PRODUCTOS Y SOLUCIONES
EN REDES DE FLUIDOS

PRODUCTS AND SOLUTIONS
IN FLOW SYSTEMS

VALVULAS MARIPOSA DOBLE EXCENTRICA

DOUBLE ECCENTRIC BUTTERFLY VALVE

Fondon global

DOUBLE ECCENTRIC BUTTERFLY VALVE

Sealing Principle of Double Eccentric Seal Butterfly Valve

The rotation center of disc (namely the center of valve shaft) and the centerline of body form up a 'b' eccentric on the base of single eccentric butterfly valve, making the sealing face of disc disengaged from seat sealing face more quickly than single eccentric seal butterfly valves during the process of open and close. Once disc turns to 8° ～ 12° , the disc sealing face will be completely disengaged from the seat sealing face. Once fully opened, a gap Y' will be formed up between the two sealing faces. This type of butterfly valves are designed to have greatly lowered the mechanical wear and extrusion deformation between the two sealing faces, making the sealing performance of butterfly valve much better.

The characteristic of this structure is to make stem axis not only deviated from the center of disc, but also the center of the body. The effect of double eccentric is that, when valve has been opened, disc can be quickly disengaged from seat, thus to greatly eliminate the unnecessary excessive extrusion and scratch between the disc and seat, reduce opening resistance, lower the abrasion and improve the service life of seat. As scratch has been greatly lowered, metal seat can be used for double eccentric butterfly valve, so that butterfly valves are able to be used in high temperature fields. However, as its seal is positioned sealing construction, i.e. the sealing faces disc and seat is line contact, disc extruding seat to produce elastic deformation, thus to effect the sealing performance. This has high requirement on close position, especially for those with metal seat, and is given poor pressure endurance. This is why butterfly valves are, conventionally, not resistant to high temperature and leakage.

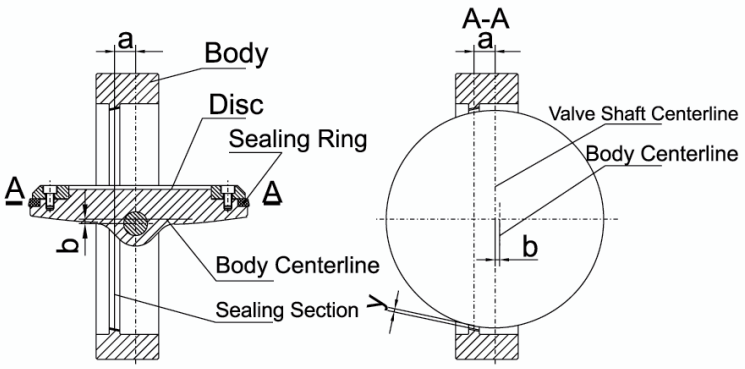

Sealing Structure of Double Eccentric Seal Butterfly Valve

Working Principle

1、Disc closed, medium enters from the upstream of seat. Under the force of medium, sealing ring will get close to the sealing face of disc, and the elasticity and deformation of sealing ring will function to guarantee the sealing performance.

2、Disc closed, medium enters from the downstream of seat. Under the extrusion of press board ring, sealing will overcome the acting force of medium and get close to the sealing face of disc, thus to guarantee the sealing performance.

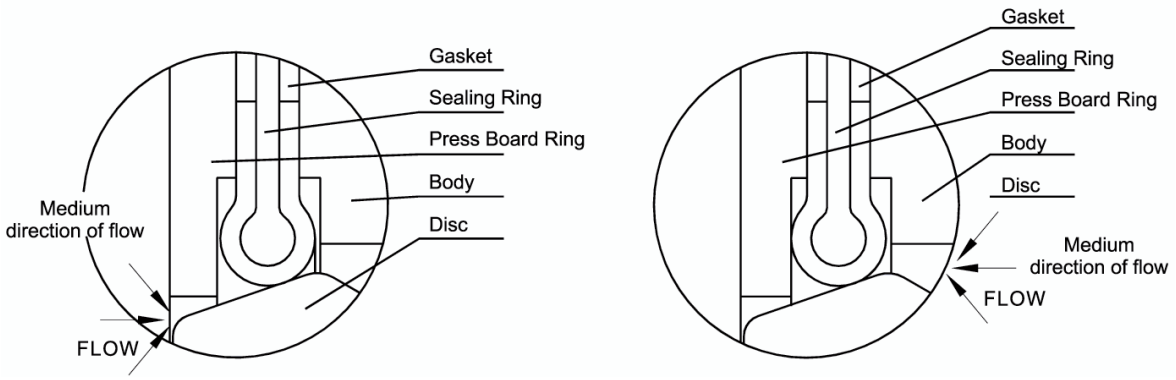

DOUBLE ECCENTRIC BUTTERFLY VALVE

High Performance Fire-safe Butterfly Valve

Soft seal seat, made of TFE, PTFE or RTFE, fireproof construction conforming to API607 fire test, provided with sealing property in case of fire.

Hard seal structure is provided with intrinsical fireproof property. Two-way leak-proof seal. Seat replaced with no need to take off disc and stem. The upper and lower stems provided with low-friction sleevesto lower the frictional force of stem when valve is opened or closed.

Double eccentricstructure lowers the abrasion at the upper and lower ends of sealin caseof frequent open and closeThe interface between valve and drive unit conforms to ISO521. Product quality is under rigorous control according to ISO9001.

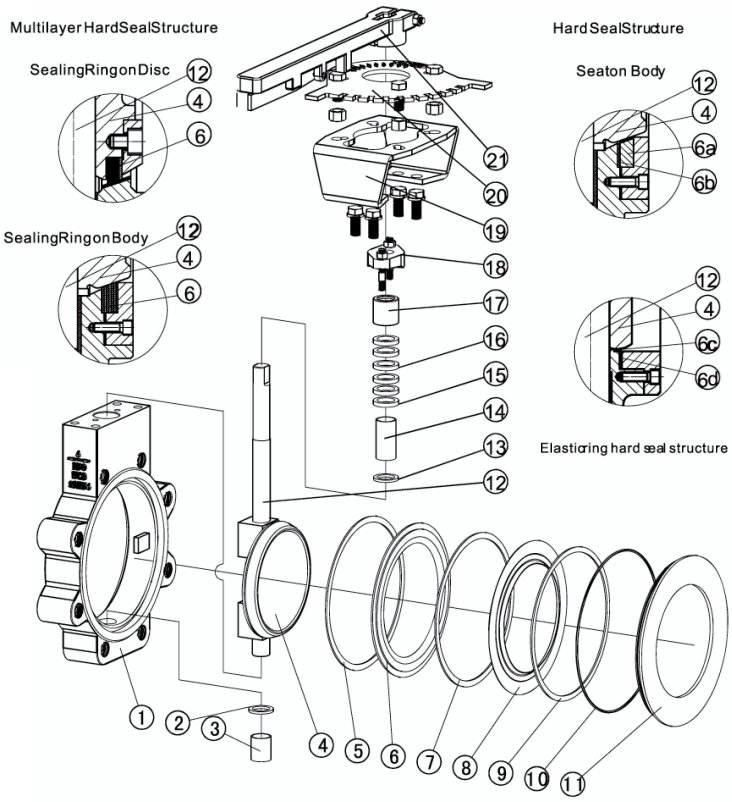

Materials list(high performance fire-safe butterfly valve)

No.	Part Name	Materials	Optional Materials
1	Body	Cast Steel	SS、Monel
2	Spacer	SS	SS、Monel
3	Bushing	PTFE+Bronze	Luberized Bronze
4	Disc	Cast Steel	SS、Monel
5	Gasket	Graphite	
6	Seal Ring	PTFE/PTFE+SS	SS+ Graphite
6a	Seat	Carbon Steel+13Cr	SS、Monel
6b	Gasket	Graphite	
6c	Seal Ring	SS	-
6d	Gasket	Graphite	
7	Gasket	Graphite	
8	Metalseat tongue	SS	-
9	Gasket	Graphite	
10	Retainer	NBR	FPM
11	Retainer Flange	Carbon Steel	SS、Monel
12	Stem	SS	316、Monel
13	Spacer	SS	SS、Monel
14	Bushing	PTFE+Bronze	Luberized Bronze
15	Packing Seat	SS	SS、Monel
16	Packing	Graphite	PTFE
17	Gland	Carbon Steel	SS
18	Packing Bushing	SS	SS
19	Yoke	Carbon Steel	-
20	Limit Disc	Carbon Steel	SS
21	Lever	Carbon Steel	-

DOUBLE ECCENTRIC BUTTERFLY VALVE

Flange Double Eccentric Butterfly Valve

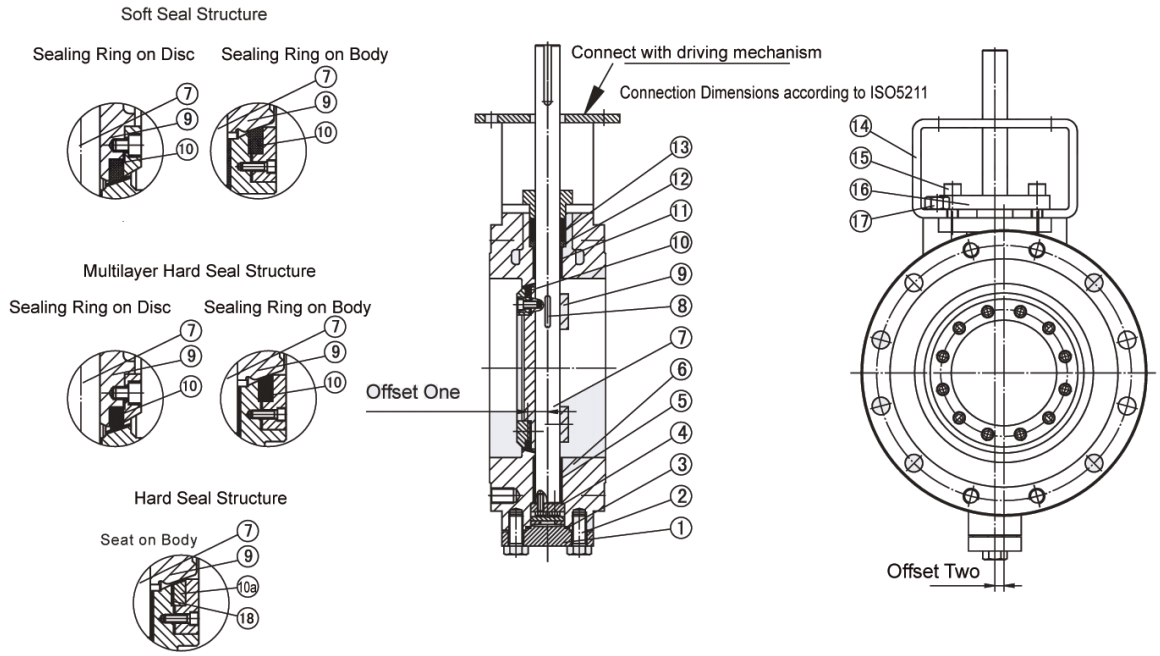

Materials list (Flange butterfly valve)

No.	Part Name	Materials	Optional Materials
1	Cover	Carbon Steel	SS、Monel
2	Bolt	Alloy Steel	SS、Monel
3	Gasket	Graphite	
4	Spacer	SS	SS、Monel
5	Bushing	PTFE+Bronze	Luberized Bronze
6	Body	Cast Steel	SS、Monel
7	Stem	SS	316、Monel
8	Key	SS	SS、Monel
9	Disc	Cast Steel	SS、Monel
10	Seal Ring	PTFE+SS	NBR/SS+ Graphite
10a	Seat	Carbon Steel+13Cr	SS、Monel
11	Bushing	PTFE+Bronze	Luberized Bronze
12	Packing Seat	SS	SS、Monel
13	Packing	Graphite	PTFE
14	Yoke	Carbon Steel	-
15	Bolt	Alloy Steel	SS、Monel
16	Gland	Carbon Steel	SS
17	Bolt	Alloy Steel	SS、Monel
18	Gasket	Graphite	

DOUBLE ECCENTRIC BUTTERFLY VALVE

Welding Double Eccentric Butterfly Valve

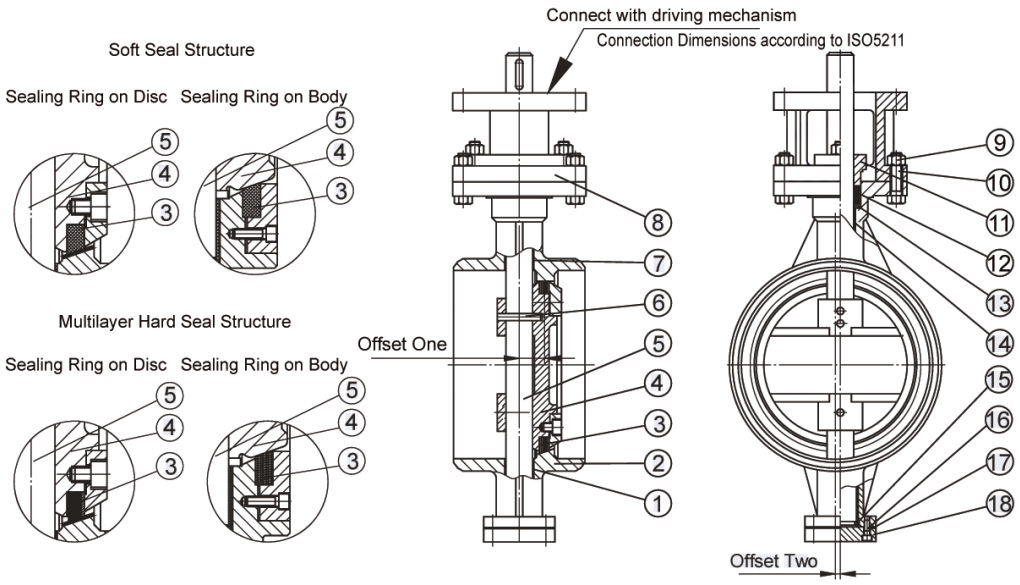

Materials list(welding butterfly valve)

No.	Part Name	Materials	Optional Materials
1	Bushing	PTFE+Bronze	Luberized Bronze
2	Body	Cast Steel	SS、Monel
3	Seal Ring	PTFE+SS	NBR/SS+ Graphite
4	Disc	Cast Steel	SS、Monel
5	Stem	SS	316、Monel
6	Pin	SS	SS、Monel
7	Bushing	PTFE+Bronze	Luberized Bronze
8	Yoke	Carbon Steel	-
9	Nut	Carbon Steel	Alloy Steel、SS
10	Bolt	Alloy Steel	SS、Monel
11	Gland	Carbon Steel	SS
12	Packing	Graphite	PTFE
13	Packing Seat	SS	SS、Monel
14	Bushing	PTFE+Bronze	Luberized Bronze
15	Half Ring	SS	316、Monel
16	Bolt	Alloy Steel	SS、Monel
17	Gasket	Graphite	
18	Cover	Carbon Steel	SS

DOUBLE ECCENTRIC BUTTERFLY VALVE

Expansion Butterfly Valve

Expansion butterfly valve is given the functions of flanged butterfly valve and pipe expansion joint, performed not only to throttle, but also to eliminate the internal force produced by temperature difference, namely expansion action.

It is used to adjust and cut off the flow of all noncorrosive gas, liquid and semiliquid in the industries of electric power, metallurgy, petroleum, chemical, gas, heat supply, hydropower, papermaking, textile, medicine, foodstuff, water supply and drainage, energy sources and etc., and used on solid particle pipes and containers. Mounted randomly at any positions regardless of the types of medium and the direction of flow, it can also be used to adjust the space between the two flanges upon the installation of valve.

Features of Expansion Butterfly Valve

1、Original design and distinctive structure.
2、Small sizes and light weight.
3、Labor-saving operation and quick open-close.
4、Adjustable and replaceable seal, dependable sealing, low fluid resistance, and energy conservation.

Installation Instructions of Expansion Butterfly Valve

1、Before installation, expansion butterfly valve shall be kept horizontally flat, and away from Impact.

2、The structural length of expansion butterfly valve is kept at the minimum upon going out of factory. To install, pull it to mounting length (namely designed length).

3、In case of the space between pipes exceeds the length of expansion valve, adjust the space between pipes and never pull the expansion valve by force, as it may damage the valve.

4、Expansion butterfly valve may be mounted at any position for the purpose of temperature compensation. After pipe has been mounted, put brackets at the two ends along with the pipe axial line, thus to prevent the expansion pipe of the valve from being pulled out (Fig. 1). The bearing force of brackets is calculated as the formula below. Never take the brackets off in service.

5、When expansion butterfly valve is not used for temperature compensation, but used only for convenience of replacement and repair, it can be limited by bolts that are symmetrically fastened to closely clamp the expansion butterfly valve, thus to prevent expansion pipe from being pulled out (Fig. 2), as it may damage the expansion butterfly valve, pipeline or constructions. The diameter of bolts may be that of flange bolts. The bolt strength, bearing test pressure and pipeline tension may be calculated according to the formula above. Never take the limit bolts off in service. (Bolts are supplied otherwise).

6、Don't dismantle the expansion butterfly valve on the pipe construction site.

7、This butterfly valve is precisely machined and closely mated, and shouldn't be repeatedly pulled or pressed at random. Upon installation, the pipes at the two ends of expansion valve shall be kept concentric, and the two flange faces on pipeline shall be parallel.

8、Flange fixing bolts shall be symmetrically fastened, never fasten on single side by force.

9、Expansion pipe is mounted behind valve.

10、The expansion part of valve cannot be mounted at the corner or end of pipeline.

$F > \pi/4 * PS * DN2$ (kgf)
In this formula, PS is the test pressure of pipeline, and DN is the diameter of pipeline.

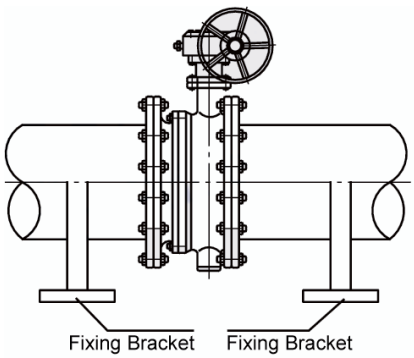

Fig. 1

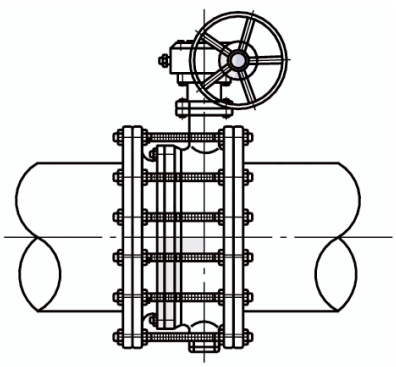

Fig. 2

DOUBLE ECCENTRIC BUTTERFLY VALVE

Double Eccentric Butterfly Valve Product Line

Size (mm)		Pressure								
DN	NPS	PN0.25MPa	PN0.6MPa	PN1.0MPa	PN1.6MPa	PN2.5MPa	PN4.0MPa	CLASS150	CLASS300	CLASS600
50	2"	●/△/★/☆	●/△/★/☆	●/△/★/☆	●/△/★/☆	●/△/★/☆	●/△/★/☆	●/△/★/☆	●/△/★/☆	●/△/★/☆
65	2-1/2"	●/△/★/☆	●/△/★/☆	●/△/★/☆	●/△/★/☆	●/△/★/☆	●/△/★/☆	●/△/★/☆	●/△/★/☆	●/△/★/☆
80	3"	●/△/★/☆	●/△/★/☆	●/△/★/☆	●/△/★/☆	●/△/★/☆	●/△/★/☆	●/△/★/☆	●/△/★/☆	●/△/★/☆
100	4"	●/△/★/☆	●/△/★/☆	●/△/★/☆	●/△/★/☆	●/△/★/☆	●/△/★/☆	●/△/★/☆	●/△/★/☆	●/△/★/☆
125	5"	●/△/★/☆	●/△/★/☆	●/△/★/☆	●/△/★/☆	●/△/★/☆	△/★/☆	●/△/★/☆	△/★/☆	△/★/☆
150	6"	●/△/★/☆	●/△/★/☆	●/△/★/☆	●/△/★/☆	●/△/★/☆	△/★/☆	●/△/★/☆	△/★/☆	△/★/☆
200	8"	△/★/☆	△/★/☆	△/★/☆	△/★/☆	△/★/☆	△/★/☆	△/★/☆	△/★/☆	△/★/☆
250	10"	△/★/☆	△/★/☆	△/★/☆	△/★/☆	△/★/☆	△/★/☆	△/★/☆	△/★/☆	△/★/☆
300	12"	△/★/☆	△/★/☆	△/★/☆	△/★/☆	△/★/☆	△/★/☆	△/★/☆	△/★/☆	△/★/☆
350	14"	△/★/☆	△/★/☆	△/★/☆	△/★/☆	△/★/☆	△/★/☆	△/★/☆	△/★/☆	/
400	16"	△/★/☆	△/★/☆	△/★/☆	△/★/☆	△/★/☆	△/★/☆	△/★/☆	△/★/☆	/
450	18"	△/★/☆	△/★/☆	△/★/☆	△/★/☆	△/★/☆	△/★/☆	△/★/☆	△/★/☆	/
500	20"	△/★/☆	△/★/☆	△/★/☆	△/★/☆	△/★/☆	△/★/☆	△/★/☆	△/★/☆	/
600	24"	△/★/☆	△/★/☆	△/★/☆	△/★/☆	△/★/☆	△/★/☆	△/★/☆	△/★/☆	/
700	28"	△/★/☆	△/★/☆	△/★/☆	△/★/☆	△/★/☆	★/☆	★/☆	/	/
750	30"	△/★/☆	△/★/☆	△/★/☆	△/★/☆	△/★/☆	★/☆	★/☆	/	/
800	32"	△/★/☆	△/★/☆	△/★/☆	△/★/☆	△/★/☆	★/☆	★/☆	/	/
900	36"	△/★/☆	△/★/☆	△/★/☆	△/★/☆	△/★/☆	/	★/☆	/	/
1000	40"	△/★/☆	△/★/☆	△/★/☆	★/☆	★/☆	/	★/☆	/	/
1050	42"	△/★/☆	△/★/☆	△/★/☆	★/☆	★/☆	/	★/☆	/	/
1100	44"	★/☆	★/☆	★/☆	★/☆	★/☆	/	★/☆	/	/
1200	48"	★/☆	★/☆	★/☆	★/☆	★/☆	/	★/☆	/	/
1300	52"	★/☆	★/☆	★/☆	★/☆	/	/	★/☆	/	/
1400	56"	★/☆	★/☆	★/☆	★/☆	/	/	★/☆	/	/
1500	60"	★/☆	★/☆	★/☆	★/☆	/	/	/	/	/
1600	64"	★/☆	★/☆	★/☆	★/☆	/	/	/	/	/
1800	72"	★/☆	★/☆	★/☆	/	/	/	/	/	/
2000	80"	★/☆	★/☆	★/☆	/	/	/	/	/	/
2200	88"	★/☆	★/☆	★/☆	/	/	/	/	/	/
2400	96"	★/☆	★/☆	★/☆	/	/	/	/	/	/
2600	104"	★/☆	★/☆	/	/	/	/	/	/	/
2800	112"	★/☆	★/☆	/	/	/	/	/	/	/
3000	120"	★/☆	★/☆	/	/	/	/	/	/	/
3200	128"	★/☆	/	/	/	/	/	/	/	/
3400	136"	★/☆	/	/	/	/	/	/	/	/
3600	144"	★/☆	/	/	/	/	/	/	/	/
3800	152"	★/☆	/	/	/	/	/	/	/	/
4000	160"	★/☆	/	/	/	/	/	/	/	/

Note: ● stands for handle operated valves; ☆stands for gearbox operated valves;
△ stands for air operated valves; ★stands for electrically operated valves;
/ stands for no option of this.
Those not covered in the table can be custom made to users' requirements.

Technical Specification

Design Standard		GB/T12238						API609		
Pressure-Temperature Rating		GB/T12224						API609,ASME B16.34		
Face-Face		GB/T12221						API609,ISO5752,ASME B16.10		
Flange Ends		GB/T9113 、 JB/T79						ASME B16.5\B16.47		
Inspection &Test		JB/T9092 、 GB/T13927						API598		
NorminalPressure(MPa)		0.25	0.6	1.0	1.6	2.5	4.0	CLASS150	CLASS300	CLASS600
Test Pressure	Shell Test	0.375	0.9	1.5	2.4	3.75	6.0	2.93	7.58	15.0
	High Pressure Seal Test	0.275	0.66	1.1	1.76	2.75	4.4	2.07	5.52	11.03
	Low Pressure Seal Test	0.6						0.6		

Applicable Temperature	Different raw material for different work temperature
Applicable Medium	Water oil gas and other causticity medium(Different raw material for different medium)

DOUBLE ECCENTRIC BUTTERFLY VALVE

Wafer Type PN 0.6MPa

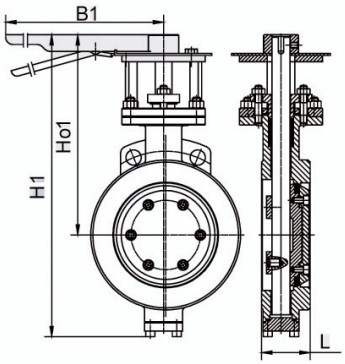

Manual Wafer Butterfly Valve

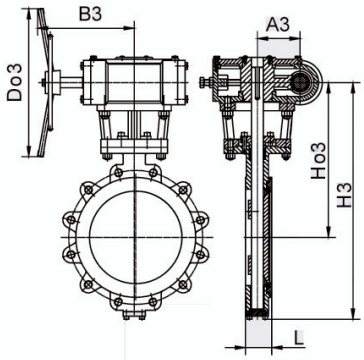

Worm Gear Driven Lug Wafer Butterfly Valve

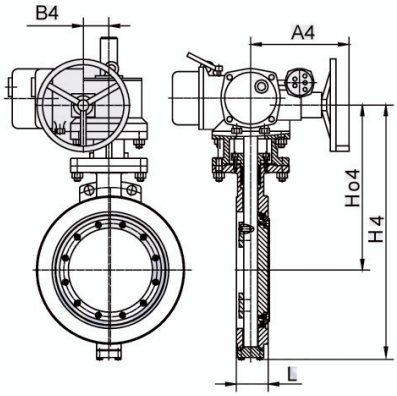

Electric Wafer Butterfly Valve

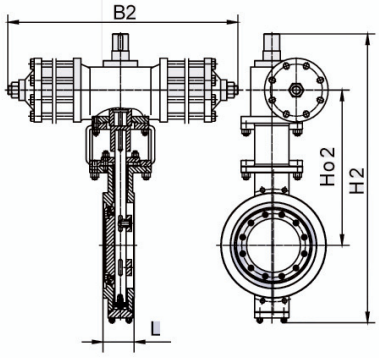

Pneumatic Wafer Butterfly Valve

Main Outline Dimensions

PN 0.6MPa mm

DN	L		Manual			Pneumatic			Gear					Electric				Weight(kg)	
	Series1	Series2	H1	Ho1	B1	H2	Ho2	B2	H3	Ho3	B3	A3	Do3	H4	Ho4	B4	A4	WF	WL
50	43	43	233	160	200	-	-	-	266	143	106	50	160	-	-	-	-	4.5	5.5
65	46	46	275	179	230	-	-	-	290	178	140	63	180	-	-	-	-	5	7
80	49	64	316	198	250	-	-	-	320	185	140	63	180	320	185	178	180	6	9
100	56	64	341	211	270	-	-	-	342	193	140	63	240	340	198	178	180	8	11.5
125	64	70	362	217	300	-	-	-	378	219	140	63	240	340	205	178	180	12	17
150	70	76	384	235	350	-	-	-	415	246	140	63	240	415	241	178	180	13	22
200	71	84	-	-	-	695	325	275	470	298	170	84	300	512	263	235	370	20	39
250	76	114	-	-	-	750	355	275	535	328	170	84	300	570	292	235	370	30	47
300	83	114	-	-	-	935	475	378	606	365	200	108	400	668	340	235	370	51	68
350	92	127	-	-	-	1000	510	378	695	408	200	108	400	745	385	235	370	82	135
400	102	140	-	-	-	1145	590	378	755	446	240	128	400	827	425	235	370	115	187
450	114	152	-	-	-	1205	632	530	815	475	330	152	600	915	462	235	370	156	225
500	127	152	-	-	-	1256	665	530	905	525	370	168	600	995	500	235	370	199	260
600	154	178	-	-	-	1526	830	530	1050	610	370	320	600	1183	605	245	515	333	383
700	165	229	-	-	-	1640	903	530	1276	795	515	237	800	1460	734	245	515	462	510
800	190	241	-	-	-	1786	972	680	1384	837	515	237	800	1589	803	245	515	740	920
900	203	241	-	-	-	1917	1052	680	1500	885	515	237	800	1856	990	360	540	701	1189
1000	216	300	-	-	-	2600	1170	680	1620	946	570	785	600	1958	1050	360	540	786	1220
1200	254	360	-	-	-	-	-	-	2185	1165	570	785	600	2013	1165	360	540	907	1660

DOUBLE ECCENTRIC BUTTERFLY VALVE

Wafer Type PN1.0~1.6MPa

Main Outline Dimensions

PN 1.0MPa mm

DN	L		Manual			Pneumatic			Gear					Etectric				Weight(kg)	
	Series1	Series2	H1	Ho1	B1	H2	Ho2	B2	H3	Ho3	B3	A3	Do3	H4	Ho4	B4	A4	WF	WL
50	43	43	233	160	200	-	-	-	266	143	106	50	160	-	-	-	-	4.5	5.5
65	46	46	275	179	230	-	-	-	290	178	140	63	180	-	-	-	-	5	7
80	49	64	316	198	250	-	-	-	320	185	140	63	180	320	185	178	180	6	9
100	56	64	341	211	270	-	-	-	342	193	140	63	240	340	198	178	180	8	11.5
125	64	70	362	217	300	-	-	-	378	219	140	63	240	340	205	178	180	12	17
150	70	76	384	235	350	-	-	-	415	245	140	63	240	415	241	178	180	13	22
200	71	84	-	-	-	695	325	275	470	298	170	84	300	512	263	235	370	20	39
250	76	114	-	-	-	750	355	275	535	328	170	84	300	570	292	235	370	30	47
300	83	114	-	-	-	935	475	378	606	365	200	108	400	668	340	235	370	51	68
350	92	127	-	-	-	1000	510	378	695	408	200	108	400	745	385	235	370	82	135
400	102	140	-	-	-	1145	590	378	755	446	330	144	400	827	425	235	370	115	187
450	114	152	-	-	-	1205	632	530	815	475	330	144	600	915	462	235	370	156	225
500	127	152	-	-	-	1256	665	530	905	525	370	220	600	995	500	235	370	199	260
600	154	178	-	-	-	1526	830	530	1050	610	370	220	600	1183	605	245	515	333	383
700	165	229	-	-	-	1640	903	530	1276	795	515	279	800	1460	734	245	515	462	510
800	190	241	-	-	-	1786	972	680	1384	837	515	279	800	1589	803	245	515	740	920
900	203	241	-	-	-	1917	1052	680	1505	885	515	279	800	1856	990	360	540	701	1189
1000	216	300	-	-	-	2600	1170	680	1620	946	570	368	600	1958	1050	360	540	786	1220
1200	254	360	-	-	-	-	-	-	2185	1165	570	378	600	2013	1165	360	540	907	1660

PN 1.6MPa mm

DN	L		Manual			Pneumatic			Gear					Etectric				Weight(kg)	
	Series1	Series2	H1	Ho1	B1	H2	Ho2	B2	H3	Ho3	B3	A3	Do3	H4	Ho4	B4	A4	WF	WL
50	43	43	225	160	200	-	-	-	266	143	160	106	50	-	-	-	-	4.5	5.5
65	46	46	250	175	230	-	-	-	290	175	160	140	63	-	-	-	-	7	7
80	49	64	260	190	250	-	-	-	320	185	160	140	63	513	265	178	180	9	9
100	56	64	295	195	270	-	-	-	342	195	160	140	63	538	282	178	180	20	11.5
125	64	70	330	215	300	-	-	-	365	209	300	140	63	560	295	178	180	23	17
150	70	76	356	225	350	-	-	-	415	243	300	140	63	605	300	178	180	29	22
200	71	89	-	-	-	695	327	275	510	263	400	150	84	749	321	235	370	40	39
250	76	114	-	-	-	750	355	275	567	295	400	150	84	803	330	235	370	50	47
300	83	114	-	-	-	955	472	378	665	342	600	200	108	880	365	235	370	68	68
350	92	127	-	-	-	1033	515	378	739	385	600	200	108	960	410	235	370	105	138
400	102	140	-	-	-	1185	595	530	825	430	600	240	152	1032	445	235	370	163	190
450	114	152	-	-	-	1270	632	530	910	469	330	144	600	1118	487	235	370	205	230
500	127	152	-	-	-	1335	665	530	990	500	370	220	600	1190	520	235	370	270	265
600	154	178	-	-	-	1642	829	680	1210	618	370	220	600	1380	625	235	370	390	437
700	165	229	-	-	-	1785	905	680	1475	746	515	279	800	1582	745	245	515	465	740
800	190	241	-	-	-	1915	970	680	1600	810	515	279	800	1713	810	245	515	570	920
900	203	241	-	-	-	-	-	-	1870	1000	515	279	800	1870	875	360	540	701	1189
1000	216	300	-	-	-	-	-	-	2000	1065	570	368	600	2000	940	360	540	800	1220
1200	254	360	-	-	-	-	-	-	2215	1170	570	378	600	2118	1060	360	540	922	1680

DOUBLE ECCENTRIC BUTTERFLY VALVE

Wafer Type PN 2.5~4.0MPa

Main Outline Dimensions

PN 2.5MPa mm

DN	L		Manual			Pneumatic			Gear					Electric				Weight(kg)	
	Series1	Series2	H1	Ho1	B1	H2	Ho2	B2	H3	Ho3	B3	A3	Do3	H4	Ho4	B4	A4	WF	WL
50	43	43	225	160	200	-	-	-	266	143	106	50	160	-	-	-	-	6.3	6.3
65	46	46	250	175	230	-	-	-	290	175	140	63	160	-	-	-	-	9	9.2
80	49	64	260	190	250	-	-	-	513	265	63	140	160	552	265	178	180	11	11.
100	56	64	295	195	270	-	-	-	538	282	63	140	300	585	290	178	180	25	15
125	64	70	330	215	300	-	-	-	560	295	63	140	300	610	305	178	180	33	17
150	70	76	356	225	350	-	-	-	605	300	63	140	400	765	315	178	180	47	22
200	71	89	-	-	-	695	327	275	749	321	84	150	400	820	304	235	370	52	39
250	76	114	-	-	-	750	355	275	803	330	84	150	600	910	336	235	370	65	47
300	83	114	-	-	-	955	472	378	880	365	108	200	600	1000	386	235	370	68	123
350	92	127	-	-	-	1033	515	378	960	410	108	240	600	1055	425	235	370	138	190
400	102	140	-	-	-	1185	595	530	1032	445	128	240	800	1108	456	235	370	190	230
450	114	152	-	-	-	1270	632	530	1118	487	330	144	600	1140	490	235	370	230	265
500	127	152	-	-	-	1335	665	530	1190	520	370	220	600	1238	552	235	370	265	390
600	154	178	-	-	-	1642	829	680	1380	625	370	220	600	1399	635	245	515	437	465
700	165	229	-	-	-	1785	905	680	1582	745	515	279	800	1611	750	360	540	570	740
800	190	241	-	-	-	1915	970	680	1713	810	515	279	800	1782	820	360	540	705	920
900	203	241	-	-	-	-	-	-	1870	875	515	279	800	1915	886	385	565	730	1189
1000	216	300	-	-	-	-	-	-	2000	940	570	368	600	2040	945	385	565	927	1220
1200	254	362	-	-	-	-	-	-	2118	1060	570	378	600	2184	1053	400	770	953	1680

PN 4.0MPa mm

DN	L		Manual			Pneumatic			Gear					Electric				Weight(kg)	
	Series1	Series2	H1	Ho1	B1	H2	Ho2	B2	H3	Ho3	B3	A3	Do3	H4	Ho4	B4	A4	WF	WL
50	43	43	225	160	200	-	-	-	266	143	106	50	200	-	-	-	-	6.3	7.3
65	46	46	265	175	230	-	-	-	290	175	143	80	250	-	-	-	-	9	9.8
80	49	64	275	190	270	-	-	-	395	245	143	80	300	530	240	178	180	11	11.5
100	56	64	310	205	300	-	-	-	356	205	200	108	400	555	205	178	180	25	29
125	64	70	347	220	350	-	-	-	375	213	200	108	400	582	215	178	180	33	38
150	70	76	374	235	380	-	-	-	439	260	200	108	600	609	260	235	370	47	51
200	71	84	-	-	-	750	375	275	520	275	330	140	600	755	275	235	370	55	67
250	76	114	-	-	-	905	445	378	600	315	330	140	600	818	315	235	370	70	70
300	83	114	-	-	-	1085	538	503	692	365	370	220	800	912	363	245	515	135	142
350	92	127	-	-	-	1160	576	503	776	408	370	220	800	983	406	245	515	203	227
400	102	140	-	-	-	1230	609	503	864	443	370	220	800	1058	440	245	515	245	268
450	114	152	-	-	-	1520	765	680	1128	525	512	279	400	1135	545	360	540	283	333
500	127	152	-	-	-	1335	665	530	1257	664	512	279	400	1245	600	360	540	405	520
600	154	229	-	-	-	-	-	-	1380	625	512	279	400	1414	663	360	540	591	645
700	165	241	-	-	-	-	-	-	1435	712	570	368	600	-	-	-	-	723	785
800	190	241	-	-	-	-	-	-	1518	782	570	368	600	-	-	-	-	846	935

Note: the weight in the table is that without drive unit. WF is wafer butterfly valve, and WL is lug wafer butterfly valve.

DOUBLE ECCENTRIC BUTTERFLY VALVE

Wafer Type CLASS 150~600

Main Outline Dimensions

CLASS 150 mm

NPS	L	Manual			Pneumatic			Gear					Etectric				Weight(kg)	
		H1	Ho1	B1	H2	Ho2	B2	H3	Ho3	B3	A3	Do3	H4	Ho4	B4	A4	WF	WL
2″	45	262	187	180	-	-	-	287	176	106	50	160	-	-	-	-	3.7	5
2-1/2″	48	267	193	200	-	-	-	294	179	140	63	160	-	-	-	-	4.3	5.6
3″	49	295	218	250	-	-	-	320	185	140	63	160	513	263	178	180	5	6
4″	54	329	239	270	-	-	-	342	195	140	63	160	535	282	178	180	7.7	11
5″	57	369	261	300	-	-	-	365	209	140	63	300	563	293	178	180	9.1	13.6
6″	58	398	275	350	-	-	-	415	243	140	63	300	602	322	178	180	13.6	15.9
8″	64	-	-	-	690	323	275	510	263	150	84	400	745	296	235	370	20	21.8
10″	71	-	-	-	750	355	275	567	295	150	84	400	805	325	235	370	32	41
12″	81	-	-	-	955	475	378	665	342	200	108	600	883	365	235	370	50	57.6
14″	92	-	-	-	1032	513	378	739	385	200	108	600	965	408	235	370	61	83
16″	102	-	-	-	1182	598	530	825	430	240	152	600	1033	443	235	370	83	113
18″	114	-	-	-	1265	635	530	910	469	240	152	800	1120	485	235	370	106	138
20″	127	-	-	-	1335	667	530	990	500	300	168	800	1186	518	235	370	145	188
24″	154	-	-	-	1642	830	680	1210	618	320	192	800	1380	625	235	370	229	318
30″	165	-	-	-	1823	1245	680	1453	875	512	279	400	1583	1005	245	515	420	513
36″	203	-	-	-	2145	1329	860	1775	939	512	279	400	1905	1089	245	515	739	857
42″	219	-	-	-	2360	1456	860	1980	1086	512	279	400	2120	1216	360	540	1123	1225
48″	254	-	-	-	2535	1564	1080	2165	1194	570	368	600	2235	1324	360	540	1277	1399

CLASS 300 mm

NPS	L	Manual			Pneumatic			Gear					Etectric				Weight(kg)	
		H1	Ho1	B1	H2	Ho2	B2	H3	Ho3	B3	A3	Do3	H4	Ho4	B4	A4	WF	WL
2″	45	262	179	230	-	-	-	287	176	106	50	160	-	-	-	-	3.6	5
2-1/2″	48	269	193	260	-	-	-	294	179	140	63	160	-	-	-	-	4.2	5.5
3″	49	293	198	290	-	-	-	320	185	140	63	160	513	263	178	180	5.4	7.7
4″	54	310	203	320	-	-	-	342	195	140	63	160	535	282	178	180	7.7	10.9
5″	57	352	225	350	-	-	-	365	209	140	63	300	563	293	178	180	9.1	13.6
6″	59	380	235	380	-	-	-	415	243	140	63	300	602	322	178	180	13.6	22.2
8″	73	-	-	-	750	368	275	510	263	150	84	400	745	296	235	370	23.6	36
10″	83	-	-	-	909	442	378	567	295	150	84	400	805	325	235	370	40	52
12″	92	-	-	-	1075	535	530	665	342	200	108	600	883	365	235	370	69.4	90
14″	117	-	-	-	1158	572	530	739	385	200	108	600	965	408	235	370	129	147
16″	133	-	-	-	1230	610	530	825	430	240	152	600	1033	443	235	370	152	182
18″	149	-	-	-	1462	736	680	910	469	240	152	800	1120	485	235	370	178	234.5
20″	159	-	-	-	1328	765	680	990	500	300	168	800	1186	518	235	370	231	333
24″	181	-	-	-	-	-	-	1210	618	320	192	800	1380	625	235	370	332	463

CLASS 600 mm

NPS	L	Manual			Pneumatic			Gear					Etectric				Weight(kg)	
		H1	Ho1	B1	H2	Ho2	B2	H3	Ho3	B3	A3	Do3	H4	Ho4	B4	A4	WF	WL
2″	45	262	179	230	-	-	-	287	176	106	50	160	-	-	-	-	5	5.9
2-1/2″	48	269	193	260	-	-	-	294	179	140	63	160	-	-	-	-	5	5.9
3″	64	293	198	290	-	-	-	320	185	140	63	160	513	263	178	180	5.9	8.2
4″	64	310	203	320	-	-	-	342	195	140	63	160	535	282	178	180	13.6	23.6
5″	70	352	225	350	-	-	-	365	209	140	63	300	563	293	178	180	27	40
6″	78	380	235	380	-	-	-	415	243	140	63	300	602	322	178	180	32	51
8″	102	-	-	-	750	368	275	510	263	150	84	400	745	296	235	370	54	90
10″	117	-	-	-	909	442	378	567	295	150	84	400	805	325	235	370	77	105.7
12″	140	-	-	-	1075	535	530	665	342	200	108	600	883	365	235	370	111	172
14″	155	-	-	-	1158	572	530	739	385	200	108	600	965	408	235	370	200	286
16″	178	-	-	-	1230	610	530	825	430	240	152	600	1033	443	235	370	286	381

Note: the weight in the table is that without drive unit. WF is wafer butterfly valve, and WL is lug wafer butterfly valve.

DOUBLE ECCENTRIC BUTTERFLY VALVE

Fabrication Structure PN 0.25MPa

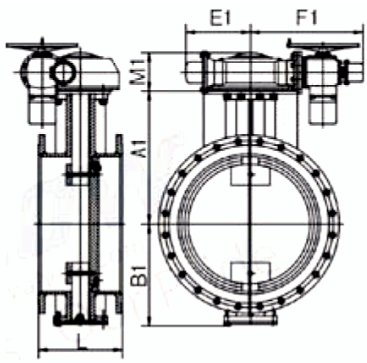

Electric Flanged Connection
Double Eccentric Soft Seal Butterfly Valve

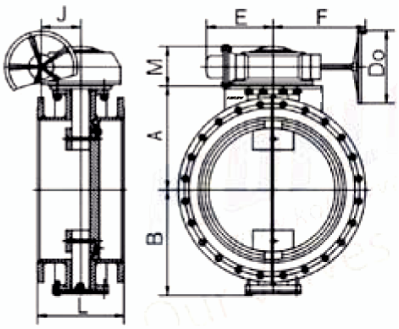

Worm Gear Driven Flange
Connected Double
Eccentric Soft Seal Butterfly Valve

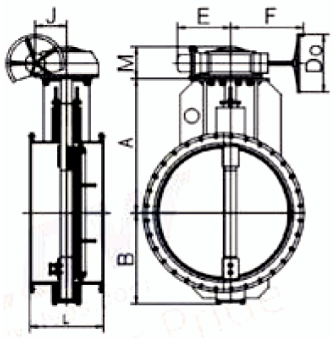

Electric Flanged Connection
Double Eccentric Hard Seal Butterfly Valve

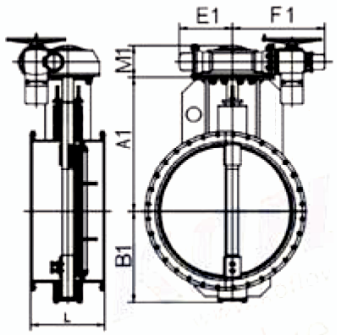

Worm Gear Driven Flange
Connected Double
Eccentric Hard Seal Butterfly Valve

Main Outline Dimensions

PN 0.25MPa mm

DN	L	Gear							Etectric					Weight(kg)	
		A	B	E	F	J	M	Do	A1	B1	E1	F1	M1	Worm	Etectric
1100	590	711	690	245	400	145	185	320	711	690	245	575	185	1370	1385
1200	630	785	750	245	400	145	185	320	785	750	245	575	185	1535	1550
1300	670	839	800	245	400	145	185	320	839	800	245	575	185	1690	1705
1400	710	887	850	245	400	145	185	320	887	850	245	575	185	1950	1965
1500	750	939	900	310	460	191	220	400	939	900	310	635	220	2330	2345
1600	790	989	950	310	460	191	220	400	989	950	310	635	220	2660	2675
1800	870	1098	1075	310	460	191	220	400	1098	1075	310	635	220	3430	3445
2000	950	1229	1190	410	555	270	255	400	1229	1190	410	730	255	4430	4445
2200	1030	1327	1290	410	555	270	255	400	1327	1290	410	730	255	5600	5615
2400	1110	1445	1395	410	555	270	255	400	1445	1395	410	730	255	6540	6555
2600	1190	1549	1495	520	640	351	320	400	1549	1495	520	817	320	8600	8615
2800	1270	1668	1625	520	640	351	320	400	1668	1625	520	817	320	9910	9925
3000	1350	1804	1745	520	640	351	320	400	1804	1745	520	817	320	11600	11615
3200	1430	1904	1845	520	640	351	320	400	1904	1845	520	857	320	13530	13575
3400	1510	2024	1965	450	785	440	355	630	2024	1965	450	975	355	15330	15380
3600	1590	2124	2065	450	785	440	355	630	2124	2065	450	975	355	17100	17150
3800	1670	2244	2185	450	785	440	355	630	2244	2185	450	975	355	18700	18750
4000	1750	2374	2315	450	785	440	355	630	2374	2315	450	975	355	20500	20690

DOUBLE ECCENTRIC BUTTERFLY VALVE

Fabrication Structure PN 0.6~1.0MPa

Main Outline Dimensions

PN 0.6MPa mm

DN	L	Gear							Etectric					Weight(kg)	
		A	B	E	F	J	M	Do	A1	B1	E1	F1	M1	Worm	Etectric
400	310	316	295	90	205	83	134	250	316	295	90	385	134	185	200
450	330	341	320	90	205	83	134	250	341	320	90	385	134	285	300
500	350	376	350	120	265	141	159	250	376	350	120	446	159	335	350
600	390	426	400	120	265	141	159	250	426	400	120	446	159	415	435
700	430	494	465	185	250	115	163	315	494	465	185	430	163	545	665
750	450	526	500	185	250	115	163	315	526	500	185	430	163	655	675
800	470	551	525	185	250	115	163	315	551	525	185	430	163	685	705
900	510	611	590	245	400	145	185	315	611	590	245	575	185	895	915
1000	550	661	640	245	400	145	185	315	661	640	245	575	185	1265	1285
1100	590	739	700	245	400	145	185	315	739	700	245	575	185	1545	1565
1200	630	789	750	310	460	191	220	400	789	750	310	635	220	1710	1730
1300	670	840	800	310	460	191	220	400	839	800	310	635	220	2350	2370
1400	710	900	875	310	460	191	220	400	899	875	310	635	220	2480	2500
1500	750	979	940	410	555	270	255	400	979	940	410	730	255	3020	3040
1600	790	1030	990	410	555	270	255	400	1029	990	410	730	255	3610	3630
1800	870	1150	1095	520	640	351	320	400	1149	1095	520	817	320	4730	4750
2000	950	1250	1195	520	640	351	320	400	1249	1195	520	817	320	5860	5880
2200	1030	1370	1325	520	640	351	320	400	1369	1325	520	817	320	7210	7230
2400	1110	1505	1445	520	640	351	320	400	1504	1445	520	857	320	9110	9155
2600	1190	1625	1565	450	785	440	335	630	1624	1565	450	973	335	10000	10050
2800	1270	1745	1685	450	785	440	335	630	1744	1685	450	993	335	11600	11680
3000	1350	1875	1815	450	785	440	335	630	1874	1815	450	993	335	13600	13680

PN1.0MPa mm

DN	L	Gear							Etectric					Weight(kg)	
		A	B	E	F	J	M	Do	A1	B1	E1	F1	M1	Worm	Etectric
400	310	326	300	120	265	141	159	250	326	300	120	446	159	215	230
450	330	351	325	120	265	141	159	250	351	325	120	446	159	305	320
500	350	394	365	120	265	141	159	250	394	365	120	446	159	375	395
600	390	461	415	185	250	115	163	315	461	415	185	430	163	475	495
700	430	501	475	185	250	115	163	315	501	475	185	430	163	675	695
750	450	536	515	245	400	145	185	315	536	515	245	575	185	865	885
800	470	561	540	245	400	145	185	315	561	540	245	575	185	935	955
900	510	639	600	245	400	145	185	315	639	600	245	575	185	1205	1225
1000	550	689	650	310	460	191	220	400	689	650	310	635	220	1540	1560
1100	590	749	725	310	460	191	220	400	749	725	310	635	220	1840	1860
1200	630	829	790	410	555	270	255	400	829	790	410	730	255	2470	2490
1300	670	879	840	410	555	270	255	400	879	840	410	730	255	2950	2970
1400	710	949	895	410	555	270	255	400	949	895	410	730	255	3210	3230
1500	750	999	945	520	640	351	320	400	999	945	520	817	320	3750	3770
1600	790	1070	1025	520	640	351	320	400	1070	1025	520	817	320	4370	4390
1800	870	1205	1145	520	640	351	320	400	1205	1145	520	817	320	5310	5330
2000	950	1325	1265	450	785	440	335	630	1325	1265	450	973	335	6400	6450
2200	1030	1445	1385	450	785	440	335	630	1445	1385	450	973	335	8400	8400
2400	1110	1575	1515	450	785	440	335	630	1575	1515	450	973	335	10200	10200

Note: 1、The valve in the table is fabrication structure.
2、The stem of DN≥600 soft seal valve is two-piece type; the stem of hard seal valve is one-piece type.

DOUBLE ECCENTRIC BUTTERFLY VALVE

Fabrication Structure PN 1.6~2.5MPa

Main Outline Dimensions

PN 1.6MPa mm

DN	L	Gear							Etectric					Weight(kg)	
		A	B	E	F	J	M	Do	A1	B1	E1	F1	M1	Worm	Etectric
80	180	158	125	90	205	83	115	200	158	125	90	385	115	46	62
100	190	163	130	90	205	83	115	200	163	130	90	385	115	51	67
125	200	173	140	90	205	83	115	200	173	140	90	385	115	56	73
150	210	185	155	90	205	83	115	200	185	155	90	385	115	61	78
200	230	209	180	90	205	83	115	200	209	180	90	385	115	81	98
250	250	243	220	90	205	83	134	250	243	220	90	385	134	125	140
300	270	268	245	90	205	83	134	250	268	245	90	385	134	155	170
350	290	301	275	120	265	141	159	250	301	275	120	446	159	205	220
400	310	343	300	120	265	141	159	250	343	300	120	446	159	285	305
450	330	369	340	185	250	115	163	250	369	340	185	430	163	340	365
500	350	401	375	185	250	115	163	315	401	375	185	430	163	465	485
600	390	461	400	245	400	145	185	315	461	400	245	575	185	665	685
700	430	539	500	245	400	145	185	315	539	500	245	575	185	845	865
750	450	564	525	245	400	145	185	315	564	525	245	575	185	985	1005
800	470	589	550	310	460	191	220	315	589	550	310	635	185	1310	1330
900	510	649	625	310	460	191	220	400	649	625	310	635	220	1540	1560
1000	550	729	690	410	55	270	255	400	729	690	410	730	220	1990	2010
1100	590	799	745	410	55	270	255	400	799	745	410	730	255	2330	2350
1200	630	849	795	410	55	270	255	400	849	795	410	730	255	2650	2670
1300	670	919	875	520	640	351	320	400	919	875	520	817	255	3210	3230
1400	710	1005	945	520	640	351	320	400	1005	945	520	817	320	3510	3530
1500	750	1075	1015	520	640	351	320	400	1075	1015	520	817	320	4000	4020
1600	790	1125	1065	520	785	440	335	630	1125	1065	520	973	320	4800	4850

PN2.5MPa mm

DN	L	Gear							Etectric					Weight(kg)	
		A	B	E	F	J	M	Do	A1	B1	E1	F1	M1	Worm	Etectric
80	180	158	125	90	205	83	115	200	158	125	90	385	115	46	62
100	190	163	130	90	205	83	115	200	163	130	90	385	115	51	67
125	200	173	140	90	205	83	115	200	173	140	90	385	115	56	73
150	210	185	155	90	205	83	115	200	185	155	90	385	115	61	78
200	230	217	195	90	205	83	134	250	217	195	90	385	134	96	110
250	250	260	220	90	205	83	134	250	260	220	90	385	134	140	165
300	270	295	250	120	250	115	159	250	295	250	120	446	159	165	180
350	290	319	290	120	250	115	159	250	319	290	120	446	159	250	270
400	310	368	325	185	265	141	163	315	368	325	185	430	164	325	345
450	330	376	350	185	265	141	163	315	376	350	185	430	164	445	465
500	350	411	390	245	400	145	185	315	411	390	245	575	185	505	525
600	390	489	450	245	400	145	185	315	489	450	245	575	185	735	755
700	430	539	500	310	460	191	220	400	539	500	310	635	220	980	1000
750	450	574	550	310	460	191	220	400	574	550	310	635	220	1170	1190
800	470	629	590	410	555	270	255	400	629	590	410	730	256	1650	1670
900	510	699	645	410	555	270	255	400	699	645	410	730	256	1910	1930
1000	550	749	695	410	555	270	255	400	749	695	410	730	256	2310	2330
1100	590	819	775	520	640	351	320	400	819	775	520	817	320	2910	2930
1200	630	905	845	520	640	351	320	400	905	845	520	817	320	3210	3230

Note: 1、The valve in the table is fabrication structure.
2、The stem of DN≥600 soft seal valve is two-piece type; the stem of hard seal valve is one-piece type.

DOUBLE ECCENTRIC BUTTERFLY VALVE

Fabrication Structure PN 4.0 & CLASS 150

Main Outline Dimensions

PN 4.0MPa mm

DN	L	Gear							Etectric					Weight(kg)	
		A	B	E	F	J	M	Do	A1	B1	E1	F1	M1	Worm	Etectric
200	230	218	195	90	205	83	134	250	218	195	90	385	135	120	135
250	250	253	225	120	265	141	159	250	253	225	120	445	140	225	240
300	270	296	265	120	265	141	159	250	296	265	120	445	140	285	305
350	290	326	300	185	250	115	163	315	326	300	185	430	165	335	355
400	310	362	340	185	250	115	163	315	362	340	185	430	165	545	565
450	330	386	365	245	400	145	185	315	386	365	245	575	185	610	630
500	350	439	400	245	400	145	185	315	439	400	245	575	185	730	750
600	390	500	475	310	460	191	220	400	500	475	310	635	220	1180	1200
700	430	580	540	410	555	270	255	400	580	540	410	730	256	1590	1610
750	450	625	570	410	555	270	255	400	625	570	410	730	256	1960	1980
800	470	650	595	410	555	270	255	400	650	595	410	730	256	2290	2310

Note: 1、The valve in the table is fabrication structure.
2、The stem of DN≥600 soft seal valve is two-piece type; the stem of hard seal valve is one-piece type.

CLASS 150 mm

NPS	L	Gear							Etectric					Weight(kg)	
		A	B	E	F	J	M	Do	A1	B1	E1	F1	M1	Worm	Etectric
3″	180	158	125	90	205	83	115	200	158	125	90	385	115	48	63
4″	190	163	130	90	205	83	115	200	163	130	90	385	115	53	68
5″	200	173	140	90	205	83	115	200	173	140	90	385	115	58	75
6″	210	185	155	90	205	83	115	200	185	155	90	385	115	65	80
8″	230	218	195	90	205	83	115	250	218	195	90	385	115	90	105
10″	250	260	220	90	205	83	115	250	260	220	90	385	115	135	150
12″	270	295	250	120	250	141	134	250	295	250	120	446	134	160	175
14″	290	336	290	120	250	141	134	250	336	290	120	446	134	230	245
16″	310	360	315	185	265	115	159	315	360	315	185	430	159	310	330
18″	330	393	350	185	265	115	159	315	393	350	185	430	159	400	420
20″	350	428	390	185	265	145	163	315	428	390	185	575	163	490	510
24″	390	489	450	245	400	145	163	315	489	450	245	575	163	710	730
28″	430	559	500	245	400	145	185	315	559	500	245	636	185	980	1000
30″	450	574	550	310	460	191	220	400	574	550	310	636	220	1140	1160
32″	470	619	575	310	460	191	220	400	619	575	310	730	220	1550	1570
36″	510	680	640	410	555	270	255	400	680	640	410	730	255	1800	1820
40″	550	750	695	410	555	270	255	400	750	695	410	730	255	2230	2250
44″	590	800	745	410	55	270	255	400	800	745	410	817	255	2700	2720
48″	630	870	825	520	640	351	320	400	870	825	520	817	320	3010	3030
52″	670	954	895	520	640	351	320	400	954	895	520	817	320	4080	4100
56″	710	1024	965	520	640	351	320	400	1024	965	520	817	320	4470	4490
60″	750	1095	1035	450	785	440	335	630	1095	1035	450	973	335	5080	5130

Note: 1、The valve in the table is fabrication structure.
2、The stem of NPS≥24″ soft seal valve is two-piece type; that of hard seal valve is one-piece type.
3、The valve sizes in the table conform to ASME16.5 and ASME B16.47Aseries.

DOUBLE ECCENTRIC BUTTERFLY VALVE

Casted Structure PN 0.6MPa

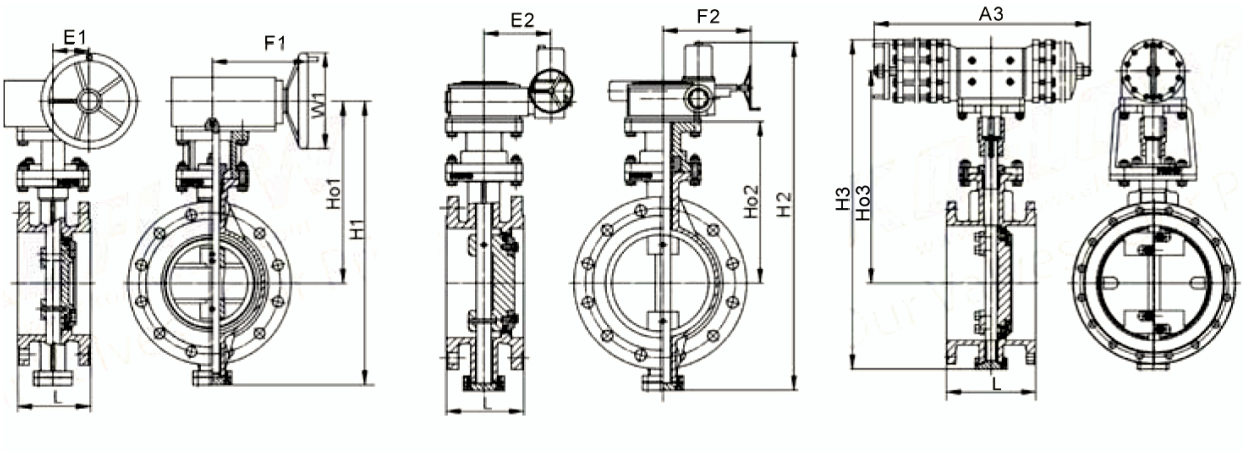

Worm Gear Flanged Butterfly Valve

Electric Driven Flanged Butterfly Valve

Pneumatic Driven Flanged Butterfly Valve

Main Outline Dimensions

PN0.6MPa mm

DN	L*	Gear					Electric				Pneumatic			Weight(kg)		
		H1	Ho1	E1	F1	W1	H2	Ho2	E2	F2	H3	Ho3	A3	Worm	Electric	Pneumatic
50	108	267	172	63	140	180	-	-	-	-	-	-	-	12	42	-
65	112	290	180	63	140	180	-	-	-	-	-	-	-	13	47	-
80	114	320	190	63	140	180	320	185	178	180	-	-	-	14	50	-
100	127	342	198	63	140	240	340	198	178	180	-	-	-	17	60	-
125	140	380	223	63	140	240	380	223	178	180	-	-	-	27	80	-
150	140	415	246	63	140	300	415	241	178	180	-	-	-	29	110	-
200	152	470	298	84	170	300	512	263	235	370	695	325	275	45	130	-
250	165	535	328	84	170	400	570	292	235	370	750	355	275	69	170	-
300	178	606	365	108	200	400	668	340	235	370	935	475	378	86	200	-
350	190	695	408	108	200	400	745	385	235	370	1000	510	378	122	280	-
400	216	755	446	128	240	600	827	425	235	370	1145	590	378	141	320	-
450	222	815	475	152	240	600	915	462	235	370	1205	632	530	191	395	-
500	229	905	525	168	300	600	995	500	235	370	1256	665	530	260	500	-
600	267	1050	610	320	192	350	1183	605	245	515	1526	830	530	380	600	-
700	292	1276	795	237	192	350	1460	734	245	515	1640	903	530	450	800	-
800	318	1384	837	237	168	350	1589	803	245	515	1786	972	680	650	890	-
900	330	1500	885	237	168	450	1856	990	360	540	1917	1052	680	830	1040	-
1000	410	1620	946	785	330	450	1958	1050	360	540	2600	1170	680	1050	1400	-
1200	470	2185	1165	785	330	450	2013	1165	360	540	-	-	-	1400	1850	-
1400	530	2315	1310	785	330	450	2186	1312	360	540	-	-	-	1900	2664	-
1600	600	2675	1440	865	330	600	2531	1438	385	565	-	-	-	2900	3450	-
1800	670	2920	1580	865	550	600	2795	1580	385	565	-	-	-	4000	4450	-
2000	950	3170	1725	865	550	600	3055	1726	300	770	-	-	-	5300	5900	-
2200	1000	3415	1845	865	650	600	3269	1824	520	817	-	-	-	-	6700	-
2400	1110	3670	1972	865	650	600	3524	1959	520	817	-	-	-	-	7500	-
2600	1190	3830	2100	865	650	600	3765	2080	450	973	-	-	-	-	-	-
2800	1270	4100	2235	865	850	600	4025	2210	450	973	-	-	-	-	-	-
3000	1350	4380	2370	865	850	600	4278	2390	450	973	-	-	-	-	-	-

Structural length of valves in the table: DN<2000, to ISO5752 13 series; DN ⩾ 2000, to ISO5752 14 series.

DOUBLE ECCENTRIC BUTTERFLY VALVE

Casted Structure PN 1.0~1.6MPa

Main Outline Dimensions

PN 1.0MPa mm

DN	L*	Gear					Etectric				Pneumatic			Weight(kg)		
		H1	Ho1	E1	F1	W1	H2	Ho2	E2	F2	H3	Ho3	A3	Worm	Etectric	Pneumatic
50	108	267	172	63	140	180	-	-	-	-	-	-	-	12	42	-
65	112	290	178	63	140	180	-	-	-	-	-	-	-	13	47	-
80	114	325	185	63	140	180	320	185	180	178	-	-	-	14	50	-
100	127	345	193	63	140	240	340	198	180	178	-	-	-	17	60	-
125	140	380	219	63	140	240	382	220	180	178	-	-	-	27	80	-
150	140	415	245	63	140	240	415	241	180	178	-	-	-	29	110	-
200	152	470	298	84	170	300	512	263	370	235	740	367	275	45	130	-
250	165	535	328	84	170	300	570	292	370	235	900	443	378	69	190	-
300	178	606	365	108	200	400	668	340	370	235	990	493	378	86	210	-
350	190	695	408	108	200	400	745	385	370	235	1155	575	378	122	310	-
400	216	755	446	128	240	400	827	425	370	235	1205	600	530	141	380	-
450	222	815	475	152	240	600	915	462	370	235	1290	643	530	191	460	-
500	229	905	525	168	300	600	995	500	370	235	1395	705	530	260	580	-
600	267	1050	610	320	192	600	1183	605	515	245	1665	838	530	380	690	-
700	292	1276	795	237	192	350	1460	734	515	245	1882	942	680	450	850	-
800	318	1384	837	237	168	350	1589	803	515	245	2093	1066	680	650	1000	-
900	330	1500	885	237	168	350	1856	990	540	360	-	-	-	830	1220	-
1000	410	1620	946	785	330	450	1958	1050	540	360	-	-	-	1050	1600	-
1200	470	2185	1165	785	330	450	2013	1165	540	360	-	-	-	1400	2150	-
1400	530	2315	1310	785	330	450	2186	1312	540	360	-	-	-	1900	2610	-
1600	600	2675	1440	785	330	450	2531	1438	565	385	-	-	-	2900	3450	-
1800	670	2920	1580	865	550	600	2795	1580	565	385	-	-	-	4000	4900	-
2000	950	3170	1725	865	550	600	3055	1726	770	300	-	-	-	5300	5900	-
2200	1000	3340	1935	440	650	800	3365	1980	973	450	-	-	-	-	8368	-
2400	1110	3625	2110	440	650	800	3655	2140	973	450	-	-	-	-	11792	-

PN1.6MPa mm

DN	L*	Gear					Etectric				Pneumatic			Weight(kg)		
		H1	Ho1	E1	F1	W1	H2	Ho2	E2	F2	H3	Ho3	A3	Worm	Etectric	Pneumatic
50	108	267	172	63	140	180	-	-	-	-	-	-	-	-	-	-
65	112	290	175	63	140	160	-	-	-	-	-	-	-	-	-	-
80	114	320	185	63	140	160	513	265	180	178	-	-	-	-	-	-
100	127	342	195	63	140	160	538	282	180	178	-	-	-	-	-	-
125	140	365	209	63	140	300	560	295	180	178	-	-	-	-	-	-
150	140	415	243	63	140	300	605	300	180	178	-	-	-	61	105	-
200	152	510	263	84	150	400	749	321	370	235	695	327	275	98	135	-
250	165	567	295	84	150	400	803	330	370	235	750	355	275	135	150	-
300	178	665	342	108	200	600	880	365	370	235	955	472	378	190	260	-
350	190	739	385	108	200	600	960	410	370	235	1033	515	378	225	325	-
400	216	825	430	152	240	600	1032	445	370	235	1185	595	530	340	405	-
450	222	910	469	152	240	800	1118	487	370	235	1270	632	530	465	490	-
500	229	990	500	168	300	800	1190	520	370	235	1335	665	530	685	700	-
600	267	1210	618	192	320	800	1380	625	370	235	1642	829	680	875	855	-
700	292	1475	746	238	237	400	1582	745	515	245	1785	905	680	1150	1150	-
800	318	1600	810	238	237	400	1713	810	515	245	1915	970	680	1365	1370	-
900	330	1870	1000	330	785	400	1870	875	540	360	-	-	-	1550	1610	-
1000	410	2000	1065	430	785	600	2000	940	540	360	-	-	-	1720	1920	-
1200	470	2215	1170	430	785	600	2118	1060	540	360	-	-	-	2260	2510	-
1400	530	2430	1319	550	865	800	2328	1325	565	385	-	-	-	2610	3000	-
1600	600	2700	1443	550	865	800	2550	1450	565	385	-	-	-	3050	4700	-
1800	670	2938	1595	650	865	800	2816	1598	770	300	-	-	-	5725	6500	-
2000	950	3210	1743	650	865	800	3065	1743	794	684	-	-	-	8040	8700	-

Structural length of valves in the table: DN<2000, to ISO5752 13 series; DN ⩾ 2000, to ISO5752 14 series.

DOUBLE ECCENTRIC BUTTERFLY VALVE

Casted Structure PN 2.5~4.0MPa

Main Outline Dimensions

PN 2.5MPa mm

DN	L*	Gear					Etectric				Pneumatic			Weight(kg)		
		H1	Ho1	E1	F1	W1	H2	Ho2	E2	F2	H3	Ho3	A3	Worm	Etectric	Pneumatic
50	108	278	178	63	140	180	-	-	-	-	-	-	-	-	-	-
65	112	305	182	63	140	160	-	-	-	-	-	-	-	-	-	-
80	114	320	185	63	140	160	552	265	180	178	-	-	-	-	-	-
100	127	350	200	63	140	300	585	290	180	178	-	-	-	-	82	-
125	140	375	210	63	140	300	610	305	180	178	-	-	-	-	105	-
150	140	425	245	63	140	400	765	315	180	178	-	-	-	-	120	-
200	152	526	270	84	150	400	820	304	370	235	740	367	275	103	135	-
250	165	590	302	84	150	600	910	336	370	235	890	443	378	128	195	-
300	178	695	360	108	200	600	1000	386	370	235	985	495	378	198	250	-
350	190	789	420	108	240	600	1055	425	370	235	1155	575	530	253	280	-
400	216	848	435	128	240	800	1108	456	370	235	1206	603	530	323	340	-
450	222	943	475	152	300	800	1140	490	370	235	1284	643	530	470	390	-
500	229	1079	550	168	320	800	1238	552	370	235	1390	705	535	600	490	-
600	267	1352	675	192	237	400	1399	635	515	245	1660	835	680	814	570	-
700	292	1495	759	685	237	400	1611	750	540	360	-	-	-	1030	780	-
800	318	1640	835	685	237	400	1782	820	540	360	-	-	-	1320	960	-
900	330	1765	886	730	785	600	1915	886	565	385	-	-	-	1550	1350	-
1000	410	1885	945	730	785	600	2040	945	565	385	-	-	-	1720	1880	-
1200	470	2100	1055	850	865	800	2184	1053	770	300	-	-	-	-	2180	-
1400	530	2325	1163	850	865	800	2375	1164	794	684	-	-	-	-	3200	-

PN4.0MPa mm

DN	L*	Gear					Etectric				Pneumatic			Weight(kg)		
		H1	Ho1	E1	F1	W1	H2	Ho2	E2	F2	H3	Ho3	A3	Worm	Etectric	Pneumatic
50	108	320	185	63	140	160	-	-	-	-	-	-	-	-	-	-
65	112	350	200	63	140	300	-	-	-	-	-	-	-	-	-	-
80	114	395	245	63	140	300	530	240	180	178	-	-	-	-	-	-
100	127	356	205	63	140	400	555	205	180	178	-	-	-	58	76	-
125	140	375	213	63	140	400	582	215	180	178	-	-	-	82	100	-
150	140	439	260	84	150	600	609	260	370	235	-	-	-	142	160	-
200	152	520	275	84	150	600	755	275	370	235	750	375	275	205	225	-
250	165	600	315	108	200	600	818	315	370	235	905	445	378	318	338	-
300	178	692	365	108	200	800	912	363	515	245	1085	538	503	379	399	-
350	190	776	408	152	240	800	983	406	515	245	1160	576	503	537	553	-
400	216	864	443	168	300	800	1058	440	515	245	1230	609	503	628	644	-
450	222	925	525	237	368	400	1111	571	515	245	1375	665	680	869	885	-
500	229	1128	571	237	368	400	1245	600	540	360	1520	765	680	1133	1149	-
600	267	1257	664	237	368	400	1336	663	540	360	-	-	-	-	-	-
700	292	1450	880	410	550	600	1414	796	730	410	-	-	-	-	-	-
800	318	1555	905	410	550	600	1451	851	730	410	-	-	-	-	-	-

*Structural length to ISO5752 13 series.

DOUBLE ECCENTRIC BUTTERFLY VALVE

Casted Structure CLASS 150

Main Outline Dimensions

CLASS 150 mm

NPS	L*	Gear					Etectric				Pneumatic			Weight(kg)		
		H1	Ho1	E1	F1	W1	H2	Ho2	E2	F2	H3	Ho3	A3	Worm	Etectric	Pneumatic
3″	180	320	185	63	140	160	513	263	180	178	-	-	-	47	63	-
4″	190	342	195	63	140	160	535	282	180	178	-	-	-	62	68	-
5″	200	365	209	63	140	300	563	293	180	178	-	-	-	71	75	-
6″	210	415	243	63	140	300	602	322	180	178	-	-	-	83	80	-
8″	230	510	263	84	150	400	745	296	370	235	690	323	275	115	105	115
10″	250	567	295	84	150	400	805	325	370	235	750	355	275	158	150	210
12″	270	665	342	108	200	600	883	365	370	235	955	475	378	233	175	250
14″	290	739	385	108	200	600	965	408	370	235	1032	513	378	265	245	330
16″	310	825	430	152	240	600	1033	443	370	235	1182	598	530	387	330	400
18″	330	910	469	152	240	800	1120	485	370	235	1265	635	530	454	420	480
20″	350	990	500	168	300	800	1186	518	370	235	1335	667	530	503	510	560
24″	390	1210	618	192	320	800	1380	625	370	235	1642	830	680	730	745	770
26″	410	1341	701	238	437	400	1541	687	515	245	1711	859	680	769	785	845
28″	430	1475	746	238	437	400	1587	745	515	245	1782	910	680	831	1000	950
30″	450	1572	815	238	437	400	1650	777	515	245	1856	942	680	907	1160	1020
32″	470	1600	874	238	437	400	1717	810	515	245	1920	975	680	1190	1570	1100
34″	490	1728	899	368	550	400	1874	872	540	360	-	-	-	1299	1700	-
36″	510	1823	937	368	550	600	1870	875	540	360	-	-	-	1463	1820	-
40″	550	1900	965	368	550	600	2030	965	540	360	-	-	-	2112	2250	-
42″	570	1963	1092	430	785	600	2052	987	540	360	-	-	-	2217	2275	-
44″	590	2199	1148	430	785	600	2078	1022	540	360	-	-	-	2485	2720	-
46″	610	2210	1178	430	785	600	2127	1065	540	360	-	-	-	2558	2600	-
48″	630	2275	1213	430	785	600	2188	1100	540	360	-	-	-	2992	3030	-
52″	670	2390	1257	430	785	600	2214	1150	565	385	-	-	-	4080	4100	-
54″	690	2406	1319	550	865	800	2270	1260	565	385	-	-	-	4275	4300	-
56″	710	2430	1355	550	865	800	2328	1325	565	385	-	-	-	4470	4490	-
60″	750	2563	1562	550	865	800	2530	1515	565	385	-	-	-	5080	5130	-

*(300Lb\600Lb) structural length to ISO5752 14 series.

DOUBLE ECCENTRIC BUTTERFLY VALVE

Casted Structure CLASS 300~600

Main Outline Dimensions

CLASS 300 mm

NPS	L	Gear				Etectric				Pneumatic			Weight(kg)		
		H1	Ho1	E1	F1	H2	Ho2	E2	F2	H3	Ho3	A3	Worm	Etectric	Pneumatic
3″	180	395	241	63	140	530	242	180	178	-	-	-	44	64	-
4″	190	355	205	63	140	552	204	180	178	-	-	-	58	76	-
5″	200	378	215	63	140	580	214	180	178	-	-	-	72	87	-
6″	210	430	260	84	150	610	259	180	178	-	-	-	82	100	-
8″	230	523	273	84	150	755	310	370	235	750	368	275	142	160	-
10″	250	600	315	108	200	816	340	370	235	909	442	378	205	225	-
12″	270	693	362	108	200	912	390	370	235	1075	535	530	318	338	-
14″	290	772	405	152	240	980	425	370	235	1158	572	530	379	399	-
16″	310	862	440	168	300	1057	460	370	235	1230	610	530	537	553	-
18″	330	960	525	192	320	1140	525	370	235	1462	736	680	628	644	-
20″	350	1158	603	237	368	1243	556	515	245	1328	765	680	869	885	-
24″	390	1320	693	237	368	1420	653	817	351	-	-	-	1133	1149	-
26″	410	1447	875	269	559	1642	800	817	351	-	-	-	1506	-	-
28″	430	1538	959	351	648	1812	904	817	351	-	-	-	2040	-	-
30″	450	1607	1095	351	648	1906	963	817	351	-	-	-	2304	-	-
32″	470	1721	1129	351	648	2021	1054	817	351	-	-	-	2636	-	-
34″	490	1790	1162	351	648	2089	1087	817	351	-	-	-	2915	-	-
36″	510	1862	1261	429	805	2327	1161	973	440	-	-	-	3636	-	-
40″	550	1986	1342	429	805	2451	1242	973	440	-	-	-	3797	-	-
42″	570	2100	1385	429	805	2515	1285	973	440	-	-	-	4172	-	-
44″	590	2175	1436	429	805	2565	1311	973	440	-	-	-	4468	-	-
46″	610	2219	1506	429	805	2609	1331	973	440	-	-	-	5116	-	-
48″	630	2303	1570	399	965	2697	1374	973	440	-	-	-	5403	-	-

CLASS 600 mm

NPS	L	Gear				Etectric				Pneumatic			Weight(kg)		
		H1	Ho1	E1	F1	H2	Ho2	E2	F2	H3	Ho3	A3	Worm	Etectric	Pneumatic
3″	180	500	250	63	140	606	295	180	178	-	-	-	82	79	-
4″	190	595	340	63	140	650	358	180	178	-	-	-	125	96	-
5″	200	680	395	108	200	695	371	180	178	-	-	-	165	154	-
6″	210	730	423	152	240	743	387	180	178	-	-	-	191	172	-
8″	230	855	445	168	300	1055	417	370	235	-	-	-	247	248	-
10″	250	1002	536	192	320	1172	465	370	235	-	-	-	413	308	-
12″	270	1150	614	237	368	1392	546	515	245	-	-	-	576	467	-
14″	290	1200	674	237	368	1475	579	515	245	-	-	-	664	585	-
16″	310	1345	823	237	368	1557	643	540	360	-	-	-	971	807	-
18″	330	1397	841	269	559	1625	673	540	360	-	-	-	1117	1003	-
20″	350	1430	978	350	645	1679	701	540	360	-	-	-	1639	1139	-
24″	390	1582	1069	350	645	1834	775	540	360	-	-	-	2082	1767	-

PRODUCTOS Y SOLUCIONES
EN REDES DE FLUIDOS

PRODUCTS AND SOLUTIONS
IN FLOW SYSTEMS

Fondon global

Fondon redes y fluidos

FLOW CONTROL APPLICATIONS
FCA
APLICACIONES PARA CONTROL DE FLUIDOS, S.L.

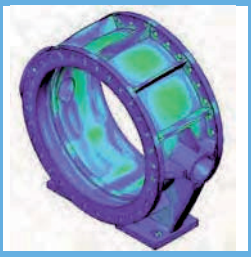

Diseño
Design

Fabricación
Manufacturing

Representación
Representation

Comercialización
Marketing

Fondon Redes y Fluidos, S.L.

Oficina Principal
email: fondon@fondon.org | Skype: FRF-comercial_esp
tel.: +34 985310351 | fax: +34 985312309
Avenida Veriña, 5 | 33211 Gijón | Asturias (España)

Oficina de representación en Cuba
email: fondon@fondon.co.cu
tel.: (537) 2042384 | 2042627
C/ 44 nº309 e /3ra y 5ta | Miramar | La Habana | Cuba

Oficina secundaria de representación en Cuba
email: fondonmoa@fondon.co.cu
tel.: (5324) 606909 | 606908
Almacenes Universales C/1ra, s/n, Reparto
Armando Mestre | Moa | Holguín | Cuba

www.fondonglobal.com