OUR GOAL
IS YOUR SUCCESS

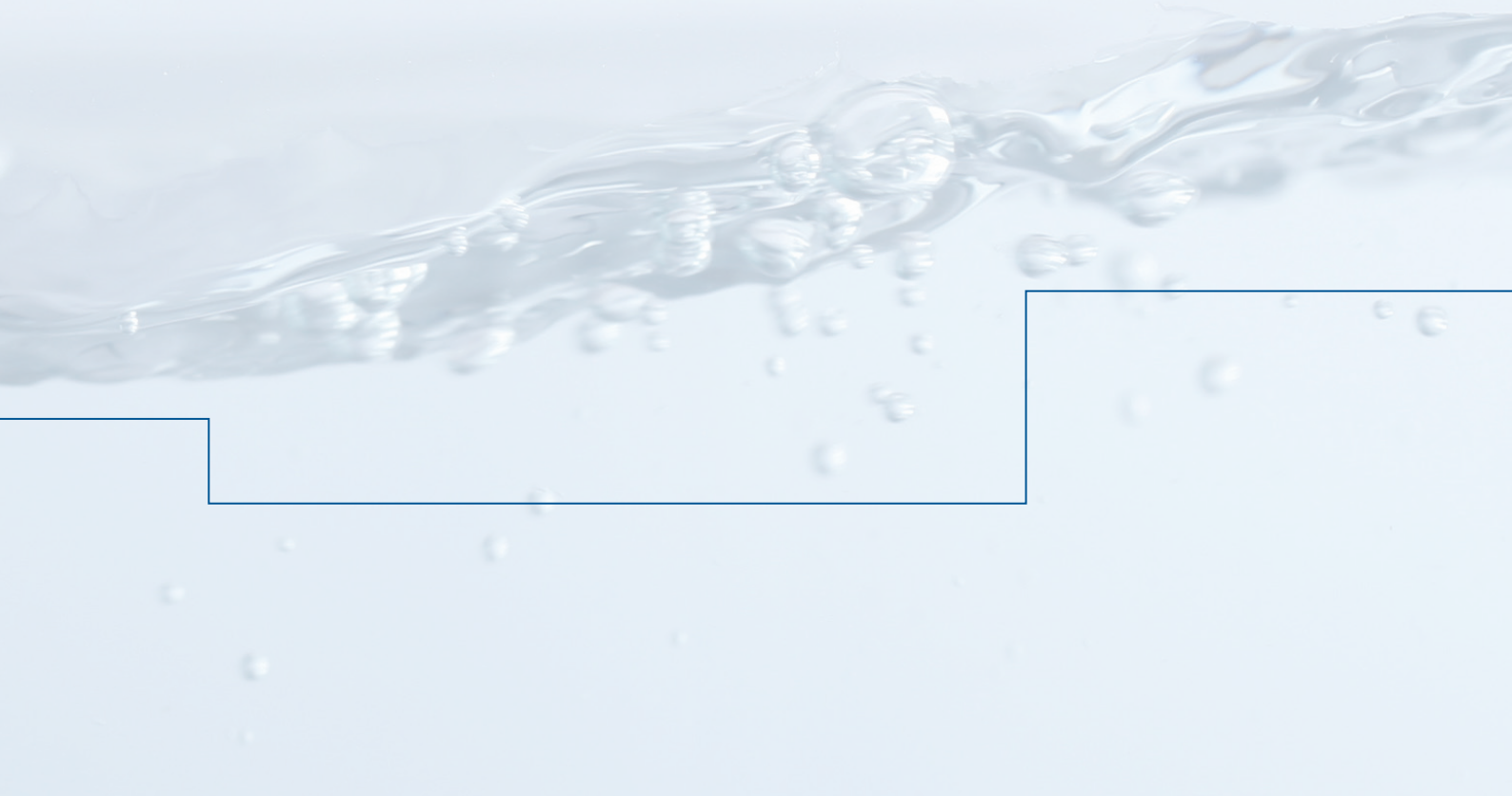

PRECISION
QUALITY
PASSION

Your needs are our commitment. Passion for the product, a high degree of flexibility, precision and continued progress make it possible for us to deliver the highest quality for you.

In close cooperation with you the customer, we strive to optimally meet your needs. Short decision-making processes enable us to deliver custom-made products on short notice.

OUR PERFORMANCE MEASURES UP –
the best quality wherever you need it.

35 YEARS EXPERIENCE IN METALLURGY
We fully support our products - even if they belong to you.

Our products are employed in various industries. What their users have in common is that they measure fluids, in large and in small amounts, at high or at low temperatures, or under high pressure. We offer solutions to meet the needs of our customers.

TABLE OF CONTENTS

1001	MAGNETIC FLOAT LEVEL TRANSMITTER Continuous recording of fluid levels	Page 6 - 57
1003	MAGNETIC FLOAT SWITCHES Recording and controlling of fluid levels	Page 58 - 113
1003-h	MAGNETIC FLOAT SWITCHES HORIZONTAL Lateral recording and controlling of fluid levels	Page 114 - 137
1004	ELECTRODES Conductive monitoring of fluid levels	Page 138 - 149
1007	FLOW CONTROLLER Recording and controlling of flow	Page 150 - 181
1008	MAGNETIC SWITCHES Magnetic position monitoring	Page 182 - 203
1009	SUSPENDED FLOAT SWITCHES Recording and controlling of fluid levels	Page 204 - 209
1011	CONTROL UNITS Control unit / Display / Contact protection relay / Repeater	Page 210 - 231
1015	BYPASS LEVEL INDICATOR Continuous display and monitoring of fluid levels	Page 232 - 297
1015-MINI	BYPASS LEVEL INDICATOR-MINI Continuous display and monitoring of fluid levels	Page 298 - 327
1016	TOP MOUNTED LEVEL INDICATOR Continuous display and monitoring of fluid levels	Page 328 - 381
1016-MINI	TOP MOUNTED LEVEL INDICATOR-MINI Continuous display and monitoring of fluid levels	Page 382 - 421

Continuous recording of fluid levels

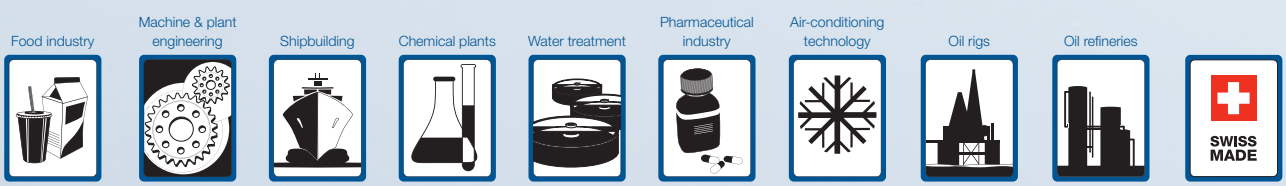

1001

MAGNETIC FLOAT LEVEL TRANSMITTER

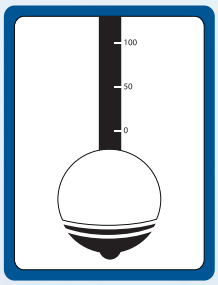

Table of content

Magnetic Float Level Transmitter / Content 8
Magnetic Float Level Transmitter / Functional description 9
Magnetic Float Level Transmitter / Type key 10
Magnetic Float Level Transmitter / Type key 11
Magnetic Float Level Transmitter / Type key 12
Magnetic Float Level Transmitter / Type key 13
Magnetic Float Level Transmitter / Stainless steel 14
Magnetic Float Level Transmitter / Stainless steel 15
Magnetic Float Level Transmitter / Stainless steel 16
Magnetic Float Level Transmitter / Stainless steel 17
Magnetic Float Level Transmitter / Stainless steel - flexible 18
Magnetic Float Level Transmitter / Stainless steel - angulate 19
Magnetic Float Level Transmitter / Stainless steel - Displacer 20
Magnetic Float Level Transmitter / Stainless steel - 3A Sanitary Standard 21
Magnetic Float Level Transmitter / Brass 22
Magnetic Float Level Transmitter / Brass 23
Magnetic Float Level Transmitter / Polyamide - flexible 24
Magnetic Float Level Transmitter / Polyamide - flexible 25
Magnetic Float Level Transmitter / Titanium 26
Magnetic Float Level Transmitter / Titanium 27
Magnetic Float Level Transmitter / Alloy C 28
Magnetic Float Level Transmitter / Alloy C 29
Magnetic Float Level Transmitter / PVC 30
Magnetic Float Level Transmitter / PVC 31
Magnetic Float Level Transmitter / Polypropylene 32
Magnetic Float Level Transmitter / Polypropylene 33
Magnetic Float Level Transmitter / Polypropylene 34
Magnetic Float Level Transmitter / Polypropylene - flexible 35
Magnetic Float Level Transmitter / PVDF 36
Magnetic Float Level Transmitter / PVDF 37
Magnetic Float Level Transmitter / ECTFE coated 38
Magnetic Float Level Transmitter / ECTFE coated 39
Magnetic Float Level Transmitter / PFA coated 40
Magnetic Float Level Transmitter / PFA coated 41
Magnetic Float Level Transmitter / ... - magnetostrictive 42
Magnetic Float Level Transmitter / Stainless steel - magnetostrictive 43
Magnetic Float Level Transmitter / PVC - magnetostrictive 44
Magnetic Float Level Transmitter / PP - magnetostrictive 45
Magnetic Float Level Transmitter / PVDF - magnetostrictive 46
Magnetic Float Level Transmitter / coated - magnetostrictive 47
Magnetic Float Level Transmitter / Ball float 48
Magnetic Float Level Transmitter / Ball float 49
Magnetic Float Level Transmitter / Cylindrical float 50
Magnetic Float Level Transmitter / Cylindrical float 51
Magnetic Float Level Transmitter / Electrical connection 52
Magnetic Float Level Transmitter / Electrical connection 53
Magnetic Float Level Transmitter / Electrical connection 54
Magnetic Float Level Transmitter / Control unit 55
Magnetic Float Level Transmitter / Temperature sensor 56
Magnetic Float Level Transmitter / Cable / Level switch 57

Heinrich Kübler AG
Ruessenstrasse 4 | CH-6340 Baar | Phone +41 (0)41 766 62 62 | Fax +41 (0)41 766 62 63 | E-Mail info@kubler.ch | Internet www.kubler.ch

Functional description

Functional description

The magnetic float level transmitter device serves as a readings recorder for the electrical, continuous remote indication of the filling level. The operation of the measuring devices is based on the float principle. Through the wall of a guide tube the magnetic field, which is contained in the spherical or cylindrical float, triggers reed contacts, which uninterruptedly pick up the measuring voltage given at a resistance measuring chain.
The measuring voltage is proportional to the height of the filling level (3-wire potentiometer circuit). The size of the reed contacts is made up in different accuracy's. In connection with a control unit the resistance value can be converted into a standardised analogue value, e.g. 4 …20 mA.

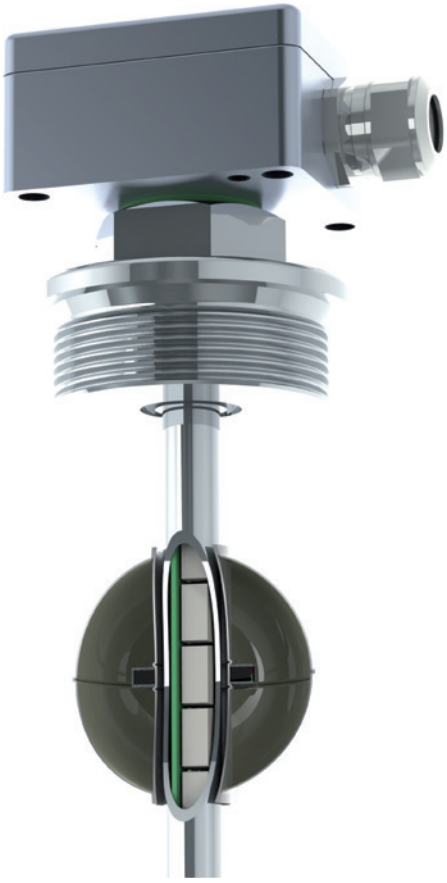

Application area

Magnetic float level transmitter are exclusively meant for the monitoring of the filling level of liquid media and may be installed into vessels and tanks which meet the technical requirements, i.e. which are designed for the according operating parameters.
All materials which will come in touch with the liquid medium have to be invariable, accordingly.

Design limits

Specific gravity:	≥ 400 kg/m³
Design pressure:	-1 bar ... 150 bar
Design temperature:	-50°C ... 250°C

Magnetic Float Level Transmitter / Type key

Code 1

	Key 1 … / … / … - **Electrical connection**		Key 2 … / … / … - **Process connection material quality**		Key 3 … / … / … - **Process connection**
ALE	Aluminium terminal box 64 x 58 x 34 mm (only without control unit)	V[1]	Stainless steel	E[1]	Thread to electrical direction, G/BSP
ALF	Aluminium terminal box 80 x 75 x 57 mm	VP[1]	Stainless steel electropolished / Ra ca. 0,8µm (not attestable)	R[1]	Thread to float direction, G/BSP
ALG	Aluminium terminal box 100 x 100 x 81 mm	TI[1]	Titanium	ENPT[1]	Thread to electrical direction, NPT
ALDA[1]	Aluminium terminal box Ø 95 x 84 mm	HC[1]	Alloy C	RNPT[1]	Thread to float direction, NPT
AVA	Stainless steel terminal box Ø 82 x 110 mm	ME	Brass	EM[1]	Thread to electrical direction, metric
AVDA[1]	Stainless steel terminal box Ø 82 x 110 mm	VEEC[1]	Stainless steel ECTFE coated	RM[1]	Thread to float direction, metric
AVM	Stainless steel terminal box Ø 50 x 117 mm	VPFA[1]	Stainless steel PFA coated	FE[1]	Flange according to EN
AVDM[1]	Stainless steel terminal box Ø 169 x 117 mm	P	PVC	FA[1]	Flange according to ANSI
DAAVDM[1]	Stainless steel terminal box with LED display Ø 169 x 117 mm	PP	Polypropylene	F[1]	Flange according to …
		PF	PVDF	FS[1]	Flange according to drawing
APA	Polyester terminal box 80 x 75 x 55 mm	PA	Polyamide	OP[1]	Standard oval flange 80 x 50 mm
APB	Polyester terminal box 80 x 75 x 55 mm / Exm			SO	Without process connection
ABA	ABS terminal box 80 x 82 x 55 mm			TC[1]	Try-Clamp according to ISO 2852
K	Connection cable			BK[1]	Aseptic blind cone according to DIN 11851
K68	Connection cable IP 68 (≥ G 3/8“)			BKN[1]	Aseptic blind cone according to DIN 11851 with groove nut
ASH	Connector Hirschmann DIN 43650			BK64[1]	Aseptic blind cone acc. to DIN 11864/1 form A
ASHAA	Plastic connector HTS straight			BKN64[1]	Aseptic blind cone acc. to DIN 11864/1 form A with groove nut
ASHAB	Plastic connector HTS angulate				
ASHBA	Aluminium connector HTS straight			BKD[1]	Try-Clamp according to DIN 32676
ASHBB	Aluminium connector HTS angulate			BKND[1]	Try-Clamp according to DIN 32676 with clamp
ASQ	Quick-On Connector			GM[1]	Female thread G (only bypass chamber)
ASMA	Connector M12 3-pins			NPTM[1]	Female thread NPT (only bypass chamber)
ASMB	Connector M12 8-pins			GN[1]	Male thread G (only bypass chamber)
ASC	Connector C091D 7-pins			NPTN[1]	Male thread NPT (only bypass chamber)
DAALA	Aluminium terminal box with LED display Ø 82 x 100 mm			SE[1]	Welding stub end (only bypass chamber)
DAAVDA[1]	Stainless steel terminal box with LED display Ø 82 x 100 mm			ERVE	Cutting ring union

Code 2

	Key 1 … - **Threaded connection**		Key 1 … - **Try-Clamp / Aseptic cone**
…	Threaded connection size	…	Nominal size

Code 2

	Key 1.1 (only for flange) … / … / … - **Flange connection**		Key 1.2 (only for flange) … / … / … - **Flange connection**		Key 1.3 (only for flange) … / … / … - **Flange connection**
…	Flange nominal bore	…	Flange pressure rating	…	Flange facing

Example

Code	1						2						3		4				5						6						
Key	1	/	2	/	3	-	1.1	/	1.2	/	1.3	-	1	-	1	/	2	-	1	/	2	/	3	-	1	/	2	/	3	/	4	-
Example	ALF	/	V	/	FE	-	80	/	16	/	B1	-	TP43B	-	V	/	K15	-	U	/	R	/	TO	-	1	/	TFA2	/	TPAT	/	050	-

Black = not possible according to Atex / Blue = possible according to Atex Exia / Blue[1] = possible according to Atex Exia and Exd / Black[1] = possible according to Atex Exd

Heinrich Kübler AG
Ruessenstrasse 4 | CH-6340 Baar | Phone +41 (0)41 766 62 62 | Fax +41 (0)41 766 62 63 | E-Mail info@kubler.ch | Internet www.kubler.ch

Code 3

	Key 1 … - **Control unit**		Key 1 … - **Control unit**
TP43A[1]	TP5343A	TMT181A[1]	TMT181
TP43B[1]	TP5343B Ex	TMT181B[1]	TMT181 Ex
TD35A[1]	TD5335A	ZMU[1]	XT42SI Ex
TD35B[1]	TD5335D Ex	TAMX[1]	other control unit
TP50AP[1]	TP5350AP / PROFIBUS® PA	MST[1]	Magnetostrictive / 4 ... 20 mA
TP50BP[1]	TP5350BP Ex / PROFIBUS® PA	MSTB[1]	Magnetostrictive / 4 ... 20 mA / Ex
TP50AF[1]	TP5350AF / FOUNDATION™ Fieldbus	MSTH[1]	Magnetostrictive / HART®-Protocol
TP50BF[1]	TP5350BF Ex / FOUNDATION™ Fieldbus	MSTHB[1]	Magnetostrictive / HART®-Protocol / Ex

Code 4

	Key 1 … / … - **Guide tube material quality**		Key 2 … / … - **Accuracy**
V[1]	Stainless steel	K5[1]	Accuracy 5 mm / -30 ... 130°C
VP[1]	Stainless steel electropolished / Ra ca. 0,8µm	K5HTF[1]	Accuracy 5 mm / -40 ... 200°C
	(not attestable)	K5HT[1]	Accuracy 5 mm / -40 ... 250°C
TI[1]	Titanium	K10[1]	Accuracy 10 mm / -30 ... 130°C
HC[1]	Alloy C	K10HTF[1]	Accuracy 10 mm / -40 ... 200°C
ME	Brass	K10HT[1]	Accuracy 10 mm / -40 ... 250°C
VEEC[1]	Stainless steel ECTFE coated	K12.7[1]	Accuracy 12.7 mm / -30 ... 130°C
VPFA[1]	Stainless steel PFA coated	K15[1]	Accuracy 15 mm / -30 ... 130°C
P	PVC	K15HTF[1]	Accuracy 15 mm / -40 ... 200°C
PP	Polypropylene	K15HT[1]	Accuracy 15 mm / -40 ... 250°C
PF	PVDF	K1[1]	Accuracy 0.2 mm / -40 ... 125°C
PA	Polyamide	K1HT[1]	Accuracy 0.2 mm / -40 ... 250°C

Code 5

	Key 1 … / … / … - **Level switch function**		Key 2 … / … / … - **Level switch option**		Key 3 … / … / … - **Temperature switch function**
U[1]	Change over (SPDT)*	R22[1]	Switch protective circuit with	TS[1]	Temperature switch normally open (NO)*
S[1]	Normally open (NO)*		22 ohm / 0.21 W resistor	TO[1]	Temperature switch normally closed (NC)*
O[1]	Normally closed (NC)*	N[1]	Switch protective circuit according to	TPS[1]	Temperature switch normally open (NO)*
			NAMUR EN 60947	TPO[1]	Temperature switch normally closed (NC)*
	* Multiple selections possible e.g. ' OSS '				* Multiple selections possible e.g. ' TSTO '

Code 6

	Key 1 … / … / … / … - **Number of probes**		Key 2 … / … / … / … - **Temperature probe**		Key 3 … / … / … / … - **Temperature control unit**
…	Number of temperature probes	TFA2[1]	Pt 100 Probe / 2-wire	TPAT[1]	TP5333A
		TFA3[1]	Pt 100 Probe / 3-wire	TPBT[1]	TP5333D Ex
		TFA4[1]	Pt 100 Probe / 4-wire	TDAT[1]	TD5335A
		TFB2[1]	Pt 1000 Probe / 2-wire	TDBT[1]	TD5335D Ex
		TFB3[1]	Pt 1000 Probe / 3-wire	PAATP [1]	TP5350AP / PROFIBUS® PA
		TFB4[1]	Pt 1000 Probe / 4-wire	PABTP [1]	TP5350BP Ex / PROFIBUS® PA
		TF[1]	Temperature probe (acc. to customers device)	PAATF[1]	TP5350AF / FOUNDATION™ Fieldbus
				PABTF[1]	TP5350BF Ex / FOUNDATION™ Fieldbus

Example

7						8					9			10				11			**Code**
1	/ 2	/ 3	/ 4	/ 5	-	1	/ 2	/ 3	/ 4	-	1	/ 2	/ 3	-	1	/ 2	/ 3	-	1	/ 2	/ 3	**Key**
L1000	/ 18				-	1	SV72	/ 24	/ V	-								-	EXIAG	/ PEDII		**Example**

Black = not possible according to Atex / Blue = possible according to Atex Exia / Blue[1] = possible according to Atex Exia and Exd / Black[1] = possible according to Atex Exd

Magnetic Float Level Transmitter / Type key

Code 6

	Key 4 … / … / … / … - **Temperature measuring range**
050[1]	0°C … 50°C / 4 ... 20 mA
100[1]	0°C … 100°C / 4 ... 20 mA
150	0°C … 150°C / 4 ... 20 mA
200	0°C … 200°C / 4 ... 20 mA
000	..°C … ..°C / 4 ... 20 mA

Code 7

	Key 1 … / … / … / … / … - **Length of instrument / Centre distance**		Key 2 … / … / … / … / … - **Guide tube diameter (material quality)**		Key 3 … / … / … / … / … - **Bypass chamber material quality**
L…[1]	Length of instrument in mm	11[1]	Ø 11 mm (VEEC / VPFA)	V[1]	Stainless steel
	(Key 3 - 5 not applicable)	12[1]	Ø 12 mm (V / VP / M / TI / HC / PA / P / PP / PF)	VP[1]	Stainless steel electropolished / Ra ca. 0,8µm
M…[1]	Centre distance in mm (Chamber)	14[1]	Ø 14 mm (V / VP / M / TI)		(not attestable)
		16[1]	Ø 16 mm (V / VP / P / PP / PF)	TI[1]	Titanium
		17[1]	Ø 17 mm (VEEC / VPFA)	HC[1]	Alloy C
		18[1]	Ø 18 mm (V / VP / TI / HC)	VEEC[1]	Stainless steel ECTFE coated
		20[1]	Ø 20 mm (P / PP / PF)	VPFA[1]	Stainless steel PFA coated
		40[1]	Ø 40 mm (V / VP)	P	PVC
				PP	Polypropylene
				PF	PVDF

Code 7

	Key 4 … / … / … / … / … - **Bypass chamber outside diameter**		Key 5 … / … / … / … / … - **Bypass chamber wall thickness**
60[1]	Ø 60.30 mm (V / VP / TI)	…	Bypass chamber wall thickness in mm
61[1]	Ø 60.33 mm (V / VP / HC)		
63	Ø 63.00 mm (P / PP / PF)		
63[1]	Ø 63.50 mm (V / VP / VEEC / VPFA)		
73[1]	Ø 73.03 mm (V / VP)		
88[1]	Ø 88.90 mm (V / VP)		
114[1]	Ø 114.30 mm (V / VP)		

Code 8

	Key 1 … / … / … / … - **Number of floats**		Key 1 … / … / … / … - **Float**		Key 3 … / … / … / … - **Inner bore of float**
…	Number of floats	…	Acc. to float table on page 48 - 51	…	Acc. to float table on page 48 - 51

Code 8

	Key 4 … / … / … / … - **Magnetic system**
…	Acc. to float table on page 48 - 51

Example

Code	1					2					3		4			5					6					
Key	1	/	2	/	3	-	1.1	/	1.2	/	1.3	-	1	-	1	/	2	-	1	/	2	/	3	-	1	/	2	/	3	/	4	-
Example	ALF	/	V	/	FE	-	80	/	16	/	B1	-	TP43B	-	V	/	K15	-	U	/	R	/	TO	-	1	/	TFA2	/	TPAT	/	050	-

Black = not possible according to Atex / Blue = possible according to Atex Exia / Blue[1] = possible according to Atex Exia and Exd / Black[1] = possible according to Atex Exd

Heinrich Kübler AG
Ruessenstrasse 4 | CH-6340 Baar | Phone +41 (0)41 766 62 62 | Fax +41 (0)41 766 62 63 | E-Mail info@kubler.ch | Internet www.kubler.ch

Code 9

	Key 1 ... / ... / ... - **Additional design**		Key 2 ... / ... / ... - **Instruction for installation**		Key 3 ... / ... / ... - **Adjusting mechanism**
FG[1]	Guide tube in flexible design	GU[1]	Installation from bottom site	VE	Adjustable version with cutting ring union (only one time positioning possible on ATEX 94/9/EC applications)
WG[1]	Angled design	HH[1]	Process connection of displacer side-side		
		HV[1]	Process connection of displacer top side - bottom Vertical		

Code 10

	Key 1 ... / ... / ... - **Length of cable**		Key 2 ... / ... / ... - **Connection cable**		Key 3 ... / ... / ... - **Connection cable option**
...	Length of cable in meter	PVC[1]	PVC connection cable	KA[1]	Shielded
		PVCB[1]	PVC connection cable with blue coating	KB[1]	Shielded / oil-resistant
		SIL[1]	Silicone connection cable	KC[1]	Shielded / oil-resistant / halogen-free
		PUR[1]	PUR connection cable	KD[1]	Oil-resistant
		RAD[1]	Radox connection cable	KE[1]	Oil-resistant / halogen-free
		FTEF[1]	Teflon strands	KF[1]	Halogen-free
		FPVC[1]	PVC strands		

Code 11

	Key 1 ... / ... / ... - **Approvals / 1**		Key 2 ... / ... / ... - **Approvals / 2**		Key 3 ... / ... / ... - **Approvals / 3**
EXIAG	Acc. to Exia, atmosphere gas	PEDII[1]	Acc. to PED97/23/EC category II	3A[1]	Approval 3A Sanitary Standard
EXIAGD	Acc. to Exia, atmosphere gas and dust	PEDIV[1]	Acc. to PED97/23/EC category IV	ABS[1]	Approval American Bureau of Shipping
EXDG[1]	Acc. to Exd, atmosphere gas	PEDIVW[1]	Acc. to PED 97/23/EC, category IV and approval federal water act §19	BV[1]	Approval Bureau Veritas
EXDGD[1]	Acc. to Exd, atmosphere gas and dust			GL[1]	Approval Germanischer Lloyd
EXIADG[1]	Acc. to Exia and Exd, atmosphere gas	W[1]	Approval federal water act §19	LR[1]	Approval Lloyd's Register
EXIADGD[1]	Acc. to Exia and Exd, atmosphere gas and dust			EAC1[1]	Approval EAC TR CU 004/2011 & 012/2011 & 020/2011

Example

7	8	9	10	11	Code
1 / 2 / 3 / 4 / 5 -	1 / 2 / 3 / 4 -	1 / 2 / 3 -	1 / 2 / 3 -	1 / 2 / 3	Key
L1000 / 18 -	1 SV72 / 24 / V -		-	EXIAG / PEDII	Example

Black = not possible according to Atex / Blue = possible according to Atex Exia / Blue[1] = possible according to Atex Exia and Exd / Black[1] = possible according to Atex Exd

Electrical connection

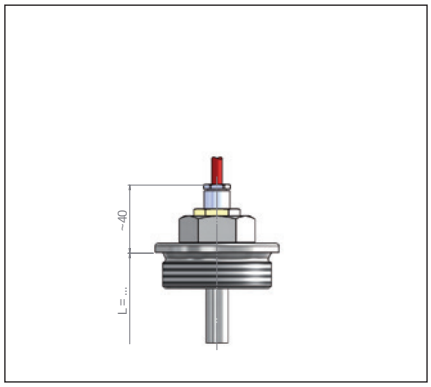

Connection type: K
Material quality: According as cable type
Cable entry: PG or metric
Ingress protection class: IP 55 (optional IP 68)
Ambient temperature: -40°C ... 200°C

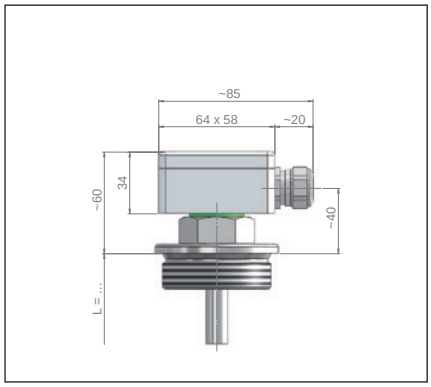

Connection type: ALE
Material quality: Aluminium coated RAL 7001
Cable entry: M20 x 1.5
Ingress protection class: IP 65
Ambient temperature: -40°C ... 100°C

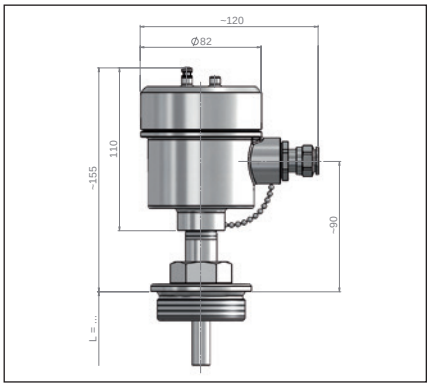

Connection type: AVA / AVDA (Exd)
Material quality: Stainless steel A4 (SS316)
Cable entry: M20 x 1.5
Ingress protection class: IP 67 / (Exd / IP 68)
Ambient temperature: -40°C ... 85°C

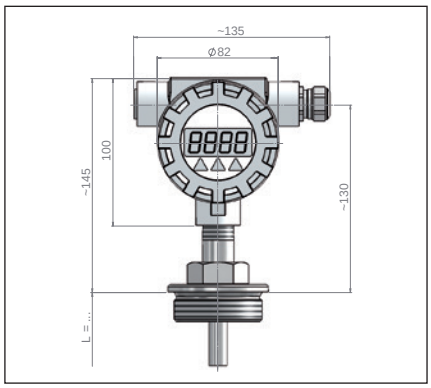

Connection type: DAALA
Material quality: Aluminium
Cable entry: M20 x 1.5
Ingress protection class: IP 65
Ambient temperature: -40°C ... 60°C

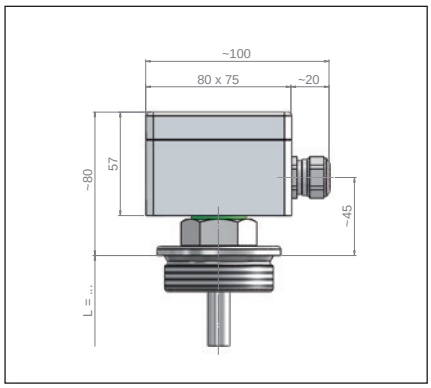

Connection type: ALF
Material quality: Aluminium coated RAL 7001
Cable entry: M20 x 1.5
Ingress protection class: IP 65
Ambient temperature: -40°C ... 100°C

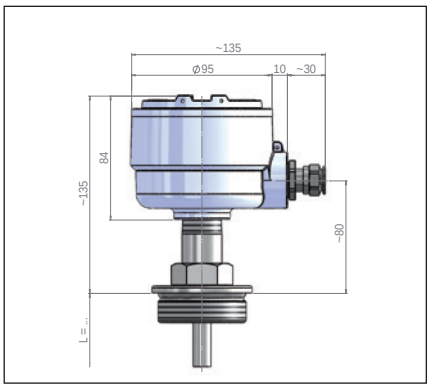

Connection type: ALDA (Exd)
Material quality: Aluminium coated RAL 9006
Cable entry: M20 x 1.5
Ingress protection class: IP 68
Ambient temperature: -40°C ... 100°C

Approvals / Certificates

ATEX*

II 1/2G Ex c ia IIC T6 - T3 Ga/Gb	II 2G Ex c d IIC T6 - T4 Gb		II 2G Ex c d IIC T6 - T4 Gb	
II 1/2G Ex c d ia IIC T6 - T4 Ga/Gb	II 2D Ex c tb IIIC T80°C - T190°C or T125°C Db IP6X		II 2D Ex c tb IIIC T80°C - T95°C or T125°C Db IP6X	
Liquid temperature Exia max. 180°C / Exd max. 120°C				
Type of protection intrinsic safety Ex ia IIC passive multi-pole device	U_i ≤ 30 V	I_i ≤ 150 mA		
Type of protection intrinsic safety Ex ia IIC with built-in separately certified measuring transducer		see appropriate special certificate		
Type of protection intrinsic safety Ex ia IIC switch or temperature switch	I_i ≤ 100 mA			
Type of protection „flameproof enclosure“	U_N ≤ 28 V	I_i ≤ 100 mA	P_i ≤ 700 mW	
Type of protection „flameproof enclosure“ passive multi-pole device	U_N ≤ 30 VDC/AC	I_N ≤ 150 mA		
Type of protection „flameproof enclosure“ temperature sensor / switch	U_N ≤ 100 VDC/AC	I_N ≤ 300 mA	P_{SN} ≤ 1 W	P_{FN} ≤ 700 mW

Further electrical connections page 52 - 54
Further process connection according to type key page 10
Further floats page 48 - 51

The magnetic float level transmitter are based on a modular design and can be arranged individually.
Type key page 10 - 13

* = The approval is dependent on the equipment combination

Heinrich Kübler AG
Ruessenstrasse 4 | CH-6340 Baar | Phone +41 (0)41 766 62 62 | Fax +41 (0)41 766 62 63 | E-Mail info@kubler.ch | Internet www.kubler.ch

Type	K/V/E-3/8-V/K..-L../12-1/SVK44/15/V-../PVC	K/V/E-3/8-V/K..-L../12-1/SV52/15/V-../SIL
Material quality:	1.4404 / 1.4435 / 1.4571 (316L / 316Ti)	1.4404 / 1.4435 / 1.4571 (316L / 316Ti)
Electrical connection:	PVC connection cable	Silicone connection cable
Process connection:	G 3/8“	G 3/8“
Guide tube:	Ø 12 mm (Accuracy type K5.. Ø 14 mm)	Ø 12 mm (Accuracy type K5.. Ø 14 mm)
Length of instrument:	≤ 5000 mm*	≤ 5000 mm*
Float:	SVK44/15/V Ø 44 mm	SV52/15/V Ø 52 mm
Specific gravity:	≥ 800 kg/m³	≥ 700 kg/m³
Design pressure:	-1 bar ... 25 bar	-1 bar ... 40 bar
Design temperature:	-20°C ... 80°C	-40°C ... 180°C
Ingress protection class:	IP 55 (optional IP 68)	IP 55 (optional IP 68)
Mounting position:	Vertical +/-30°	Vertical +/-30°
Accuracy		
Type K.. (-30°C ... 130°C) Accuracy:	5 / 10 / 12.7 mm	5 / 10 / 12.7 mm
Type K..HTF (-40°C ... 200°C) Accuracy:	-	5 / 10 / 15 mm
Type K..HT (-40°C ... 250°C) Accuracy:	-	5 / 10 / 15 mm
Option control unit / Page 55		
Control unit:	- Programmable - Hart-programmable - Profibus PA - Foundation Fieldbus	- Programmable - Hart-programmable - Profibus PA - Foundation Fieldbus
Option temperature probe / Page 56		
Temperature probe:	Pt-100 / Pt-1000	Pt-100 / Pt-1000
Norm:	IEC 751 Kl.B	IEC 751 Kl.B
Option temperature switch / Page 56		
Function:	Normally closed (NC) or normally open (NO)	Normally closed (NC) or normally open (NO)
Switching capacity:	Page 56	Page 56
Accuracy / Hysterese:	Page 56	Page 56
Temperature / Grading:	Page 56	Page 56

Minimum measures

K/V/E-3/8-V/K..-L../12-1/SVK44/15/V-../PVC
L1: ≥ 50 mm
U: 45 mm

Approvals / Certificates

ABS / ATEX / BV / EAC / GL / LR / PED / WHG

Minimum measures

K/V/E-3/8-V/K..-L../12-1/SV52/15/V-../SIL
L1: ≥ 55 mm
U: 45 mm

Approvals / Certificates

ABS / ATEX / BV / EAC / GL / LR / PED / WHG

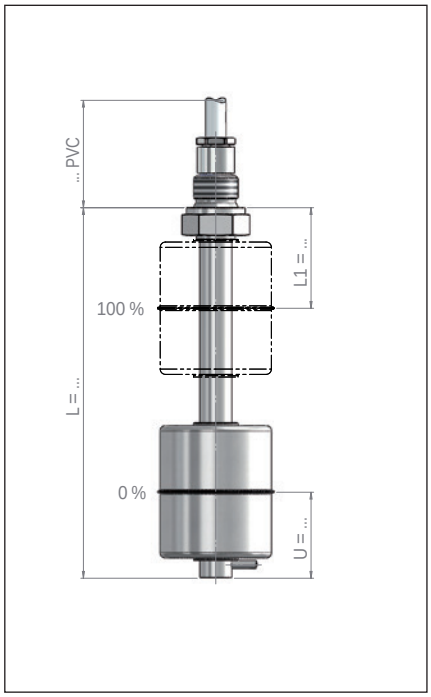

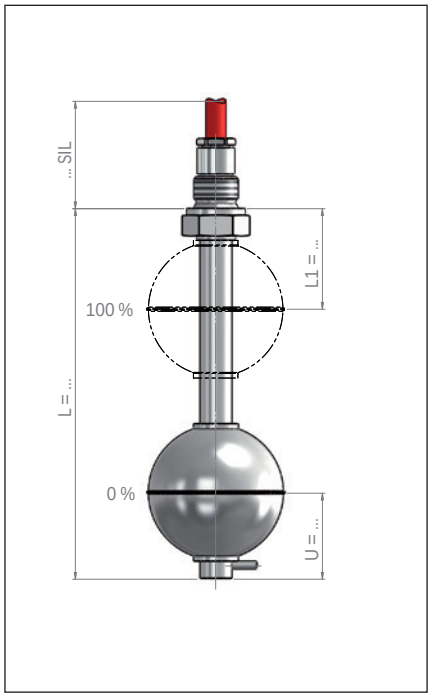

The magnetic float level transmitter are based on a modular design and can be arranged individually.
Type key page 10 - 13

* ATEX-design = guide tube length ≥ 4000 mm by calculation

Magnetic Float Level Transmitter / Stainless steel

Type	ALE/V/R-1½-V/K..-L../12-1/SVK44/15/V	ALE/V/R-2-V/K..-L../12-1/SV52/15/V
Material quality:	1.4404 / 1.4435 / 1.4571 (316L / 316Ti)	1.4404 / 1.4435 / 1.4571 (316L / 316Ti)
Electrical connection:	ALE Aluminium terminal box	ALE Aluminium terminal box
Process connection:	G 1½“	G 2“
Guide tube:	Ø 12 mm (Accuracy type K5.. Ø 14 mm)	Ø 12 mm (Accuracy type K5.. Ø 14 mm)
Length of instrument:	≤ 5000 mm*	≤ 5000 mm*
Float:	SVK44/15/V Ø 44 mm	SV52/15/V Ø 52 mm
Specific gravity:	≥ 800 kg/m³	≥ 700 kg/m³
Design pressure:	-1 bar ... 25 bar (depending on temperature)	-1 bar ... 40 bar (depending on temperature)
Design temperature:	See accuracy	See accuracy
Ingress protection class:	IP 65	IP 65
Mounting position:	Vertical +/-30°	Vertical +/-30°
Accuracy		
Type K.. (-30°C ... 130°C) Accuracy:	5 / 10 / 12.7 / 15 mm	5 / 10 / 12.7 / 15 mm
Type K..HTF (-40°C ... 200°C) Accuracy:	5 / 10 / 15 mm	5 / 10 / 15 mm
Type K..HT (-40°C ... 250°C) Accuracy:	5 / 10 / 15 mm	5 / 10 / 15 mm
Option control unit / Page 55		
Control unit:	- Programmable - Hart-programmable - Profibus PA - Foundation Fieldbus	- Programmable - Hart-programmable - Profibus PA - Foundation Fieldbus
Option temperature probe / Page 56		
Temperature probe:	Pt-100 / Pt-1000	Pt-100 / Pt-1000
Norm:	IEC 751 Kl.B	IEC 751 Kl.B
Option temperature switch / Page 56		
Function:	Normally closed (NC) or normally open (NO)	Normally closed (NC) or normally open (NO)
Switching capacity:	Page 56	Page 56
Accuracy / Hysterese:	Page 56	Page 56
Temperature / Grading:	Page 56	Page 56

Minimum measures

ALE/V/R-1½-V/K..-L../12-1/SVK44/15/V
L1: ≥ 50 mm
U: 45 mm

Approvals / Certificates

ABS / ATEX / BV / EAC / GL / LR / PED / WHG

Minimum measures

ALE/V/R-2-V/K..-L../12-1/SV52/15/V
L1: ≥ 55 mm
U: 45 mm

Approvals / Certificates

ABS / ATEX / BV / EAC / GL / LR / PED / WHG

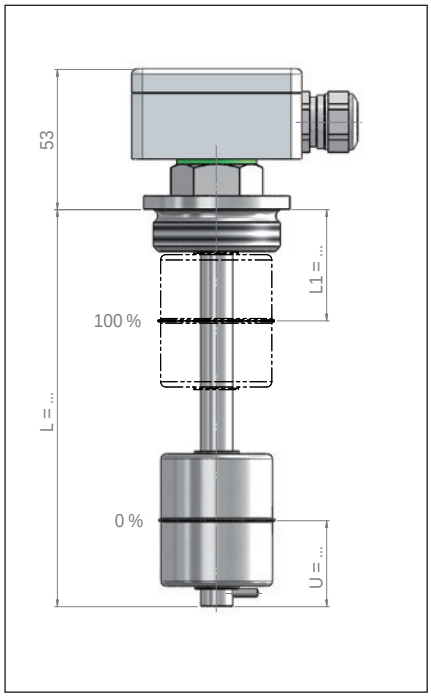

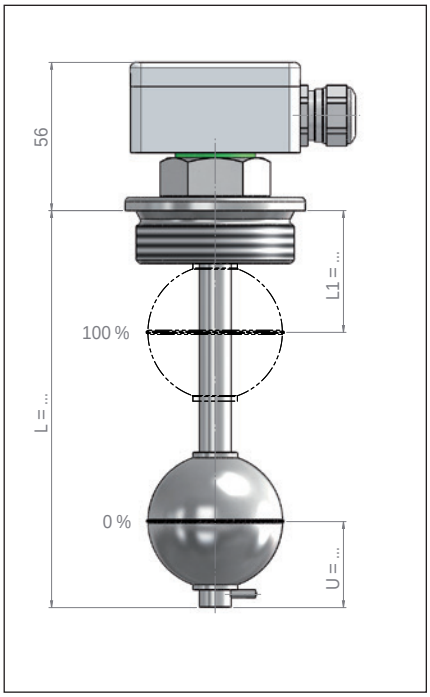

The Magnetic Float Level Transmitter are based on a modular design and can be arranged individually.
Type key page 10 - 13

* ATEX-design = guide tube length ≥ 4000 mm by calculation

Heinrich Kübler AG
Ruessenstrasse 4 | CH-6340 Baar | Phone +41 (0)41 766 62 62 | Fax +41 (0)41 766 62 63 | E-Mail info@kubler.ch | Internet www.kubler.ch

Type	ALE/V/FE-80/16/B1-V/K..-L../18-1/SV72/24/V	ALE/V/FE-80/16/B1-V/K..-L../40-1/SV300/56/R
Material quality:	1.4404 / 1.4435 / 1.4571 (316L / 316Ti)	1.4404 / 1.4435 / 1.4571 (316L / 316Ti)
Electrical connection:	ALE Aluminium terminal box	ALE Aluminium terminal box
Process connection:	Flange EN DN 80 / PN 16 / Form B1	Flange EN DN 80 / PN 16 / Form B1
Guide tube:	Ø 18 mm	Ø 40 mm
Length of instrument:	≤ 6000 mm*	≤ 10000 mm*
Float:	SV72/24/V Ø 72 mm	SV300/56/R Ø 300 mm
Specific gravity:	≥ 620 kg/m³	≥ 500 kg/m³
Design pressure:	-1 bar ... 16 bar (depending on temperature)	-1 bar ... 3 bar
Design temperature:	See accuracy	-40°C ... +200°C
Ingress protection class:	IP 65	IP 65
Mounting position:	Vertical +/-30°	Vertical +/-30°
Accuracy		
Type K.. (-30°C ... 130°C) Accuracy:	5 / 10 / 12.7 / 15 mm	5 / 10 / 12.7 / 15 mm
Type K..HTF (-40°C ... 200°C) Accuracy:	5 / 10 / 15 mm	5 / 10 / 15 mm
Type K..HT (-40°C ... 250°C) Accuracy:	5 / 10 / 15 mm	5 / 10 / 15 mm
Option control unit / Page 55		
Control unit:	- Programmable - Hart-programmable - Profibus PA - Foundation Fieldbus	- Programmable - Hart-programmable - Profibus PA - Foundation Fieldbus
Option temperature probe / Page 56		
Temperature probe:	Pt-100 / Pt-1000	Pt-100 / Pt-1000
Norm:	IEC 751 Kl.B	IEC 751 Kl.B
Option temperature switch / Page 56		
Function:	Normally closed (NC) or normally open (NO)	Normally closed (NC) or normally open (NO)
Switching capacity:	Page 56	Page 56
Accuracy / Hysterese:	Page 56	Page 56
Temperature / Grading:	Page 56	Page 56

Minimum measures

ALE/V/FE-80/16/B1-V/K..-L../18-1/SV72/24/V
L1: ≥ 60 mm
U: 60 mm

Approvals / Certificates

ABS / ATEX / BV / EAC / GL / LR / PED / WHG

Minimum measures

ALE/V/FE-80/16/B1-V/K..-L../40-1/SV300/56/R
L1: ≥ 70 mm
U: 90 mm

Approvals / Certificates

ABS / ATEX / BV / EAC / GL / LR / PED / WHG

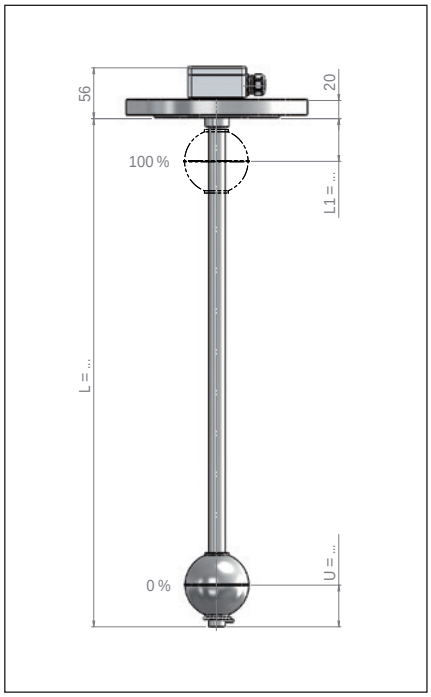

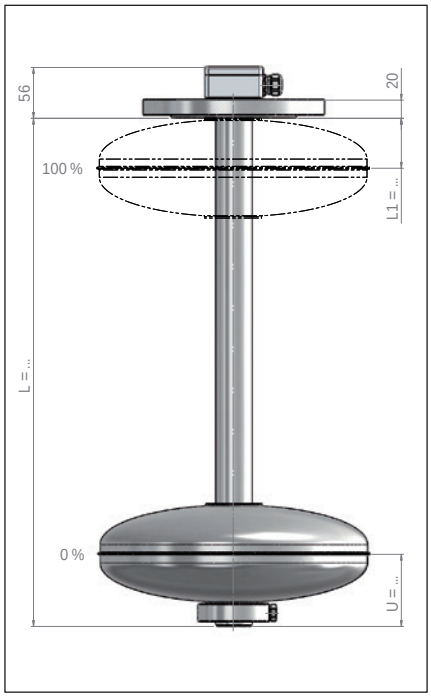

The Magnetic Float Level Transmitter are based on a modular design and can be arranged individually.
Type key page 10 - 13

* ATEX-design = guide tube length ≥ 4000 mm by calculation

Magnetic Float Level Transmitter / Stainless steel - flexible

Type	ALE/V/FE-80/16/B1-V/K12.7-L../16-1/SV72/24/V-FG	ALE/V/R-1-V/K12.7-L../16-1/SV72/24/V-FG
Material quality:	1.4404 / 1.4435 / 1.4571 (316L / 316Ti)	1.4404 / 1.4435 / 1.4571 (316L / 316Ti)
Electrical connection:	ALE Aluminium terminal box	ALE Aluminium terminal box
Process connection:	Flange EN DN 80 / PN 16 / Form B1	G 1“
Guide tube:	Ø 16 mm	Ø 16 mm
Length of instrument:	≤ 10000 mm*	≤ 10000 mm*
Float:	SV72/24/V Ø 72 mm	SV72/24/V Ø 72 mm
Specific gravity:	≥ 620 kg/m³	≥ 620 kg/m³
Design pressure:	-1 bar ... 16 bar (depending on temperature)	-1 bar ... 25 bar
Design temperature:	See accuracy	See accuracy
Ingress protection class:	IP 65	IP 65
Mounting position:	Vertical +/-30°	Vertical +/-30°
Accuracy		
Type K.. (-30°C ... 130°C) Accuracy:	12.7 mm	12.7 mm
Type K..HTF (-40°C ... 200°C) Accuracy:	-	-
Type K..HT (-40°C ... 250°C) Accuracy:	-	-
Option control unit / Page 55		
Control unit:	- Programmable - Hart-programmable - Profibus PA - Foundation Fieldbus	- Programmable - Hart-programmable - Profibus PA - Foundation Fieldbus
Option temperature probe / Page 56		
Temperature probe:	Pt-100 / Pt-1000	Pt-100 / Pt-1000
Norm:	IEC 751 Kl.B	IEC 751 Kl.B
Option temperature switch / Page 56		
Function:	Normally closed (NC) or normally open (NO)	Normally closed (NC) or normally open (NO)
Switching capacity:	Page 56	Page 56
Accuracy / Hysterese:	Page 56	Page 56
Temperature / Grading:	Page 56	Page 56

Minimum measures

ALE/V/FE-80/16/B1-V/K12.7-L../16-1/SV72/24/V-FG
L1: ≥ 60 mm
U: 60 mm

Approvals / Certificates

ATEX / BV / EAC / GL / PED

Minimum measures

ALE/V/R-1-V/K12.7-L../16-1/SV72/24/V-FG
L1: ≥ 60 mm
U: 60 mm

Approvals / Certificates

ATEX / BV / EAC / GL / PED

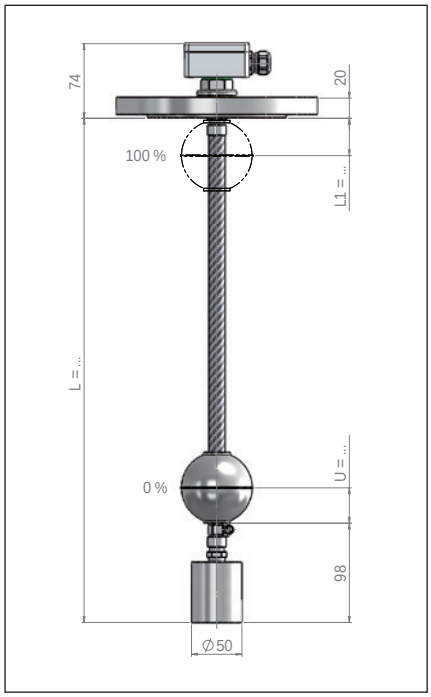

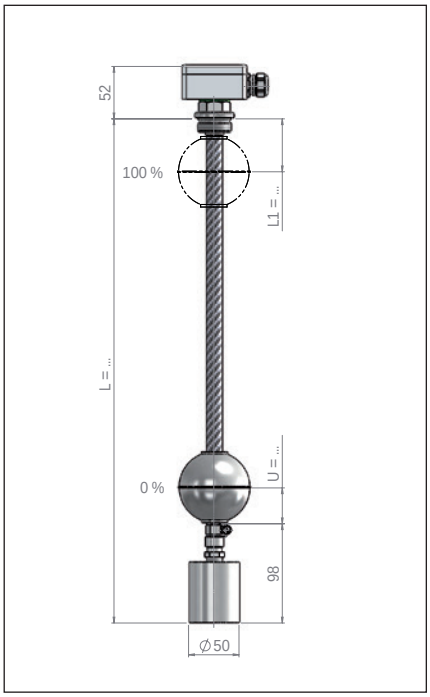

The Magnetic Float Level Transmitter are based on a modular design and can be arranged individually.
Type key page 10 - 13

* ATEX-design = guide tube length ≥ 4000 mm by calculation

Heinrich Kübler AG
Ruessenstrasse 4 | CH-6340 Baar | Phone +41 (0)41 766 62 62 | Fax +41 (0)41 766 62 63 | E-Mail info@kubler.ch | Internet www.kubler.ch

Type	K/V/E-3/8-V/K..-L../12-1/SV52/15/V-WG-../SIL	ALE/V/FE-80/16/B1-V/K..-L../18-1/SV72/24/V-WG
Material quality:	1.4404 / 1.4435 / 1.4571 (316L / 316Ti)	1.4404 / 1.4435 / 1.4571 (316L / 316Ti)
Electrical connection:	Silicone connection cable	ALE Aluminium terminal box
Process connection:	G 3/8“	Flange EN DN 80 / PN 16 / Form B1
Guide tube:	Ø 12 mm (Accuracy type K5.. Ø 14 mm)	Ø 18 mm
Length of instrument:	≤ 3000 mm	≤ 6000 mm*
Float:	SV52/15/V Ø 52 mm	SV72/24/V Ø 72 mm
Specific gravity:	≥ 700 kg/m³	≥ 620 kg/m³
Design pressure:	-1 bar ... 40 bar	-1 bar ... 16 bar (depending on temperature)
Design temperature:	-40°C ... 180°C	See accuracy
Ingress protection class:	IP 55 (optional IP 68)	IP 65
Mounting position:	Vertical +/-30°	Vertical +/-30°
Accuracy		
Type K.. (-30°C ... 130°C) Accuracy:	5 / 10 / 12.7 / 15 mm	5 / 10 / 12.7 / 15 mm
Type K..HTF (-40°C ... 200°C) Accuracy:	5 / 10 / 15 mm	5 / 10 / 15 mm
Type K..HT (-40°C ... 250°C) Accuracy:	5 / 10 / 15 mm	5 / 10 / 15 mm
Option control unit / Page 55		
Control unit:	- Programmable - Hart-programmable - Profibus PA - Foundation Fieldbus	- Programmable - Hart-programmable - Profibus PA - Foundation Fieldbus
Option temperature probe / Page 56		
Temperature probe:	Pt-100 / Pt-1000	Pt-100 / Pt-1000
Norm:	IEC 751 Kl.B	IEC 751 Kl.B
Option temperature switch / Page 56		
Function:	Normally closed (NC) or normally open (NO)	Normally closed (NC) or normally open (NO)
Switching capacity:	Page 56	Page 56
Accuracy / Hysterese:	Page 56	Page 56
Temperature / Grading:	Page 56	Page 56

Minimum measures

K/V/E-3/8-V/K..-L../12-1/SV52/15/V-WG-../SIL
L1: ≥ 75 mm
U: 45 mm
C: ≥ 70 mm

Approvals / Certificates

ABS / ATEX / BV / EAC / GL / LR / PED / WHG

Minimum measures

ALE/V/FE-80/16/B1-V/K..-L../18-1/SV72/24/V-WG
L1: ≥ 75 mm
U: 60 mm
C: ≥ 70 mm

Approvals / Certificates

ABS / ATEX / BV / EAC / GL / LR / PED / WHG

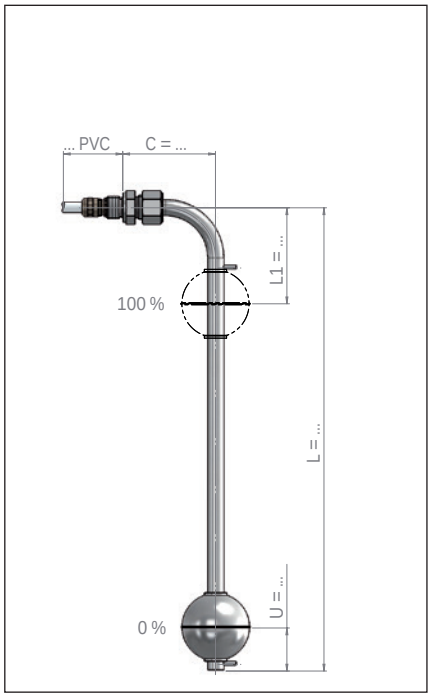

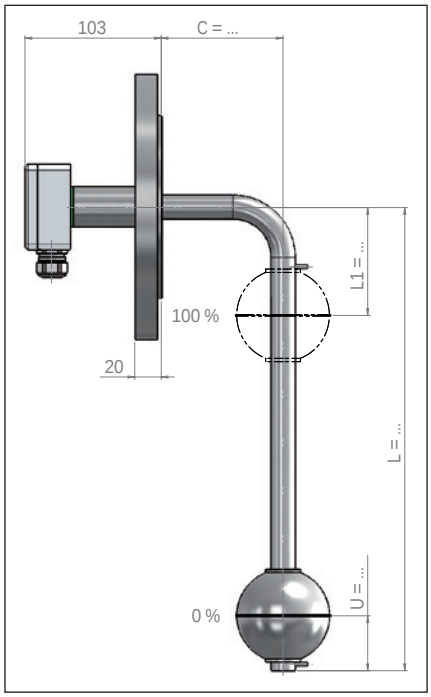

The Magnetic Float Level Transmitter are based on a modular design and can be arranged individually.
Type key page 10 - 13

* ATEX-design = guide tube length ≥ 4000 mm by calculation

Magnetic Float Level Transmitter / Stainless steel - Displacer

Type	ALE/V/FE-25/16/B1-V/K..-M../12/V/60/2-1/SVK44/15/V-HH	ALE/V/FE-25/16/B1-V/K..-M../12/V/60/2-1/SVK44/15/V-HV
Material quality:	1.4404 / 1.4435 / 1.4571 (316L / 316Ti)	1.4404 / 1.4435 / 1.4571 (316L / 316Ti)
Electrical connection:	ALE Aluminium terminal box	ALE Aluminium terminal box
Process connection:	Flange EN DN 25 / PN 16 / Form B1	Flange EN DN 25 / PN 16 / Form B1
Bypass chamber:	Ø 60,30 mm	Ø 60,30 mm
Centre distance:	≤ 1000 mm	≤ 1000 mm
Float:	SVK44/15/V Ø 44 mm	SVK44/15/V Ø 44 mm
Specific gravity:	≥ 800 kg/m³	≥ 800 kg/m³
Design pressure:	-1 bar ... 16 bar (depending on temperature)	-1 bar ... 16 bar (depending on temperature)
Design temperature:	See accuracy	See accuracy
Ingress protection class:	IP 65	IP 65
Mounting position:	Vertical +/-30°	Vertical +/-30°
Accuracy		
Type K.. (-30°C ... 130°C) Accuracy:	5 / 10 / 12.7 / 15 mm	5 / 10 / 12.7 / 15 mm
Type K..HTF (-40°C ... 200°C) Accuracy:	5 / 10 / 15 mm	5 / 10 / 15 mm
Type K..HT (-40°C ... 250°C) Accuracy:	5 / 10 / 15 mm	5 / 10 / 15 mm
Option control unit / Page 55		
Control unit:	- Programmable - Hart-programmable - Profibus PA - Foundation Fieldbus	- Programmable - Hart-programmable - Profibus PA - Foundation Fieldbus
Option temperature probe / Page 56		
Temperature probe:	Pt-100 / Pt-1000	Pt-100 / Pt-1000
Norm:	IEC 751 Kl.B	IEC 751 Kl.B
Option temperature switch / Page 56		
Function:	Normally closed (NC) or normally open (NO)	Normally closed (NC) or normally open (NO)
Switching capacity:	Page 56	Page 56
Accuracy / Hysterese:	Page 56	Page 56
Temperature / Grading:	Page 56	Page 56

Minimum measures

ALE/V/FE-25/16/B1-V/K..-M../12/V/60/2-1/SVK44/15/V-HH
L1: ≥ 130 mm
U: 45 mm

Approvals / Certificates

ABS / ATEX / BV / EAC / GL / LR / PED

Minimum measures

ALE/V/FE-25/16/B1-V/K..-M../12/V/60/2-1/SVK44/15/V-HV
L1: ≥ 130 mm
U: 45 mm

Approvals / Certificates

ABS / ATEX / BV / EAC / GL / LR / PED

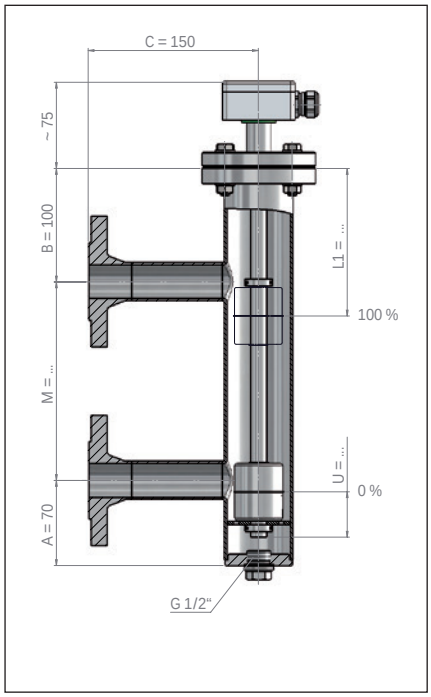

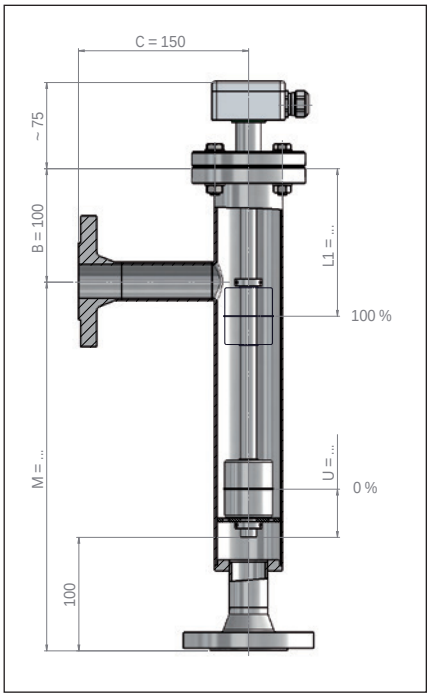

The Magnetic Float Level Transmitter are based on a modular design and can be arranged individually.
Type key page 10 - 13

Heinrich Kübler AG
Ruessenstrasse 4 | CH-6340 Baar | Phone +41 (0)41 766 62 62 | Fax +41 (0)41 766 62 63 | E-Mail info@kubler.ch | Internet www.kubler.ch

Type	K68/V/E-3/8-V/K..-L../16-1/SV3A80/23/V-../SIL-3A	AVA/V/BKN-..-V/K..-L../16-1/SV3A80/23/V-3A
Material quality:	1.4404 / 1.4435 / 1.4571 (316L / 316Ti)**	1.4404 / 1.4435 / 1.4571 (316L / 316Ti)**
Electrical connection:	Silicone connection cable	Stainless steel terminal box
Process connection:	G 3/8“	Aseptic blind cone acc. to DIN 11851 w. groove nut
Guide tube:	Ø 16 mm	Ø 16 mm
Length of instrument:	≤ 5000 mm*	≤ 5000 mm*
Float:	SV3A80/23/V Ø 80 mm	SV3A80/23/V Ø 80 mm
Specific gravity:	≥ 750 kg/m³	≥ 750 kg/m³
Design pressure:	-1 bar ... 40 bar	-1 bar ... 6 bar (depending on temperature)
Design temperature:	-40°C ... 180°C	See accuracy
Ingress protection class:	IP 68	IP 67
Mounting position:	Vertical +/-30°	Vertical +/-30°
Accuracy		
Type K.. (-30°C ... 130°C) Accuracy:	5 / 10 / 12.7 / 15 mm	5 / 10 / 12.7 / 15 mm
Type K..HTF (-40°C ... 200°C) Accuracy:	5 / 10 / 15 mm	5 / 10 / 15 mm
Type K..HT (-40°C ... 250°C) Accuracy:	5 / 10 / 15 mm	5 / 10 / 15 mm
Option control unit / Page 55		
Control unit:	- Programmable - Hart-programmable - Profibus PA - Foundation Fieldbus	- Programmable - Hart-programmable - Profibus PA - Foundation Fieldbus
Option temperature probe / Page 56		
Temperature probe:	Pt-100 / Pt-1000	Pt-100 / Pt-1000
Norm:	IEC 751 Kl.B	IEC 751 Kl.B
Option temperature switch / Page 56		
Function:	Normally closed (NC) or normally open (NO)	Normally closed (NC) or normally open (NO)
Switching capacity:	Page 56	Page 56
Accuracy / Hysterese:	Page 56	Page 56
Temperature / Grading:	Page 56	Page 56

Minimum measures

K/V/E-3/8-V/K..-L../16-1/SV3A80/23/V-../SIL-3A
L1: ≥ 50 mm
U: 55 mm

Approvals / Certificates

3A / ABS / ATEX / BV / EAC / GL / PED

Minimum measures

AVA/V/BKN-..-V/K..-L../16-1/SV3A80/23/V-3A
L1: ≥ 50 mm
U: 55 mm

Approvals / Certificates

3A / ABS / ATEX / BV / EAC / GL / PED

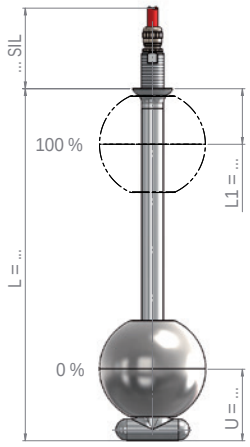

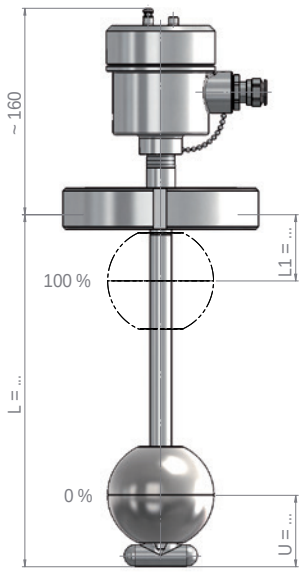

The Magnetic Float Level Transmitter are based on a modular design and can be arranged individually.
Type key page 10 - 13

* ATEX-design = guide tube length ≥ 4000 mm by calculation

** = Ra ≤ 0.4µm for all wetted parts

Electrical connection

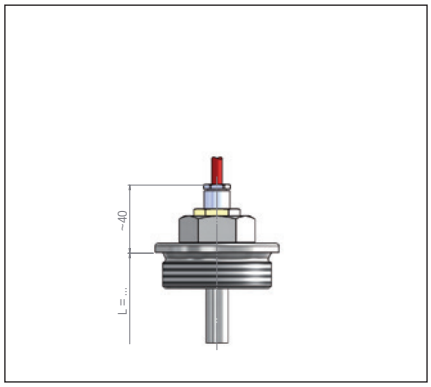

Connection type: K
Material quality: According as cable type
Cable entry: PG or metric
Ingress protection class: IP 55 (optional IP 68)
Ambient temperature: -40°C ... 200°C

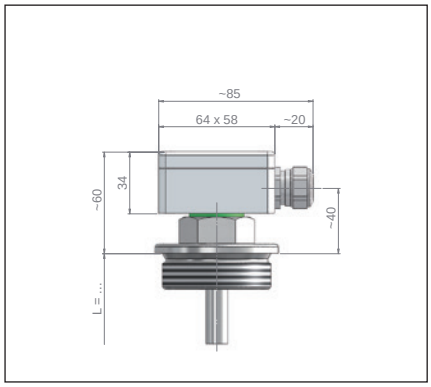

Connection type: ALE
Material quality: Aluminium coated RAL 7001
Cable entry: M20 x 1.5
Ingress protection class: IP 65
Ambient temperature: -40°C ... 100°C

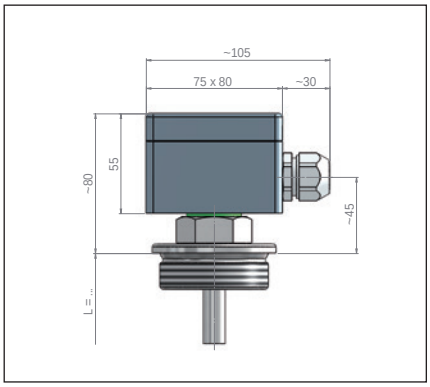

Connection type: APA / APB (Ex)
Material quality: Polyester
Cable entry: M20 x 1.5
Ingress protection class: IP 65
Ambient temperature: -10°C ... 100°C

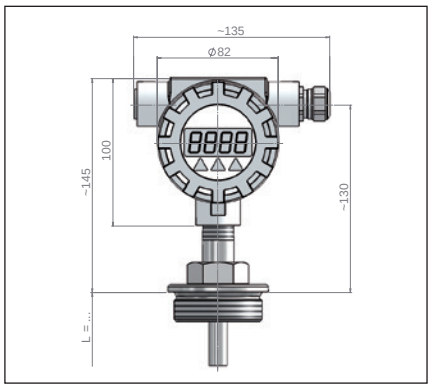

Connection type: DAALA
Material quality: Aluminium
Cable entry: M20 x 1.5
Ingress protection class: IP 65
Ambient temperature: -40°C ... 60°C

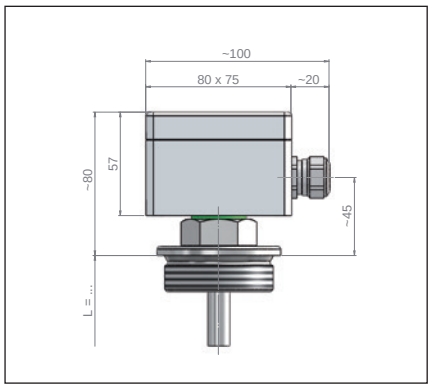

Connection type: ALF
Material quality: Aluminium coated RAL 7001
Cable entry: M20 x 1.5
Ingress protection class: IP 65
Ambient temperature: -40°C ... 100°C

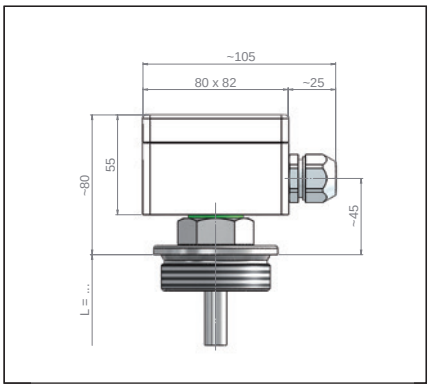

Connection type: ABA
Material quality: ABS
Cable entry: M20 x 1.5
Ingress protection class: IP 65
Ambient temperature: -10°C ... 80°C

Approvals / Certificates

Further electrical connections page 52 - 54
Further process connection according to type key page 10
Further floats page 48 - 51

The magnetic float level transmitter are based on a modular design and can be arranged individually.
Type key page 10 - 13

Heinrich Kübler AG
Ruessenstrasse 4 | CH-6340 Baar | Phone +41 (0)41 766 62 62 | Fax +41 (0)41 766 62 63 | E-Mail info@kubler.ch | Internet www.kubler.ch

Type	K/ME/E-3/8-ME/K..-L../12-1/SB40/15/R-../PVC	ALE/ME/R-1½-ME/K..-L../12-1/SVK44/15/V
Material quality:	Brass (Float Buna)	Brass (Float Stainless steel)
Electrical connection:	PVC connection cable	ALE Aluminium terminal box
Process connection:	G 3/8“	G 1½“
Guide tube:	Ø 12 mm (Accuracy type K5.. Ø 14 mm)	Ø 12 mm (Accuracy type K5.. Ø 14 mm)
Length of instrument:	≤ 5000 mm	≤ 5000 mm
Float:	SB40/15/R Ø 40 mm	SVK44/15/V Ø 44 mm
Specific gravity:	≥ 700 kg/m³	≥ 800 kg/m³
Design pressure:	-1 bar ... 6 bar	-1 bar ... 25 bar
Design temperature:	-10°C ... 80°C	-10°C ... 150°C
Ingress protection class:	IP 55 (optional IP 68)	IP 65
Mounting position:	Vertical +/-30°	Vertical +/-30°
Accuracy		
Type K.. (-30°C ... 130°C) Accuracy:	5 / 10 / 12.7 / 15 mm	5 / 10 / 12.7 / 15 mm
Type K..HTF (-40°C ... 200°C) Accuracy:	-	5 / 10 / 15 mm
Type K..HT (-40°C ... 250°C) Accuracy:	-	-
Option control unit / Page 55		
Control unit:	- Programmable - Hart-programmable - Profibus PA - Foundation Fieldbus	- Programmable - Hart-programmable - Profibus PA - Foundation Fieldbus
Option temperature probe / Page 56		
Temperature probe:	Pt-100 / Pt-1000	Pt-100 / Pt-1000
Norm:	IEC 751 Kl.B	IEC 751 Kl.B
Option temperature switch / Page 56		
Function:	Normally closed (NC) or normally open (NO)	Normally closed (NC) or normally open (NO)
Switching capacity:	Page 56	Page 56
Accuracy / Hysterese:	Page 56	Page 56
Temperature / Grading:	Page 56	Page 56

Minimum measures

K/ME/E-3/8-ME/K..-L../12-1/SB40/15/R-../PVC
L1: ≥ 30 mm
U: 50 mm

Approvals / Certificates

ABS / BV / EAC / GL / LR / PED

Minimum measures

ALE/ME/R-1½-ME/K..-L../12-1/SVK44/15/V
L1: ≥ 65 mm
U: 45 mm

Approvals / Certificates

ABS / BV / EAC / GL / LR / PED

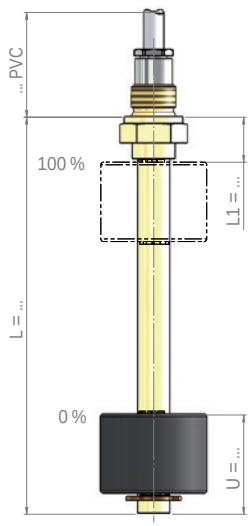

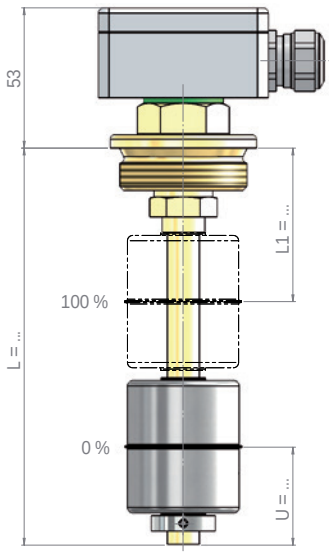

The magnetic float level transmitter are based on a modular design and can be arranged individually.
Type key page 10 - 13

Magnetic Float Level Transmitter / Polyamide - flexible

Electrical connection

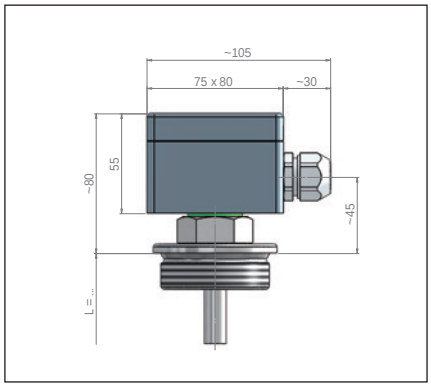

Connection type: APA / APB (Ex)
Material quality: Polyester
Cable entry: M20 x 1.5
Ingress protection class: IP 65
Ambient temperature: -10°C ... 100°C

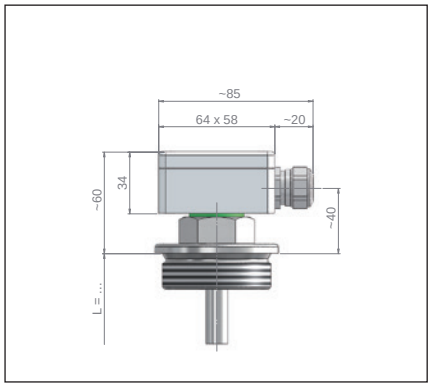

Connection type: ALE
Material quality: Aluminium coated RAL 7001
Cable entry: M20 x 1.5
Ingress protection class: IP 65
Ambient temperature: -40°C ... 100°C

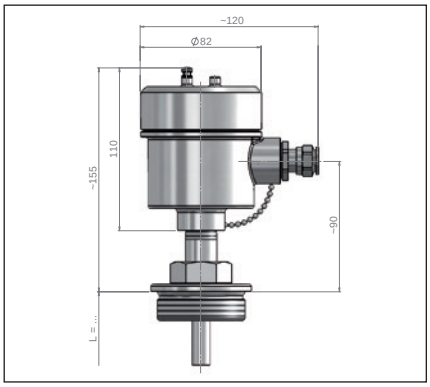

Connection type: AVA / AVDA (Exd)
Material quality: Stainless steel A4 (SS316)
Cable entry: M20 x 1.5
Ingress protection class: IP 67 / (Exd / IP 68)
Ambient temperature: -40°C ... 85°C

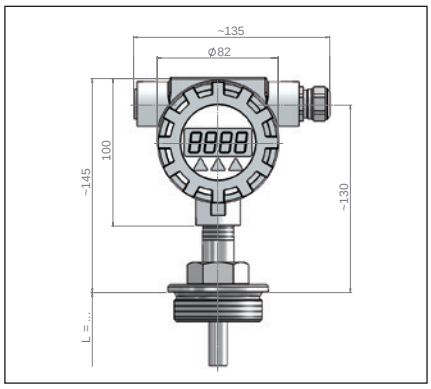

Connection type: DAALA
Material quality: Aluminium
Cable entry: M20 x 1.5
Ingress protection class: IP 65
Ambient temperature: -40°C ... 60°C

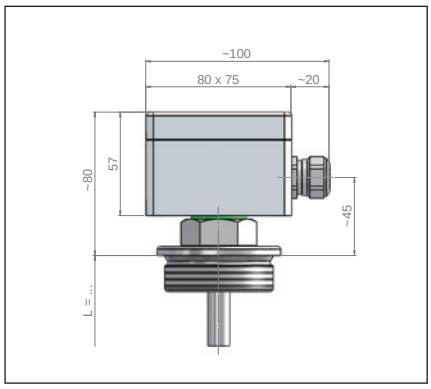

Connection type: ALF
Material quality: Aluminium coated RAL 7001
Cable entry: M20 x 1.5
Ingress protection class: IP 65
Ambient temperature: -40°C ... 100°C

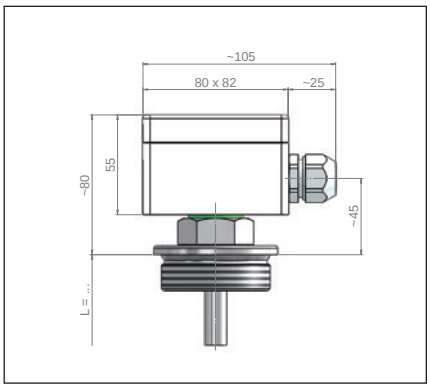

Connection type: ABA
Material quality: ABS
Cable entry: M20 x 1.5
Ingress protection class: IP 65
Ambient temperature: -10°C ... 80°C

Approvals / Certificates

EAC

Further electrical connections page 52 - 54
Further process connection according to type key page 10
Further floats page 48 - 51

The magnetic float level transmitter are based on a modular design and can be arranged individually.
Type key page 10 - 13

Heinrich Kübler AG
Ruessenstrasse 4 | CH-6340 Baar | Phone +41 (0)41 766 62 62 | Fax +41 (0)41 766 62 63 | E-Mail info@kubler.ch | Internet www.kubler.ch

Type	ALE/V/R-1½-PA/K12.7-L../12-1/SVK44/15/V-FG	ALE/ME/R-2-PA/K12.7-L../12-1/SV52/15/V-FG
Material quality:	Polyamide / Stainless steel	Polyamide / Brass / Stainless steel
Electrical connection:	ALE Aluminium terminal box	ALE Aluminium terminal box
Process connection:	G 1½“	G 2“
Guide tube:	Ø 12 mm	Ø 12 mm
Length of instrument:	≤ 5000 mm	≤ 5000 mm
Float:	SVK44/15/V Ø 44 mm	SV52/15/V Ø 52 mm
Specific gravity:	≥ 800 kg/m³	≥ 700 kg/m³
Design pressure:	-1 bar ... 1 bar	-1 bar ... 1 bar
Design temperature:	-10°C ... 80°C	-10°C ... 80°C
Ingress protection class:	IP 65	IP 65
Mounting position:	Vertical +/-30°	Vertical +/-30°
Accuracy		
Type K.. (-30°C ... 130°C) Accuracy:	12.7 mm	12.7 mm
Type K..HTF (-40°C ... 200°C) Accuracy:	-	-
Type K..HT (-40°C ... 250°C) Accuracy:	-	-
Option control unit / Page 55		
Control unit:	- Programmable - Hart-programmable - Profibus PA - Foundation Fieldbus	- Programmable - Hart-programmable - Profibus PA - Foundation Fieldbus
Option temperature probe / Page 56		
Temperature probe:	Pt-100 / Pt-1000	Pt-100 / Pt-1000
Norm:	IEC 751 Kl.B	IEC 751 Kl.B
Option temperature switch / Page 56		
Function:	Normally closed (NC) or normally open (NO)	Normally closed (NC) or normally open (NO)
Switching capacity:	Page 56	Page 56
Accuracy / Hysterese:	Page 56	Page 56
Temperature / Grading:	Page 56	Page 56

Minimum measures

ALE/V/R-1½-PA/K12.7-L../12-1/SVK44/15/V-FG
L1: ≥ 70 mm
U: 45 mm

Approvals / Certificates

EAC

Minimum measures

ALE/ME/R-2-PA/K12.7-L../12-1/SV52/15/V-FG
L1: ≥ 70 mm
U: 45 mm

Approvals / Certificates

EAC

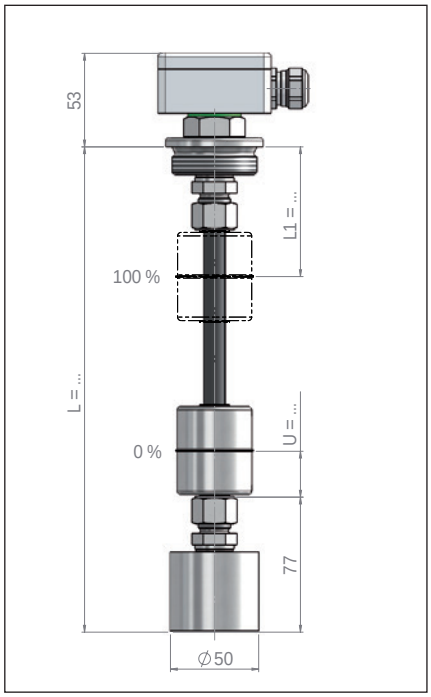

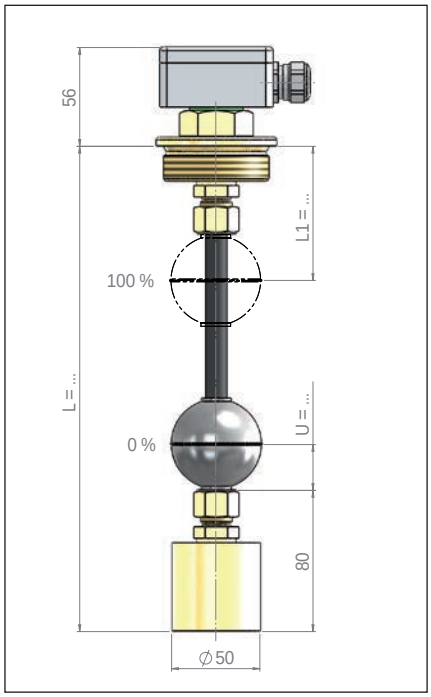

The magnetic float level transmitter are based on a modular design and can be arranged individually.
Type key page 10 - 13

Electrical connection

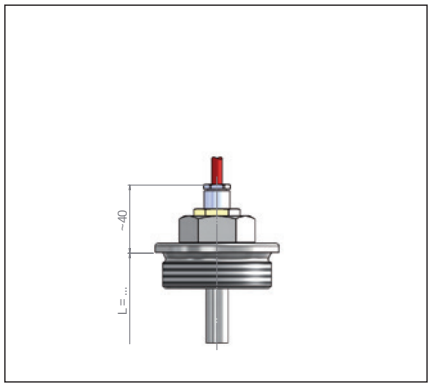

Connection type: K
Material quality: According as cable type
Cable entry: PG or metric
Ingress protection class: IP 55 (optional IP 68)
Ambient temperature: -40°C ... 200°C

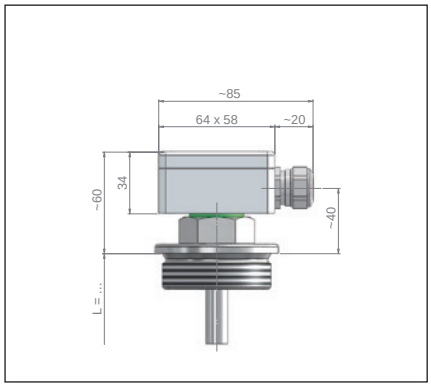

Connection type: ALE
Material quality: Aluminium coated RAL 7001
Cable entry: M20 x 1.5
Ingress protection class: IP 65
Ambient temperature: -40°C ... 100°C

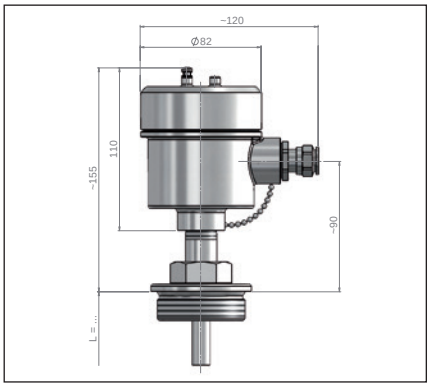

Connection type: AVA / AVDA (Exd)
Material quality: Stainless steel A4 (SS316)
Cable entry: M20 x 1.5
Ingress protection class: IP 67 / (Exd / IP 68)
Ambient temperature: -40°C ... 85°C

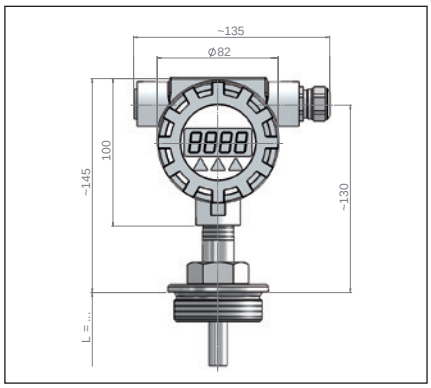

Connection type: DAALA
Material quality: Aluminium
Cable entry: M20 x 1.5
Ingress protection class: IP 65
Ambient temperature: -40°C ... 60°C

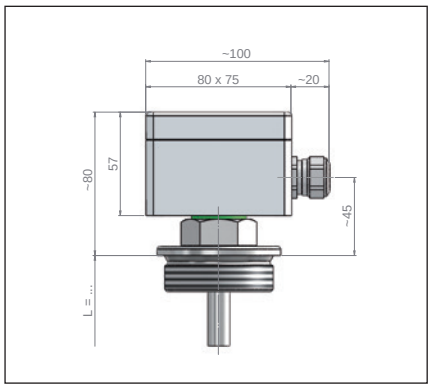

Connection type: ALF
Material quality: Aluminium coated RAL 7001
Cable entry: M20 x 1.5
Ingress protection class: IP 65
Ambient temperature: -40°C ... 100°C

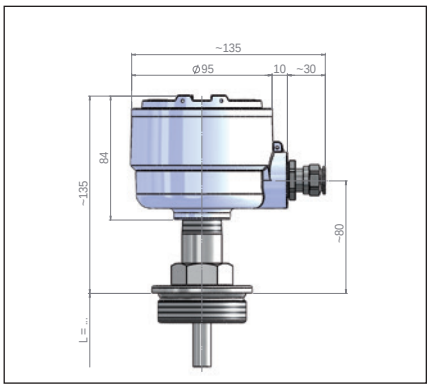

Connection type: ALDA (Exd)
Material quality: Aluminium coated RAL 9006
Cable entry: M20 x 1.5
Ingress protection class: IP 68
Ambient temperature: -40°C ... 100°C

Approvals / Certificates

ATEX*

II 1/2G Ex c ia IIC T6 - T3 Ga/Gb	II 2G Ex c d IIC T6 - T4 Gb		II 2G Ex c d IIC T6 - T4 Gb	
II 1/2G Ex c d ia IIC T6 - T4 Ga/Gb	II 2D Ex c tb IIIC T80°C - T190°C or T125°C Db IP6X		II 2D Ex c tb IIIC T80°C - T95°C or T125°C Db IP6X	
Liquid temperature Exia max. 180°C / Exd max. 120°C				
Type of protection intrinsic safety Ex ia IIC passive multi-pole device	U_i ≤ 30 V		I_i ≤ 150 mA	
Type of protection intrinsic safety Ex ia IIC with built-in separately certified measuring transducer			see appropriate special certificate	
Type of protection intrinsic safety Ex ia IIC switch or temperature switch	I_i ≤ 100 mA			
Type of protection „flameproof enclosure“	U_N ≤ 28 V		I_i ≤ 100 mA	P_i ≤ 700 mW
Type of protection „flameproof enclosure“ passive multi-pole device	U_N ≤ 30 VDC/AC		I_N ≤ 150 mA	
Type of protection „flameproof enclosure“ temperature sensor / switch	U_N ≤ 100 VDC/AC		I_N ≤ 300 mA	P_{SN} ≤ 1 W	P_{FN} ≤ 700 mW

Further electrical connections page 52 - 54
Further process connection according to type key page 10
Further floats page 48 - 51

The magnetic float level transmitter are based on a modular design and can be arranged individually.
Type key page 10 - 13

* = The approval is dependent on the equipment combination

Heinrich Kübler AG
Ruessenstrasse 4 | CH-6340 Baar | Phone +41 (0)41 766 62 62 | Fax +41 (0)41 766 62 63 | E-Mail info@kubler.ch | Internet www.kubler.ch

Type	K/TI/E-3/8-TI/K..-L../12-1/STIK44/14/V-../SIL	ALE/TI/R-2-TI/K..-L../12-1/STI52/14/V
Material quality:	Titanium	Titanium
Electrical connection:	Silicone connection cable	ALE Aluminium terminal box
Process connection:	G 3/8“	G 2“
Guide tube:	Ø 12 mm	Ø 12 mm
Length of instrument:	≤ 5000 mm	≤ 5000 mm
Float:	STIK44/14/V Ø 44 mm	STI52/14/V Ø 52 mm
Specific gravity:	≥ 750 kg/m³	≥ 600 kg/m³
Design pressure:	-1 bar ... 15 bar	-1 bar ... 25 bar
Design temperature:	-10°C ... 150°C	-10°C ... 150°C
Ingress protection class:	IP 55 (optional IP 68)	IP 65
Mounting position:	Vertical +/-30°	Vertical +/-30°
Accuracy		
Type K.. (-30°C ... 130°C) Accuracy:	5 / 10 / 12.7 / 15 mm	5 / 10 / 12.7 / 15 mm
Type K..HTF (-40°C ... 200°C) Accuracy:	5 / 10 / 15 mm	5 / 10 / 15 mm
Type K..HT (-40°C ... 250°C) Accuracy:	-	-
Option control unit / Page 55		
Control unit:	- Programmable - Hart-programmable - Profibus PA - Foundation Fieldbus	- Programmable - Hart-programmable - Profibus PA - Foundation Fieldbus
Option temperature probe / Page 56		
Temperature probe:	Pt-100 / Pt-1000	Pt-100 / Pt-1000
Norm:	IEC 751 Kl.B	IEC 751 Kl.B
Option temperature switch / Page 56		
Function:	Normally closed (NC) or normally open (NO)	Normally closed (NC) or normally open (NO)
Switching capacity:	Page 56	Page 56
Accuracy / Hysterese:	Page 56	Page 56
Temperature / Grading:	Page 56	Page 56

Minimum measures

K/TI/E-3/8-TI/K..-L../12-1/STIK44/14/V-../SIL
L1: ≥ 50 mm
U: 45 mm

Approvals / Certificates

ATEX / EAC / PED / WHG

Minimum measures

ALE/TI/R-2-TI/K..-L../12-1/STI52/14/V
L1: ≥ 55 mm
U: 45 mm

Approvals / Certificates

ATEX / EAC / PED / WHG

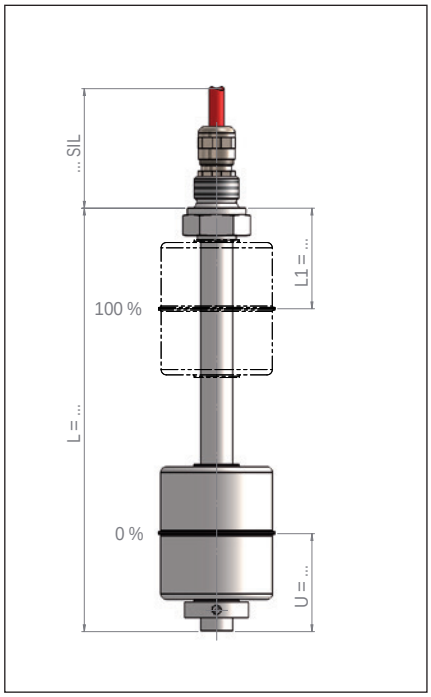

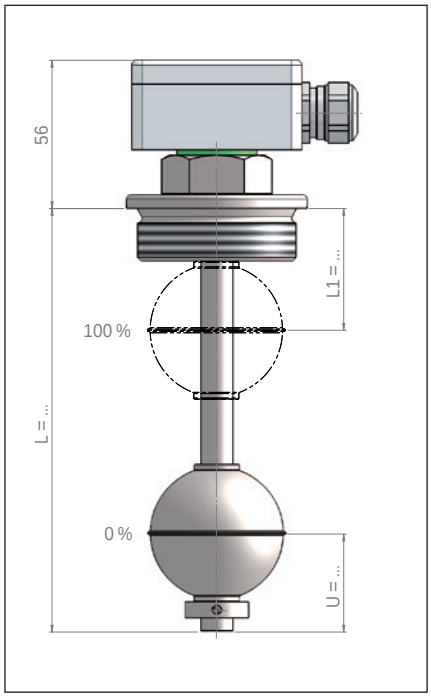

The magnetic float level transmitter are based on a modular design and can be arranged individually.
Type key page 10 - 13

Electrical connection

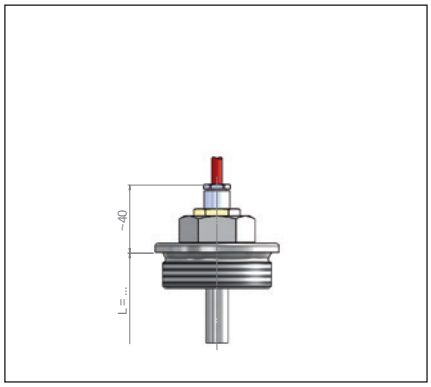

Connection type: K
Material quality: According as cable type
Cable entry: PG or metric
Ingress protection class: IP 55 (optional IP 68)
Ambient temperature: -40°C ... 200°C

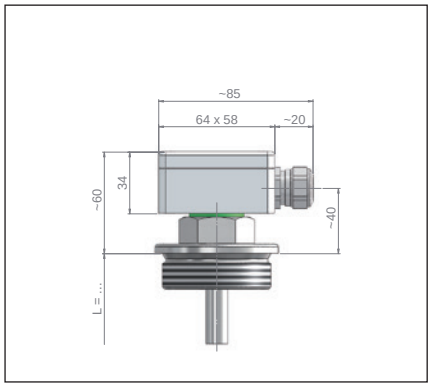

Connection type: ALE
Material quality: Aluminium coated RAL 7001
Cable entry: M20 x 1.5
Ingress protection class: IP 65
Ambient temperature: -40°C ... 100°C

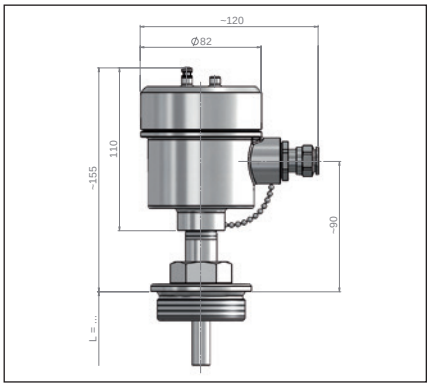

Connection type: AVA / AVDA (Exd)
Material quality: Stainless steel A4 (SS316)
Cable entry: M20 x 1.5
Ingress protection class: IP 67 / (Exd / IP 68)
Ambient temperature: -40°C ... 85°C

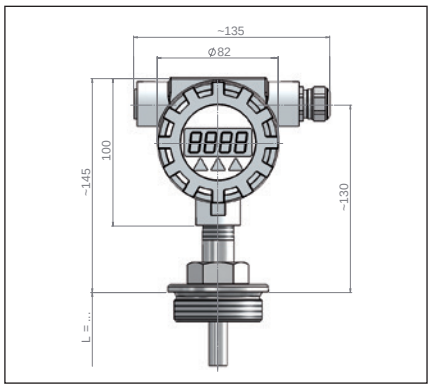

Connection type: DAALA
Material quality: Aluminium
Cable entry: M20 x 1.5
Ingress protection class: IP 65
Ambient temperature: -40°C ... 60°C

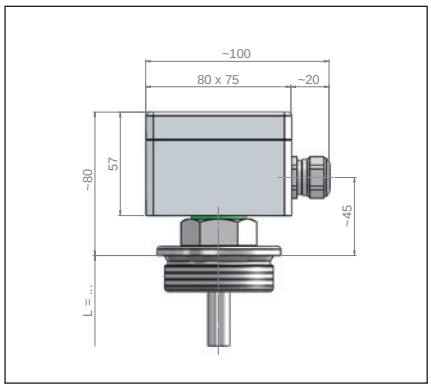

Connection type: ALF
Material quality: Aluminium coated RAL 7001
Cable entry: M20 x 1.5
Ingress protection class: IP 65
Ambient temperature: -40°C ... 100°C

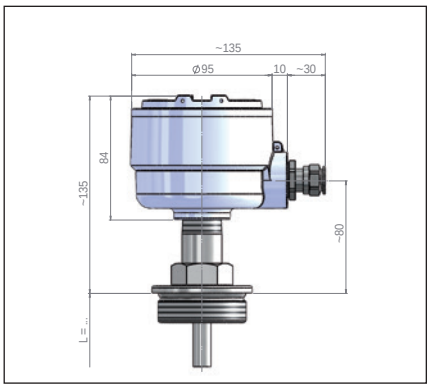

Connection type: ALDA (Exd)
Material quality: Aluminium coated RAL 9006
Cable entry: M20 x 1.5
Ingress protection class: IP 68
Ambient temperature: -40°C ... 100°C

Approvals / Certificates

ATEX*

II 1/2G Ex c ia IIC T6 - T3 Ga/Gb	II 2G Ex c d IIC T6 - T4 Gb		II 2G Ex c d IIC T6 - T4 Gb	
II 1/2G Ex c d ia IIC T6 - T4 Ga/Gb	II 2D Ex c tb IIIC T80°C - T190°C or T125°C Db IP6X		II 2D Ex c tb IIIC T80°C - T95°C or T125°C Db IP6X	
Liquid temperature Exia max. 180°C / Exd max. 120°C				
Type of protection intrinsic safety Ex ia IIC passive multi-pole device	U_i ≤ 30 V	I_i ≤ 150 mA		
Type of protection intrinsic safety Ex ia IIC with built-in separately certified measuring transducer		see appropriate special certificate		
Type of protection intrinsic safety Ex ia IIC switch or temperature switch	I_i ≤ 100 mA			
Type of protection „flameproof enclosure“	U_N ≤ 28 V	I_i ≤ 100 mA	P_i ≤ 700 mW	
Type of protection „flameproof enclosure“ passive multi-pole device	U_N ≤ 30 VDC/AC	I_N ≤ 150 mA		
Type of protection „flameproof enclosure“ temperature sensor / switch	U_N ≤ 100 VDC/AC	I_N ≤ 300 mA	P_{SN} ≤ 1 W	P_{FN} ≤ 700 mW

Further electrical connections page 52 - 54
Further process connection according to type key page 10
Further floats page 48 - 51

The magnetic float level transmitter are based on a modular design and can be arranged individually.
Type key page 10 - 13

* = The approval is dependent on the equipment combination

Heinrich Kübler AG
Ruessenstrasse 4 | CH-6340 Baar | Phone +41 (0)41 766 62 62 | Fax +41 (0)41 766 62 63 | E-Mail info@kubler.ch | Internet www.kubler.ch

Type	K/HC/E-3/8-HC/K..-L../12-1/SHCK44/15/V-../SIL	ALE/HC/R-1½-HC/K..-L../12-1/SHCK44/15/V
Material quality:	Alloy C	Alloy C
Electrical connection:	Silicone connection cable	ALE Aluminium terminal box
Process connection:	G 3/8“	G 1½“
Guide tube:	Ø 12 mm	Ø 12 mm
Length of instrument:	≤ 3000 mm	≤ 3000 mm
Float:	SHCK44/15/V Ø 44 mm	SHCK44/15/V Ø 44 mm
Specific gravity:	≥ 1000 kg/m³	≥ 1000 kg/m³
Design pressure:	-1 bar ... 45 bar	-1 bar ... 6 bar
Design temperature:	-40°C ... 180°C	See accuracy
Ingress protection class:	IP 55 (optional IP 68)	IP 65
Mounting position:	Vertical +/-30°	Vertical +/-30°
Accuracy		
Type K.. (-30°C ... 130°C) Accuracy:	5 / 10 / 12.7 / 15 mm	5 / 10 / 12.7 / 15 mm
Type K..HTF (-40°C ... 200°C) Accuracy:	5 / 10 / 15 mm	5 / 10 / 15 mm
Type K..HT (-40°C ... 250°C) Accuracy:	10 / 15 mm	10 / 15 mm
Option control unit / Page 55		
Control unit:	- Programmable - Hart-programmable - Profibus PA - Foundation Fieldbus	- Programmable - Hart-programmable - Profibus PA - Foundation Fieldbus
Option temperature probe / Page 56		
Temperature probe:	Pt-100 / Pt-1000	Pt-100 / Pt-1000
Norm:	IEC 751 Kl.B	IEC 751 Kl.B
Option temperature switch / Page 56		
Function:	Normally closed (NC) or normally open (NO)	Normally closed (NC) or normally open (NO)
Switching capacity:	Page 56	Page 56
Accuracy / Hysterese:	Page 56	Page 56
Temperature / Grading:	Page 56	Page 56

Minimum measures

K/HC/E-3/8-HC/K..-L../12-1/SHCK44/15/V-../SIL
L1: ≥ 50 mm
U: 45 mm

Approvals / Certificates

ATEX / EAC / PED / WHG

Minimum measures

ALE/HC/R-1½-HC/K..-L../12-1/SHCK44/15/V
L1: ≥ 50 mm
U: 45 mm

Approvals / Certificates

ATEX / EAC / PED / WHG

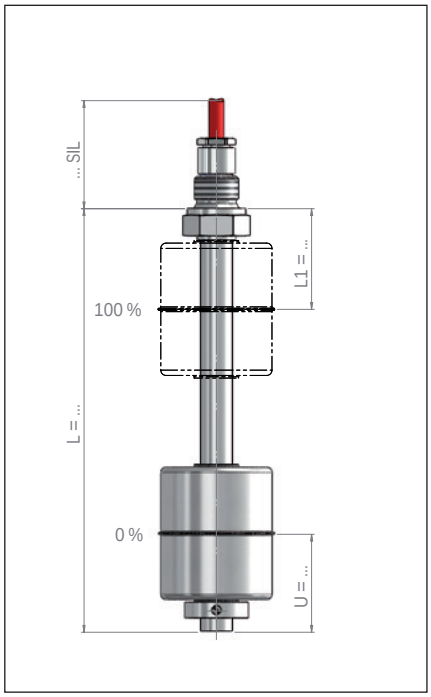

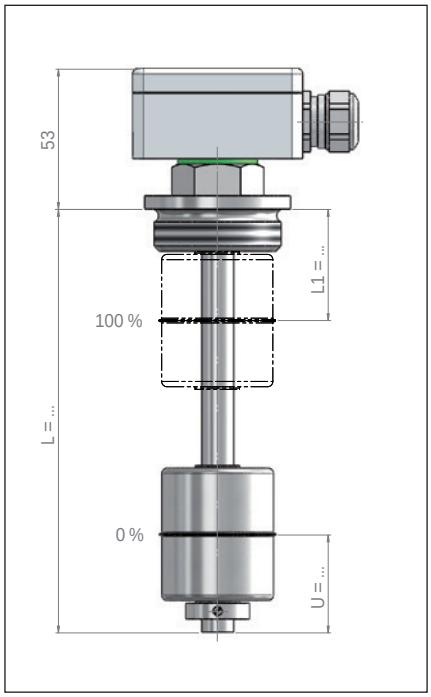

The magnetic float level transmitter are based on a modular design and can be arranged individually.
Type key page 10 - 13

Electrical connection

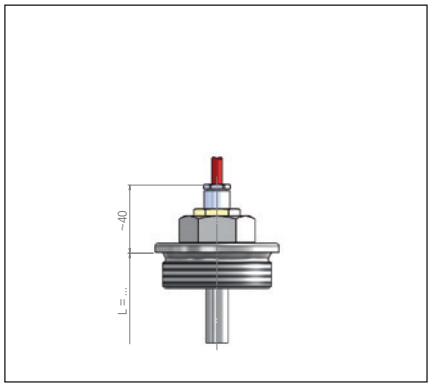

Connection type: K
Material quality: According as cable type
Cable entry: PG or metric
Ingress protection class: IP 55 (optional IP 68)
Ambient temperature: -40°C ... 200°C

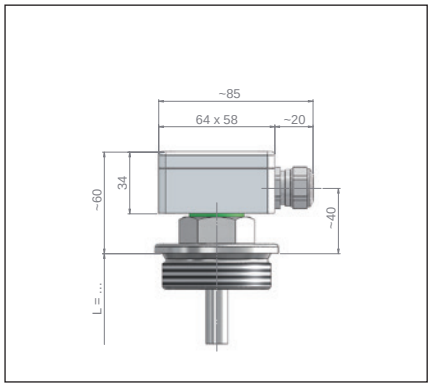

Connection type: ALE
Material quality: Aluminium coated RAL 7001
Cable entry: M20 x 1.5
Ingress protection class: IP 65
Ambient temperature: -40°C ... 100°C

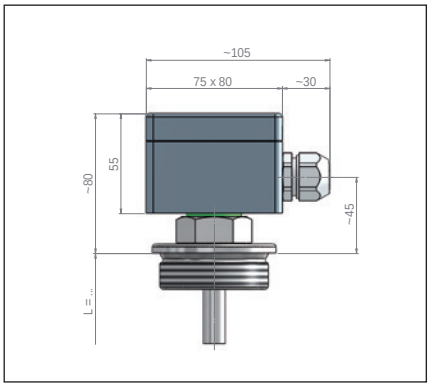

Connection type: APA / APB (Ex)
Material quality: Polyester
Cable entry: M20 x 1.5
Ingress protection class: IP 65
Ambient temperature: -10°C ... 100°C

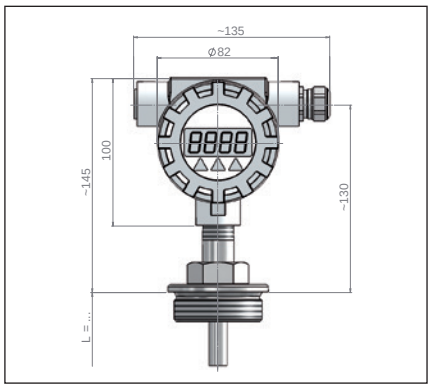

Connection type: DAALA
Material quality: Aluminium
Cable entry: M20 x 1.5
Ingress protection class: IP 65
Ambient temperature: -40°C ... 60°C

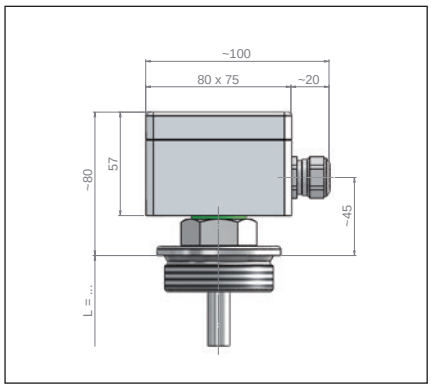

Connection type: ALF
Material quality: Aluminium coated RAL 7001
Cable entry: M20 x 1.5
Ingress protection class: IP 65
Ambient temperature: -40°C ... 100°C

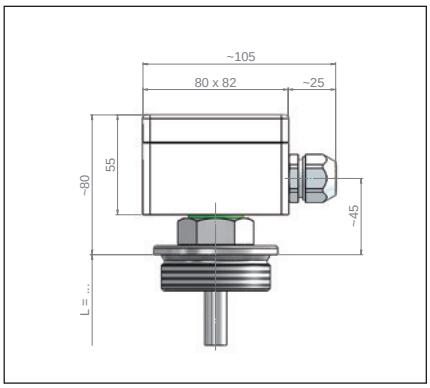

Connection type: ABA
Material quality: ABS
Cable entry: M20 x 1.5
Ingress protection class: IP 65
Ambient temperature: -10°C ... 80°C

Approvals / Certificates

DIBt WHG §19 EAC TÜV SÜD

Further electrical connections page 52 - 54
Further process connection according to type key page 10
Further floats page 48 - 51

The magnetic float level transmitter are based on a modular design and can be arranged individually.
Type key page 10 - 13

Heinrich Kübler AG
Ruessenstrasse 4 | CH-6340 Baar | Phone +41 (0)41 766 62 62 | Fax +41 (0)41 766 62 63 | E-Mail info@kubler.ch | Internet www.kubler.ch

Type	K/P/E-1-P/K..-L../16-1/SPK54/22/R-../PVC	K/P/E-1-P/K..-L../20-1/SPK78/25/R-../PVC
Material quality:	PVC	PVC
Electrical connection:	PVC connection cable	PVC connection cable
Process connection:	G 1“	G 1“
Guide tube:	Ø 16 mm	Ø 20 mm
Length of instrument:	≤ 3000 mm	≤ 6000 mm
Float:	SPK54/22/R Ø 54 mm	SPK78/25/R Ø 78 mm
Specific gravity:	≥ 750 kg/m³	≥ 600 kg/m³
Design pressure:	-1 bar ... 1 bar	-1 bar ... 1 bar
Design temperature:	-15°C ... 60°C	-15°C ... 60°C
Ingress protection class:	IP 55 (optional IP 68)	IP 55 (optional IP 68)
Mounting position:	Vertical +/-30°	Vertical +/-30°
Accuracy		
Type K.. (-30°C ... 130°C) Accuracy:	5 / 10 / 12.7 / 15 mm	5 / 10 / 12.7 / 15 mm
Type K..HTF (-40°C ... 200°C) Accuracy:	-	-
Type K..HT (-40°C ... 250°C) Accuracy:	-	-
Option control unit / Page 55		
Control unit:	- Programmable - Hart-programmable - Profibus PA - Foundation Fieldbus	- Programmable - Hart-programmable - Profibus PA - Foundation Fieldbus
Option temperature probe / Page 56		
Temperature probe:	Pt-100 / Pt-1000	Pt-100 / Pt-1000
Norm:	IEC 751 Kl.B	IEC 751 Kl.B
Option temperature switch / Page 56		
Function:	Normally closed (NC) or normally open (NO)	Normally closed (NC) or normally open (NO)
Switching capacity:	Page 56	Page 56
Accuracy / Hysterese:	Page 56	Page 56
Temperature / Grading:	Page 56	Page 56

Minimum measures

K/P/E-1-P/K..-L../16-1/SPK54/22/R-../PVC
L1: ≥ 65 mm
U: 50 mm

Approvals / Certificates

EAC / PED / WHG

Minimum measures

K/P/E-1-P/K..-L../20-1/SPK78/25/R-../PVC
L1: ≥ 80 mm
U: 65 mm

Approvals / Certificates

EAC / PED / WHG

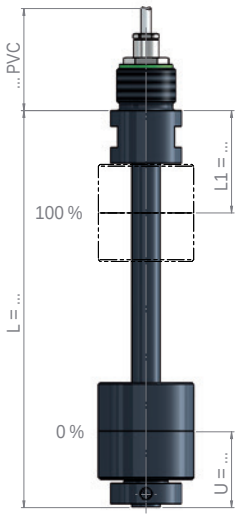

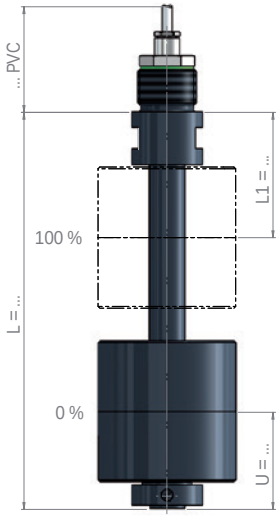

The magnetic float level transmitter are based on a modular design and can be arranged individually.
Type key page 10 - 13

Electrical connection

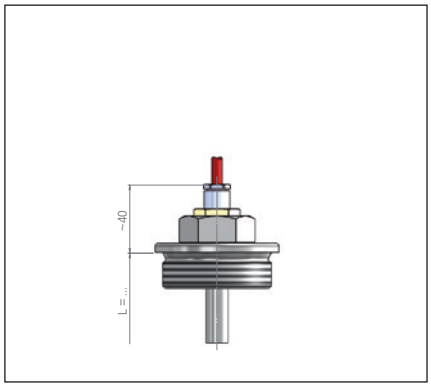

Connection type: K
Material quality: According as cable type
Cable entry: PG or metric
Ingress protection class: IP 55 (optional IP 68)
Ambient temperature: -40°C ... 200°C

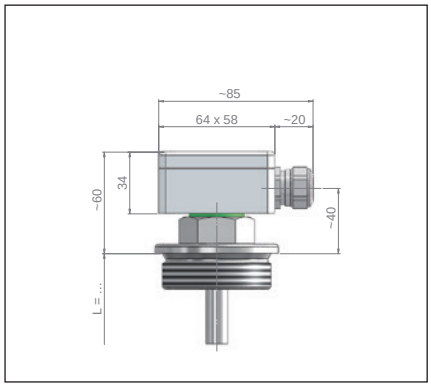

Connection type: ALE
Material quality: Aluminium coated RAL 7001
Cable entry: M20 x 1.5
Ingress protection class: IP 65
Ambient temperature: -40°C ... 100°C

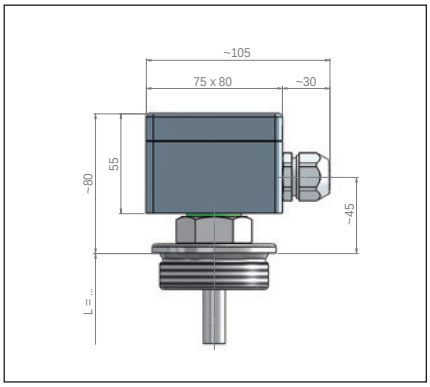

Connection type: APA / APB (Ex)
Material quality: Polyester
Cable entry: M20 x 1.5
Ingress protection class: IP 65
Ambient temperature: -10°C ... 100°C

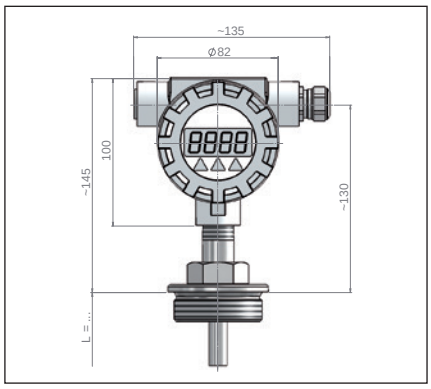

Connection type: DAALA
Material quality: Aluminium
Cable entry: M20 x 1.5
Ingress protection class: IP 65
Ambient temperature: -40°C ... 60°C

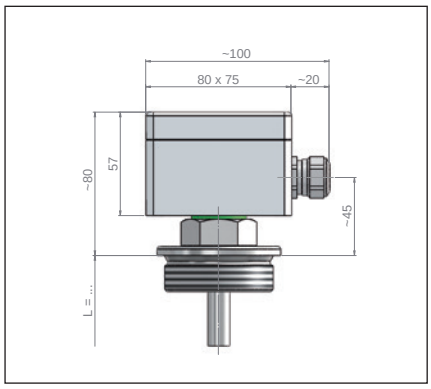

Connection type: ALF
Material quality: Aluminium coated RAL 7001
Cable entry: M20 x 1.5
Ingress protection class: IP 65
Ambient temperature: -40°C ... 100°C

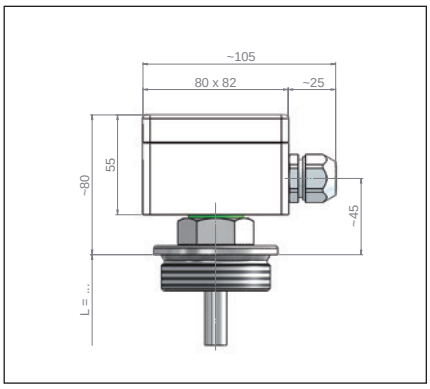

Connection type: ABA
Material quality: ABS
Cable entry: M20 x 1.5
Ingress protection class: IP 65
Ambient temperature: -10°C ... 80°C

Approvals / Certificates

DIBt WHG §19 EAC TÜV SÜD

Further electrical connections page 52 - 54
Further process connection according to type key page 10
Further floats page 48 - 51

The magnetic float level transmitter are based on a modular design and can be arranged individually.
Type key page 10 - 13

Heinrich Kübler AG
Ruessenstrasse 4 | CH-6340 Baar | Phone +41 (0)41 766 62 62 | Fax +41 (0)41 766 62 63 | E-Mail info@kubler.ch | Internet www.kubler.ch

Type	K/PP/E-1-PP/K..-L../16-1/SPPK56/21/R-../PVC	K/PP/E-1-PP/K..-L../20-1/SPPK80/24/R-../PVC
Material quality:	Polypropylene	Polypropylene
Electrical connection:	PVC connection cable	PVC connection cable
Process connection:	G 1“	G 1“
Guide tube:	Ø 16 mm	Ø 20 mm
Length of instrument:	≤ 3000 mm	≤ 6000 mm
Float:	SPPK56/21/R Ø 56 mm	SPPK80/24/R Ø 80 mm
Specific gravity:	≥ 600 kg/m³	≥ 500 kg/m³
Design pressure:	-1 bar ... 1 bar	-1 bar ... 1 bar
Design temperature:	-10°C ... 80°C	-10°C ... 80°C
Ingress protection class:	IP 55 (optional IP 68)	IP 55 (optional IP 68)
Mounting position:	Vertical +/-30°	Vertical +/-30°
Accuracy		
Type K.. (-30°C ... 130°C) Accuracy:	5 / 10 / 12.7 / 15 mm	5 / 10 / 12.7 / 15 mm
Type K..HTF (-40°C ... 200°C) Accuracy:	-	-
Type K..HT (-40°C ... 250°C) Accuracy:	-	-
Option control unit / Page 55		
Control unit:	- Programmable - Hart-programmable - Profibus PA - Foundation Fieldbus	- Programmable - Hart-programmable - Profibus PA - Foundation Fieldbus
Option temperature probe / Page 56		
Temperature probe:	Pt-100 / Pt-1000	Pt-100 / Pt-1000
Norm:	IEC 751 Kl.B	IEC 751 Kl.B
Option temperature switch / Page 56		
Function:	Normally closed (NC) or normally open (NO)	Normally closed (NC) or normally open (NO)
Switching capacity:	Page 56	Page 56
Accuracy / Hysterese:	Page 56	Page 56
Temperature / Grading:	Page 56	Page 56

Minimum measures

K/PP/E-1-PP/K..-L../16-1/SPPK56/21/R-../PVC
L1: ≥ 65 mm
U: 50 mm

Approvals / Certificates

EAC / PED / WHG

Minimum measures

K/PP/E-1-PP/K..-L../20-1/SPPK80/24/R-../PVC
L1: ≥ 80 mm
U: 65 mm

Approvals / Certificates

EAC / PED / WHG

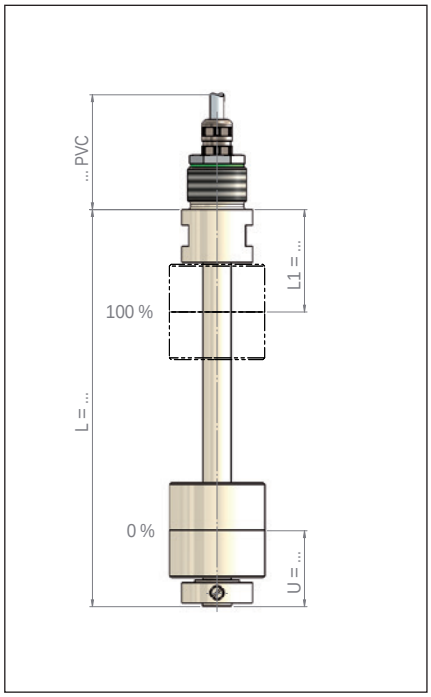

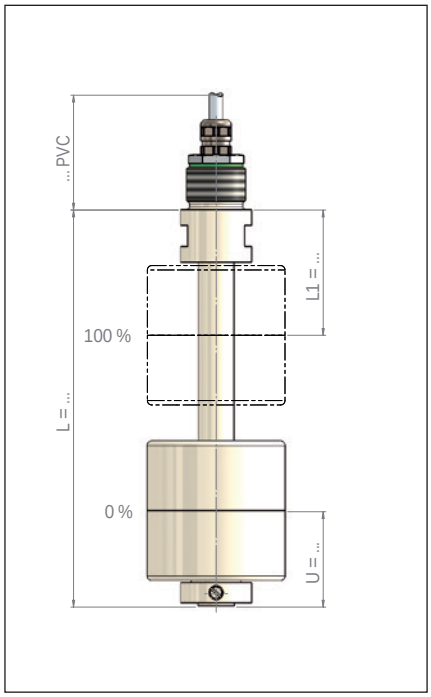

The magnetic float level transmitter are based on a modular design and can be arranged individually.
Type key page 10 - 13

Magnetic Float Level Transmitter / Polypropylene

Type	APA/PP/R-2-PP/K..-L../16-1/SPPK56/21/R	APA/PP/FE-80/10/A-PP/K..-L.../20-1/SPPK80/24/R
Material quality:	Polypropylene	Polypropylene
Electrical connection:	Polyester terminal box	Polyester terminal box
Process connection:	G 2“	Flange EN DN 80 / PN 10 / Form A
Guide tube:	Ø 16 mm	Ø 20 mm
Length of instrument:	≤ 3000 mm	≤ 6000 mm
Float:	SPPK56/21/R Ø 56 mm	SPPK80/24/R Ø 80 mm
Specific gravity:	≥ 600 kg/m³	≥ 500 kg/m³
Design pressure:	-1 bar ... 1 bar	-1 bar ... 1 bar
Design temperature:	-10°C ... 80°C	-10°C ... 80°C
Ingress protection class:	IP 65	IP 65
Mounting position:	Vertical +/-30°	Vertical +/-30°
Accuracy		
Type K.. (-30°C ... 130°C) Accuracy:	5 / 10 / 12.7 / 15 mm	5 / 10 / 12.7 / 15 mm
Type K..HTF (-40°C ... 200°C) Accuracy:	-	-
Type K..HT (-40°C ... 250°C) Accuracy:	-	-
Option control unit / Page 55		
Control unit:	- Programmable - Hart-programmable - Profibus PA - Foundation Fieldbus	- Programmable - Hart-programmable - Profibus PA - Foundation Fieldbus
Option temperature probe / Page 56		
Temperature probe:	Pt-100 / Pt-1000	Pt-100 / Pt-1000
Norm:	IEC 751 Kl.B	IEC 751 Kl.B
Option temperature switch / Page 56		
Function:	Normally closed (NC) or normally open (NO)	Normally closed (NC) or normally open (NO)
Switching capacity:	Page 56	Page 56
Accuracy / Hysterese:	Page 56	Page 56
Temperature / Grading:	Page 56	Page 56

Minimum measures

APA/PP/R-2-PP/K..-L../16-1/SPPK56/21/R
L1: ≥ 65 mm
U: 50 mm

Approvals / Certificates

EAC / PED / WHG

Minimum measures

APA/PP/FE-80/10/A-PP/K..-L.../20-1/SPPK80/24/R
L1: ≥ 80 mm
U: 65 mm

Approvals / Certificates

EAC / PED / WHG

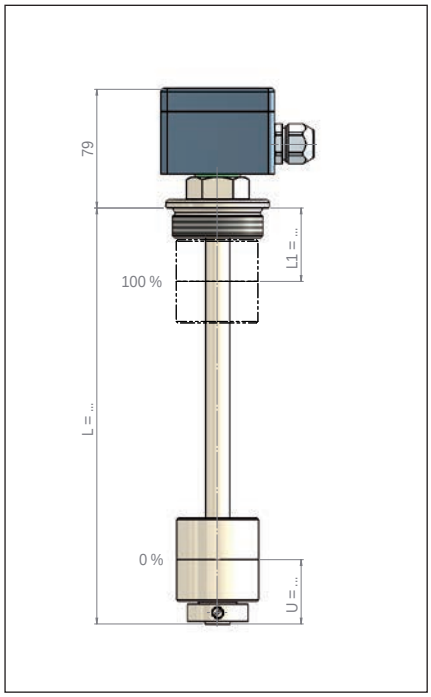

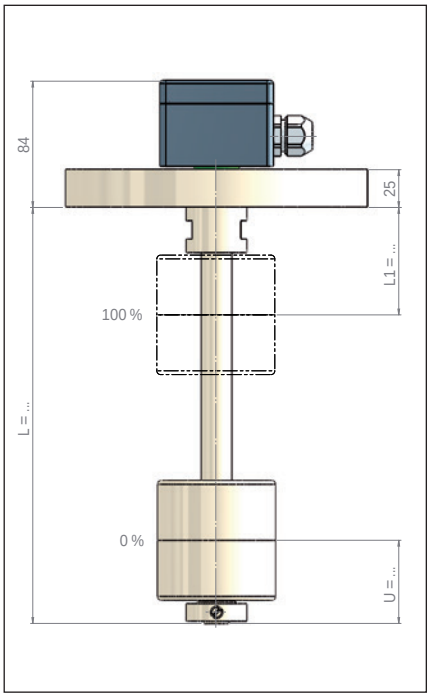

The Magnetic Float Level Transmitter are based on a modular design and can be arranged individually.
Type key page 10 - 13

Heinrich Kübler AG
Ruessenstrasse 4 | CH-6340 Baar | Phone +41 (0)41 766 62 62 | Fax +41 (0)41 766 62 63 | E-Mail info@kubler.ch | Internet www.kubler.ch

Type	ABA/PP/R-1½-PP/K12.7-L../16-1/SPPK44/21/V-FG	ABA/PP/R-2-PP/K12.7-L../16-1/SPPK56/21/R-FG
Material quality:	Polypropylene	Polypropylene
Electrical connection:	Polyester terminal box	Polyester terminal box
Process connection:	G 1½“	G 2“
Guide tube:	Ø 16 mm	Ø 16 mm
Length of instrument:	≤ 3000 mm	≤ 3000 mm
Float:	SPPK44/21/V Ø 44 mm	SPPK56/21/R Ø 56 mm
Specific gravity:	≥ 800 kg/m³	≥ 600 kg/m³
Design pressure:	-1 bar ... 1 bar	-1 bar ... 1 bar
Design temperature:	-10°C ... 80°C	-10°C ... 80°C
Ingress protection class:	IP 65	IP 65
Mounting position:	Vertical +/-30°	Vertical +/-30°
Accuracy		
Type K.. (-30°C ... 130°C) Accuracy:	12.7 mm	12.7 mm
Type K..HTF (-40°C ... 200°C) Accuracy:	-	-
Type K..HT (-40°C ... 250°C) Accuracy:	-	-
Option control unit / Page 55		
Control unit:	- Programmable - Hart-programmable - Profibus PA - Foundation Fieldbus	- Programmable - Hart-programmable - Profibus PA - Foundation Fieldbus
Option temperature probe / Page 56		
Temperature probe:	Pt-100 / Pt-1000	Pt-100 / Pt-1000
Norm:	IEC 751 Kl.B	IEC 751 Kl.B
Option temperature switch / Page 56		
Function:	Normally closed (NC) or normally open (NO)	Normally closed (NC) or normally open (NO)
Switching capacity:	Page 56	Page 56
Accuracy / Hysterese:	Page 56	Page 56
Temperature / Grading:	Page 56	Page 56

Minimum measures

ABA/PP/R-1½-PP/K12.7-L../16-1/SPPK44/21/V-FG
L1: ≥ 50 mm
U: 55 mm

Approvals / Certificates

EAC / PED / WHG

Minimum measures

ABA/PP/R-2-PP/K12.7-L../16-1/SPPK56/21/R-FG
L1: ≥ 65 mm
U: 50 mm

Approvals / Certificates

EAC / PED / WHG

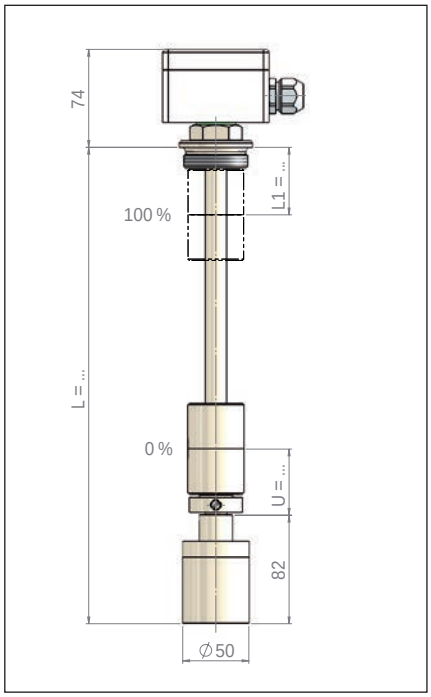

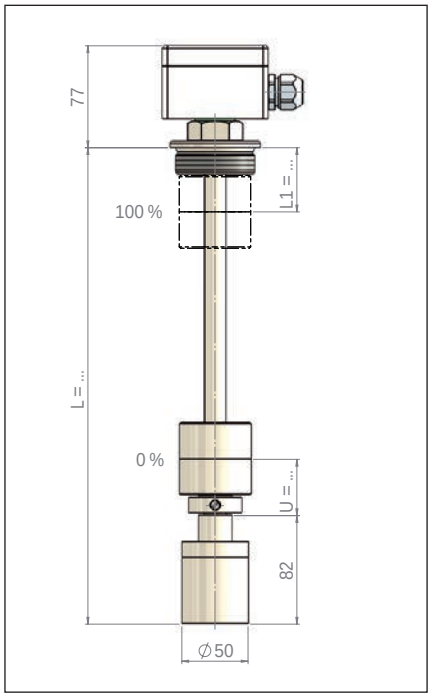

The Magnetic Float Level Transmitter are based on a modular design and can be arranged individually.
Type key page 10 - 13

Electrical connection

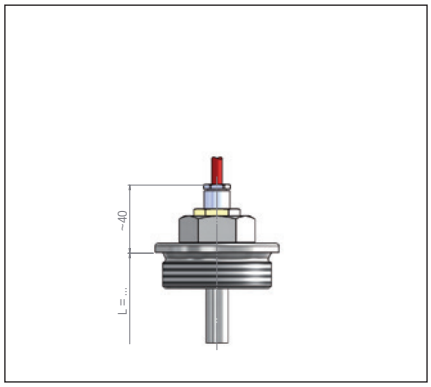

Connection type: K
Material quality: According as cable type
Cable entry: PG or metric
Ingress protection class: IP 55 (optional IP 68)
Ambient temperature: -40°C ... 200°C

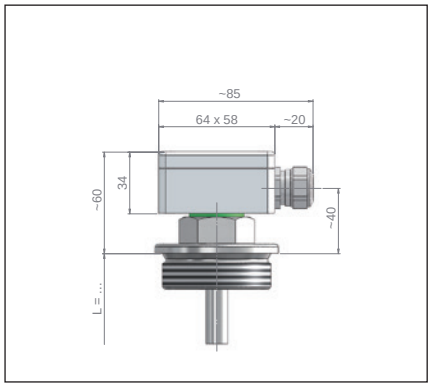

Connection type: ALE
Material quality: Aluminium coated RAL 7001
Cable entry: M20 x 1.5
Ingress protection class: IP 65
Ambient temperature: -40°C ... 100°C

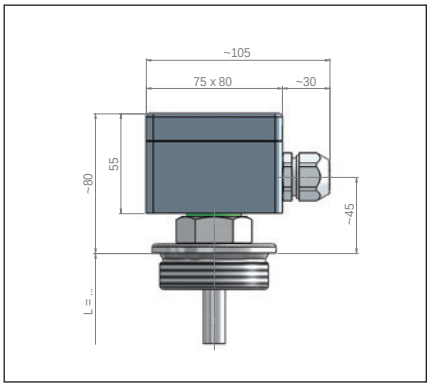

Connection type: APA / APB (Ex)
Material quality: Polyester
Cable entry: M20 x 1.5
Ingress protection class: IP 65
Ambient temperature: -10°C ... 100°C

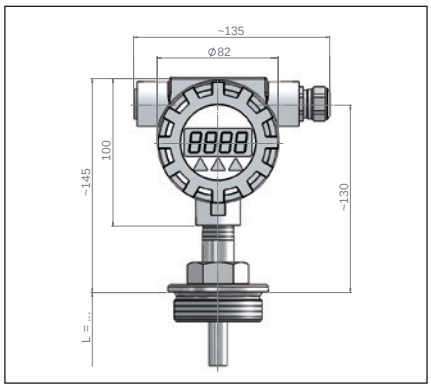

Connection type: DAALA
Material quality: Aluminium
Cable entry: M20 x 1.5
Ingress protection class: IP 65
Ambient temperature: -40°C ... 60°C

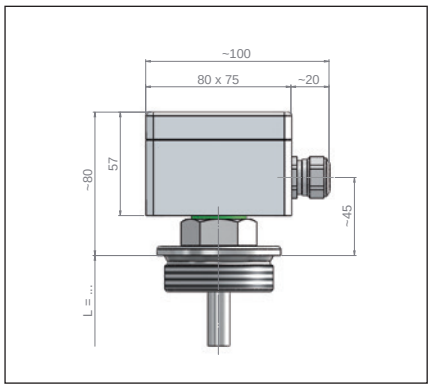

Connection type: ALF
Material quality: Aluminium coated RAL 7001
Cable entry: M20 x 1.5
Ingress protection class: IP 65
Ambient temperature: -40°C ... 100°C

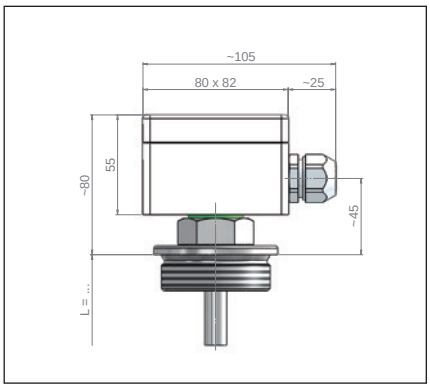

Connection type: ABA
Material quality: ABS
Cable entry: M20 x 1.5
Ingress protection class: IP 65
Ambient temperature: -10°C ... 80°C

Approvals / Certificates

DIBt WHG §19 EAC TÜV SÜD

Further electrical connections page 52 - 54
Further process connection according to type key page 10
Further floats page 48 - 51

The magnetic float level transmitter are based on a modular design and can be arranged individually.
Type key page 10 - 13

Heinrich Kübler AG
Ruessenstrasse 4 | CH-6340 Baar | Phone +41 (0)41 766 62 62 | Fax +41 (0)41 766 62 63 | E-Mail info@kubler.ch | Internet www.kubler.ch

Type	K/PF/E-1-PF/K..-L../16-1/SPFK56/21/R-../SIL	K/PF/E-1-PF/K..-L../20-1/SPFK80/24/V-../SIL
Material quality:	PVDF	PVDF
Electrical connection:	Silicone connection cable	Silicone connection cable
Process connection:	G 1“	G 1“
Guide tube:	Ø 16 mm	Ø 20 mm
Length of instrument:	≤ 3000 mm	≤ 3000 mm
Float:	SPFK56/21/R Ø 56 mm	SPFK80/24/V Ø 80 mm
Specific gravity:	≥ 800 kg/m³	≥ 700 kg/m³
Design pressure:	-1 bar ... 1 bar	-1 bar ... 1 bar
Design temperature:	-10°C ... 100°C	-10°C ... 100°C
Ingress protection class:	IP 55 (optional IP 68)	IP 55 (optional IP 68)
Mounting position:	Vertical +/-30°	Vertical +/-30°
Accuracy		
Type K.. (-30°C ... 130°C) Accuracy:	5 / 10 / 12.7 / 15 mm	5 / 10 / 12.7 / 15 mm
Type K..HTF (-40°C ... 200°C) Accuracy:	-	-
Type K..HT (-40°C ... 250°C) Accuracy:	-	-
Option control unit / Page 55		
Control unit:	- Programmable - Hart-programmable - Profibus PA - Foundation Fieldbus	- Programmable - Hart-programmable - Profibus PA - Foundation Fieldbus
Option temperature probe / Page 56		
Temperature probe:	Pt-100 / Pt-1000	Pt-100 / Pt-1000
Norm:	IEC 751 Kl.B	IEC 751 Kl.B
Option temperature switch / Page 56		
Function:	Normally closed (NC) or normally open (NO)	Normally closed (NC) or normally open (NO)
Switching capacity:	Page 56	Page 56
Accuracy / Hysterese:	Page 56	Page 56
Temperature / Grading:	Page 56	Page 56

Minimum measures

K/PF/E-1-PF/K..-L../16-1/SPFK56/21/R-../SIL
L1: ≥ 65 mm
U: 60 mm

Approvals / Certificates

EAC / PED / WHG

Minimum measures

K/PF/E-1-PF/K..-L../20-1/SPFK80/24/V-../SIL
L1: ≥ 80 mm
U: 65 mm

Approvals / Certificates

EAC / PED / WHG

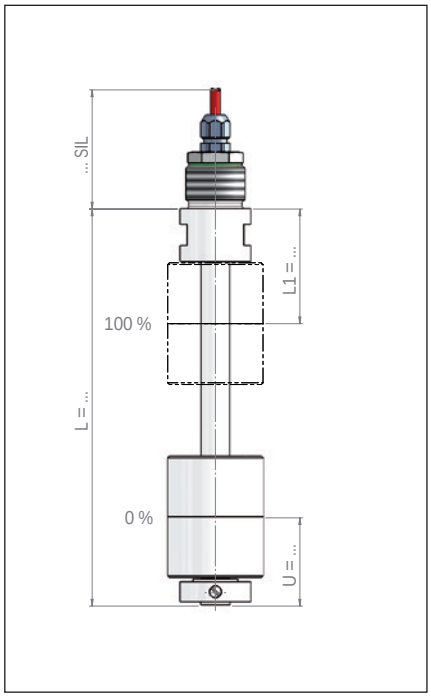

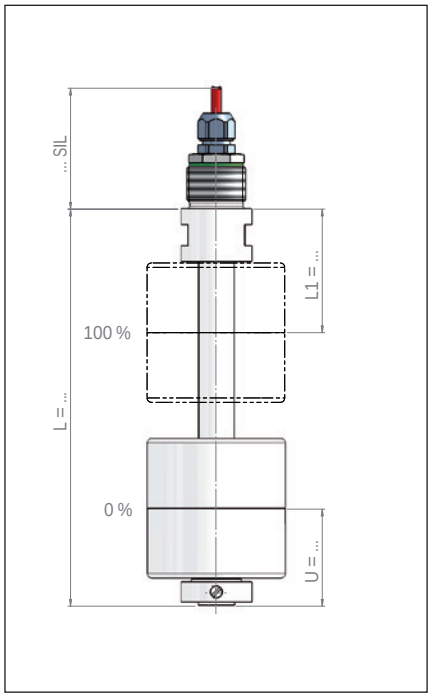

The magnetic float level transmitter are based on a modular design and can be arranged individually.
Type key page 10 - 13

Electrical connection

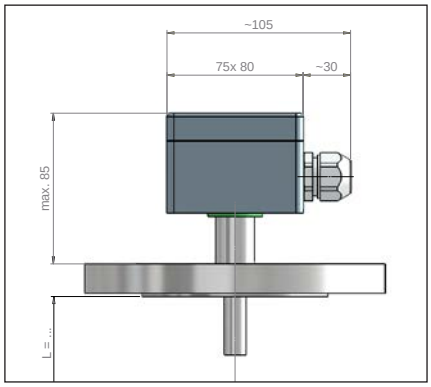

Connection type: APA / APB (Ex)
Material quality: Polyester
Cable entry: M20 x 1.5
Ingress protection class: IP 65
Ambient temperature: -10°C ... 100°C

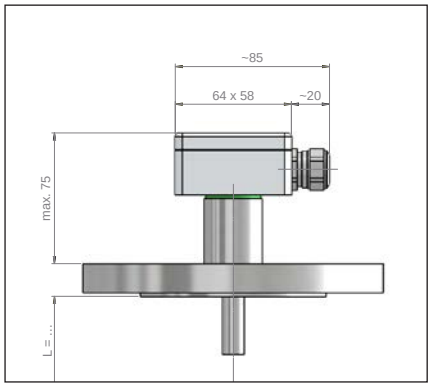

Connection type: ALE
Material quality: Aluminium coated RAL 7001
Cable entry: M20 x 1.5
Ingress protection class: IP 65
Ambient temperature: -40°C ... 100°C

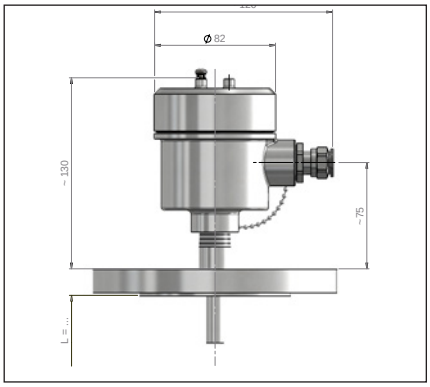

Connection type: AVA / AVDA (Exd)
Material quality: Stainless steel A4 (SS316)
Cable entry: M20 x 1.5
Ingress protection class: IP 67 / (Exd / IP 68)
Ambient temperature: -40°C ... 85°C

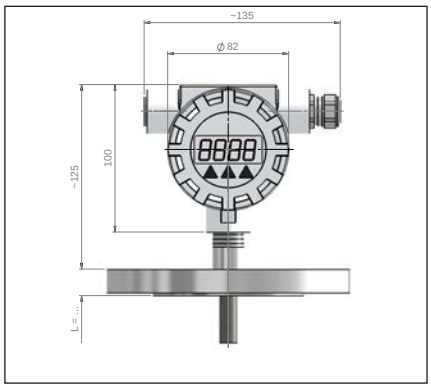

Connection type: DAALA
Material quality: Aluminium
Cable entry: M20 x 1.5
Ingress protection class: IP 65
Ambient temperature: -40°C ... 60°C

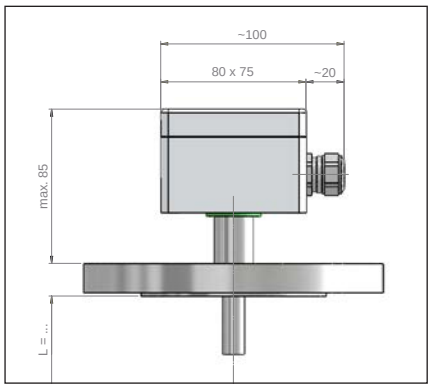

Connection type: ALF
Material quality: Aluminium coated RAL 7001
Cable entry: M20 x 1.5
Ingress protection class: IP 65
Ambient temperature: -40°C ... 100°C

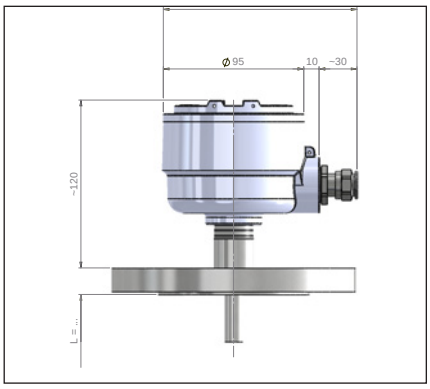

Connection type: ALDA (Exd)
Material quality: Aluminium coated RAL 9006
Cable entry: M20 x 1.5
Ingress protection class: IP 68
Ambient temperature: -40°C ... 100°C

Approvals / Certificates

ATEX*

II 1/2G Ex c ia IIC T6 - T3 Ga/Gb	II 2G Ex c d IIC T6 - T4 Gb		II 2G Ex c d IIC T6 - T4 Gb	
II 1/2G Ex c d ia IIC T6 - T4 Ga/Gb	II 2D Ex c tb IIIC T80°C - T190°C or T125°C Db IP6X		II 2D Ex c tb IIIC T80°C - T95°C or T125°C Db IP6X	
Liquid temperature Exia max. 180°C / Exd max. 120°C				
Type of protection intrinsic safety Ex ia IIC passive multi-pole device	U_i ≤ 30 V	I_i ≤ 150 mA		
Type of protection intrinsic safety Ex ia IIC with built-in separately certified measuring transducer		see appropriate special certificate		
Type of protection intrinsic safety Ex ia IIC switch or temperature switch	I_i ≤ 100 mA			
Type of protection „flameproof enclosure“	U_N ≤ 28 V	I_i ≤ 100 mA	P_i ≤ 700 mW	
Type of protection „flameproof enclosure“ passive multi-pole device	U_N ≤ 30 VDC/AC	I_N ≤ 150 mA		
Type of protection „flameproof enclosure“ temperature sensor / switch	U_N ≤ 100 VDC/AC	I_N ≤ 300 mA	P_{SN} ≤ 1 W	P_{FN} ≤ 700 mW

Further electrical connections page 52 - 54
Further process connection according to type key page 10
Further floats page 48 - 51

The magnetic float level transmitter are based on a modular design and can be arranged individually.
Type key page 10 - 13

* = The approval is dependent on the equipment combination

Heinrich Kübler AG
Ruessenstrasse 4 | CH-6340 Baar | Phone +41 (0)41 766 62 62 | Fax +41 (0)41 766 62 63 | E-Mail info@kubler.ch | Internet www.kubler.ch

Type	ALE/VEEC/FE-50/16/B1-VEEC/K10-L../11-1/SVEECK45/14/V	ALE/VEEC/FE-80/16/B1-VEEC/K..-L../17-1/SVEEC73/23/V
Material quality:	Stainless steel ECTFE coated	Stainless steel ECTFE coated
Electrical connection:	ALE Aluminium terminal box	ALE Aluminium terminal box
Process connection:	Flange EN DN 50 / PN 16 / Form B1	Flange EN DN 80 / PN 16 / Form B1
Guide tube:	Ø 11 mm	Ø 17 mm
Length of instrument:	≤ 3000 mm	≤ 3000 mm
Float:	SVEECK45/14/V Ø 44 mm	SVEEC73/23/V Ø 73 mm
Specific gravity:	≥ 950 kg/m³	≥ 750 kg/m³
Design pressure:	-1 bar ... 16 bar (depending on temperature)	-1 bar ... 16 bar (depending on temperature)
Design temperature:	-40°C ... +150°C	-40°C ... +150°C
Ingress protection class:	IP 65	IP 65
Mounting position:	Vertical +/-30°	Vertical +/-30°
Accuracy		
Type K.. (-30°C ... 130°C) Accuracy:	10 mm	5 / 10 / 12.7 / 15 mm
Type K..HTF (-40°C ... 200°C) Accuracy:	-	5 / 10 / 15 mm
Type K..HT (-40°C ... 250°C) Accuracy:	-	-
Option control unit / Page 55		
Control unit:	- Programmable - Hart-programmable - Profibus PA - Foundation Fieldbus	- Programmable - Hart-programmable - Profibus PA - Foundation Fieldbus
Option temperature probe / Page 56		
Temperature probe:	Pt-100 / Pt-1000	Pt-100 / Pt-1000
Norm:	IEC 751 Kl.B	IEC 751 Kl.B
Option temperature switch / Page 56		
Function:	Normally closed (NC) or normally open (NO)	Normally closed (NC) or normally open (NO)
Switching capacity:	Page 56	Page 56
Accuracy / Hysterese:	Page 56	Page 56
Temperature / Grading:	Page 56	Page 56

Minimum measures

ALE/VEEC/FE-50/16/B1-VEEC/K10-L../11-1/SVEECK45/14/V
L1: ≥ 70 mm
U: 50 mm

Approvals / Certificates

ATEX / EAC / PED / WHG

Minimum measures

ALE/VEEC/FE-80/16/B1-VEEC/K..-L../17-1/SVEEC73/23/V
L1: ≥ 70 mm
U: 70 mm

Approvals / Certificates

ATEX / EAC / PED / WHG

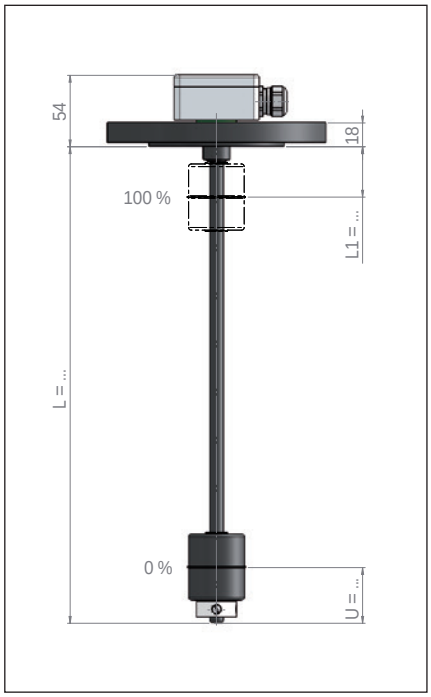

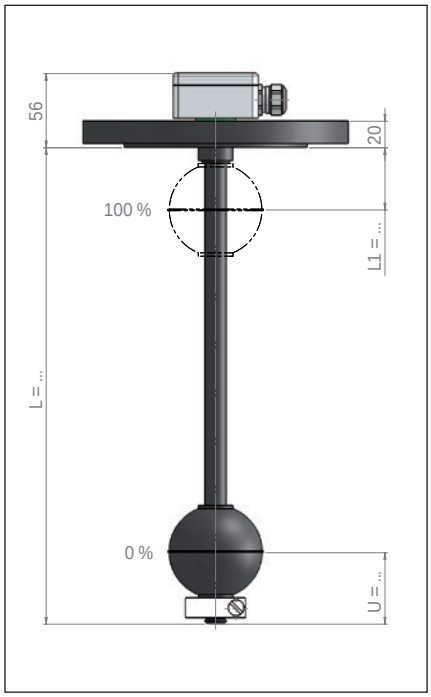

The magnetic float level transmitter are based on a modular design and can be arranged individually.
Type key page 10 - 13

Electrical connection

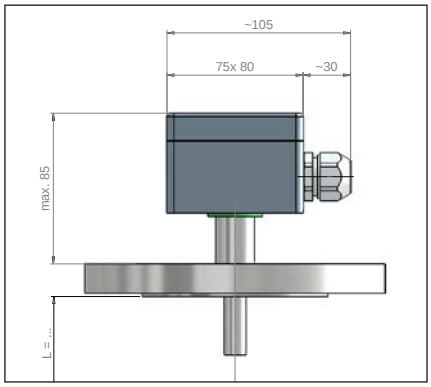

Connection type: APA / APB (Ex)
Material quality: Polyester
Cable entry: M20 x 1.5
Ingress protection class: IP 65
Ambient temperature: -10°C ... 100°C

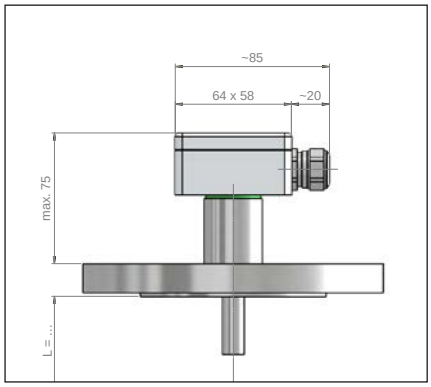

Connection type: ALE
Material quality: Aluminium coated RAL 7001
Cable entry: M20 x 1.5
Ingress protection class: IP 65
Ambient temperature: -40°C ... 100°C

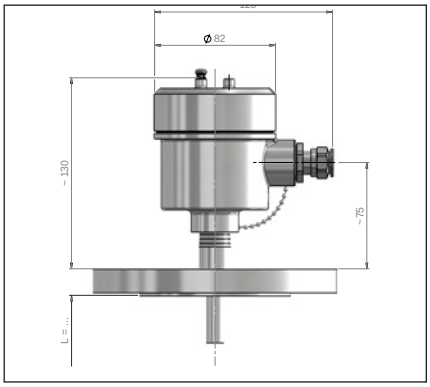

Connection type: AVA / AVDA (Exd)
Material quality: Stainless steel A4 (SS316)
Cable entry: M20 x 1.5
Ingress protection class: IP 67 / (Exd / IP 68)
Ambient temperature: -40°C ... 85°C

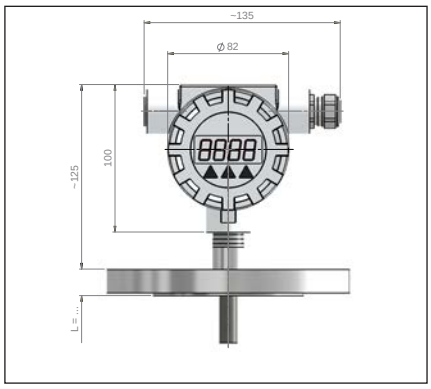

Connection type: DAALA
Material quality: Aluminium
Cable entry: M20 x 1.5
Ingress protection class: IP 65
Ambient temperature: -40°C ... 60°C

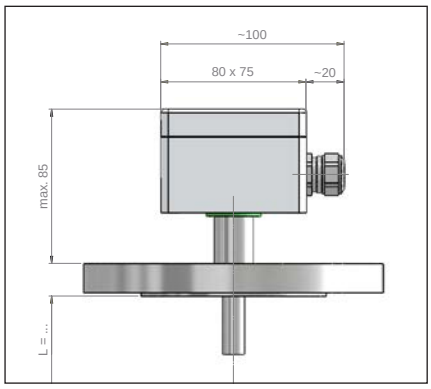

Connection type: ALF
Material quality: Aluminium coated RAL 7001
Cable entry: M20 x 1.5
Ingress protection class: IP 65
Ambient temperature: -40°C ... 100°C

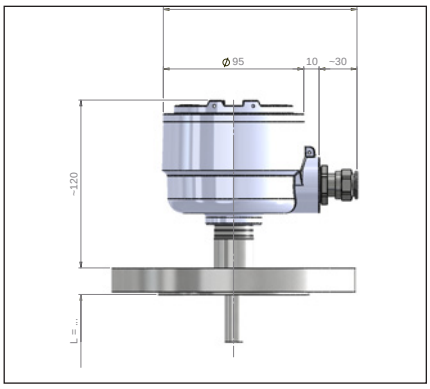

Connection type: ALDA (Exd)
Material quality: Aluminium coated RAL 9006
Cable entry: M20 x 1.5
Ingress protection class: IP 68
Ambient temperature: -40°C ... 100°C

Approvals / Certificates

ATEX*

II 1/2G Ex c ia IIC T6 - T3 Ga/Gb	II 2G Ex c d IIC T6 - T4 Gb		II 2G Ex c d IIC T6 - T4 Gb	
II 1/2G Ex c d ia IIC T6 - T4 Ga/Gb	II 2D Ex c tb IIIC T80°C - T190°C or T125°C Db IP6X		II 2D Ex c tb IIIC T80°C - T95°C or T125°C Db IP6X	
Liquid temperature Exia max. 180°C / Exd max. 120°C				
Type of protection intrinsic safety Ex ia IIC passive multi-pole device	U_i ≤ 30 V	I_i ≤ 150 mA		
Type of protection intrinsic safety Ex ia IIC with built-in separately certified measuring transducer		see appropriate special certificate		
Type of protection intrinsic safety Ex ia IIC switch or temperature switch	I_i ≤ 100 mA			
Type of protection „flameproof enclosure“	U_N ≤ 28 V	I_i ≤ 100 mA	P_i ≤ 700 mW	
Type of protection „flameproof enclosure“ passive multi-pole device	U_N ≤ 30 VDC/AC	I_N ≤ 150 mA		
Type of protection „flameproof enclosure“ temperature sensor / switch	U_N ≤ 100 VDC/AC	I_N ≤ 300 mA	P_{SN} ≤ 1 W	P_{FN} ≤ 700 mW

Further electrical connections page 52 - 54
Further process connection according to type key page 10
Further floats page 48 - 51

The magnetic float level transmitter are based on a modular design and can be arranged individually.
Type key page 10 - 13

* = The approval is dependent on the equipment combination

Heinrich Kübler AG
Ruessenstrasse 4 | CH-6340 Baar | Phone +41 (0)41 766 62 62 | Fax +41 (0)41 766 62 63 | E-Mail info@kubler.ch | Internet www.kubler.ch

Type	ALE/VPFA/FE-50/16/B1-VPFA/K10-L../11-1/SVPFAK45/14/V	ALE/VPFA/FE-80/16/B1-VPFA/K..-L../17-1/SVPFA73/23/V
Material quality:	Stainless steel PFA coated	Stainless steel PFA coated
Electrical connection:	ALE Aluminium terminal box	ALE Aluminium terminal box
Process connection:	Flange EN DN 50 / PN 16 / Form B1	Flange EN DN 80 / PN 16 / Form B1
Guide tube:	Ø 11mm	Ø 17 mm
Length of instrument:	≤ 3000 mm	≤ 3000 mm
Float:	SVPFAK45/14/V Ø 44 mm	SVPFA73/23/V Ø 73 mm
Specific gravity:	≥ 1000 kg/m³	≥ 800 kg/m³
Design pressure:	-1 bar ... 16 bar (depending on temperature)	-1 bar ... 16 bar (depending on temperature)
Design temperature:	See accuracy	See accuracy
Ingress protection class:	IP 65	IP 65
Mounting position:	Vertical +/-30°	Vertical +/-30°
Accuracy		
Type K.. (-30°C ... 130°C) Accuracy:	10 mm	5 / 10 / 12.7 / 15 mm
Type K..HTF (-40°C ... 200°C) Accuracy:	-	5 / 10 / 15 mm
Type K..HT (-40°C ... 250°C) Accuracy:	-	5 / 10 / 15 mm
Option control unit / Page 55		
Control unit:	- Programmable - Hart-programmable - Profibus PA - Foundation Fieldbus	- Programmable - Hart-programmable - Profibus PA - Foundation Fieldbus
Option temperature probe / Page 56		
Temperature probe:	Pt-100 / Pt-1000	Pt-100 / Pt-1000
Norm:	IEC 751 Kl.B	IEC 751 Kl.B
Option temperature switch / Page 56		
Function:	Normally closed (NC) or normally open (NO)	Normally closed (NC) or normally open (NO)
Switching capacity:	Page 56	Page 56
Accuracy / Hysterese:	Page 56	Page 56
Temperature / Grading:	Page 56	Page 56

Minimum measures

ALE/VPFA/FE-50/16/B1-VPFA/K10-L../11-1/SVPFAK45/14/V
L1: ≥ 70 mm
U: 50 mm

Approvals / Certificates

ATEX / EAC / PED

Minimum measures

ALE/VPFA/FE-80/16/B1-VPFA/K..-L../17-1/SVPFA73/23/V
L1: ≥ 70 mm
U: 70 mm

Approvals / Certificates

ATEX / EAC / PED

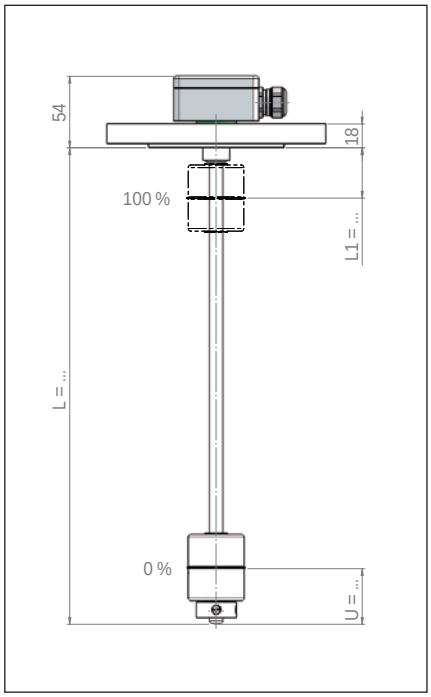

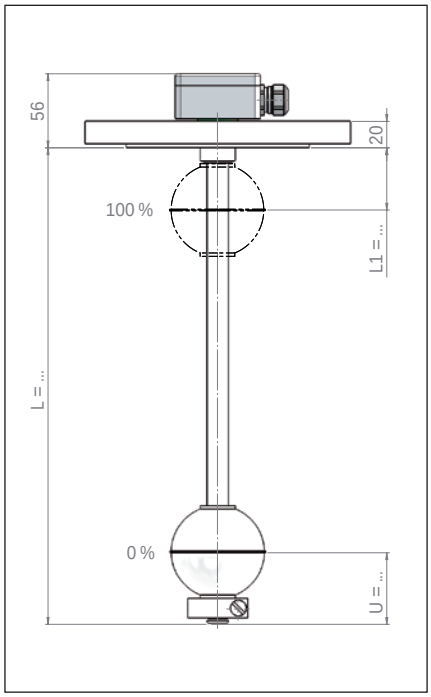

The magnetic float level transmitter are based on a modular design and can be arranged individually.
Type key page 10 - 13

Electrical connection

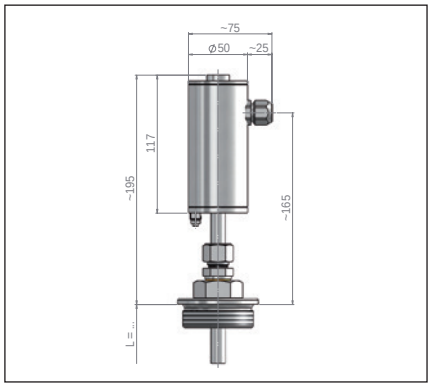

Connection type: AVM
Material quality: Stainless steel A4 (SS316)
Cable entry: M16 x 1.5
Ingress protection class: IP 68
Ambient temperature: -40°C ... 85°C

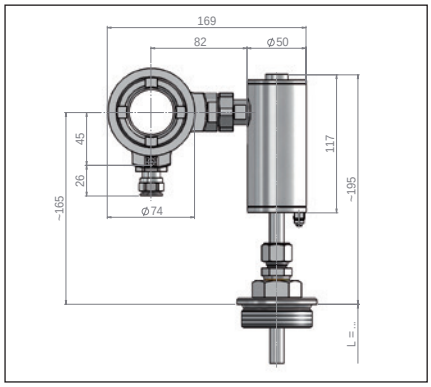

Connection type: AVDM (Exd)
Material quality: Stainless steel A4 (SS316)
Cable entry: M20 x 1.5
Ingress protection class: IP 68
Ambient temperature: -40°C ... 85°C

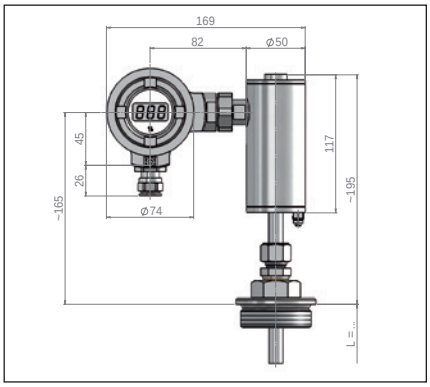

Connection type: DAAVDM (Exd) w. LED display
Material quality: Stainless steel A4 (SS316)
Cable entry: M20 x 1.5
Ingress protection class: IP 68
Ambient temperature: -40°C ... 85°C

Approvals / Certificates

ATEX*

II 1/2G Ex ia IIB/IIC T6 - T1 Ga/Gb	II 2G Ex ia IIB/IIC T6 - T1 Gb II 2G Ex d IIC T4		
Type of protection intrinsic safety Ex ia IIC	U_i ≤ 30 V	I_i ≤ 200 mA	P_i ≤ 1000 mW
Temperature class	T6	T5	T4 - T1
Ambient temperature(T_a)	-40°C ... 40°C	-40°C ... 55°C	-40°C ... 85°C
Liquid temperature(T_F)	-20°C ... 60°C	-20°C ... 60°C	-20°C ... 60°C

Further process connection according to type key page 10
Further floats page 48 - 51

The magnetic float level transmitter are based on a modular design and can be arranged individually.
Type key page 10 - 13

* = The approval is dependent on the equipment combination

Heinrich Kübler AG
Ruessenstrasse 4 | CH-6340 Baar | Phone +41 (0)41 766 62 62 | Fax +41 (0)41 766 62 63 | E-Mail info@kubler.ch | Internet www.kubler.ch

Type	AVM/V/R-2-MST-V/K1-L../12-1/SV52/15/A	AVM/V/TC-..-MST-V/K1-L../16-1/SV3A80/23/A-3A
Material quality:	1.4404 / 1.4435 / 1.4571 (316L / 316Ti)	1.4404 / 1.4435 / 1.4571 (316L / 316Ti)**
Electrical connection:	Stainless steel terminal box	Stainless steel terminal box
Process connection:	G 2“	Try-Clamp
Guide tube:	Ø 12 mm	Ø 16 mm
Length of instrument:	≤ 6000 mm*	≤ 6000 mm*
Float (only with axial magnetic system) ***:	SV52/15/A Ø 52 mm	SV3A80/23/A Ø 80 mm
Specific gravity:	≥ 700 kg/m³	≥ 750 kg/m³
Design pressure:	-1 bar ... 40 bar (depending on temperature)	-1 bar ... 40 bar (depending on temperature)
Design temperature:	See accuracy / ATEX temperature page 42	See accuracy / ATEX temperature page 42
Ingress protection class:	IP 68	IP 68
Mounting position:	Vertical +/-30°	Vertical +/-30°
Accuracy		
Type K1 (-40°C ... 125°C) Accuracy:	0.2 mm	0.2 mm
Type K1HT (-40°C ... 250°C) Accuracy:	0.2 mm	0.2 mm
Control unit		
Type:	MST 4 ... 20 mA MSTB 4 ... 20 mA / Exia MSTH HART®-Protocol MSTHB HART®-Protocol / Exia	MST 4 ... 20 mA MSTB 4 ... 20 mA / Exia MSTH HART®-Protocol MSTHB HART®-Protocol / Exia
Connection:	2-wire	2-wire
Power supply:	10 ... 30 VDC	10 ... 30 VDC
Design temperature:	-40°C ... 85°C / ATEX temperature page 42	-40°C ... 85°C / ATEX temperature page 42
Option temperature switch / Page 56		
Function:	-	-
Switching capacity:	-	-
Accuracy / Hysterese:	-	-
Temperature / Grading:	-	-

Minimum measures

AVM/V/R-2-MST-V/K1-L../12-1/SV52/15/A
L1: ≥ 55 mm
U: 45 mm

Approvals / Certificates

ATEX / EAC / IECEX / PED / SIL2

Minimum measures

AVM/V/TC-..-MST-V/K1-L../16-1/SV3A80/23/A-3A
L1: ≥ 50 mm
U: 55 mm

Approvals / Certificates

3A / ATEX / EAC / IECEX / PED / SIL2

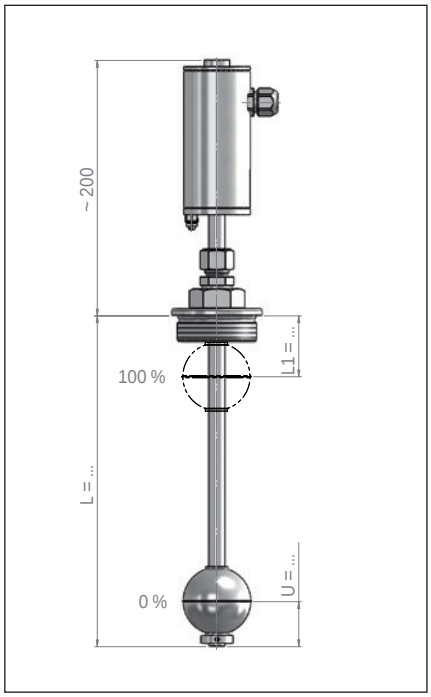

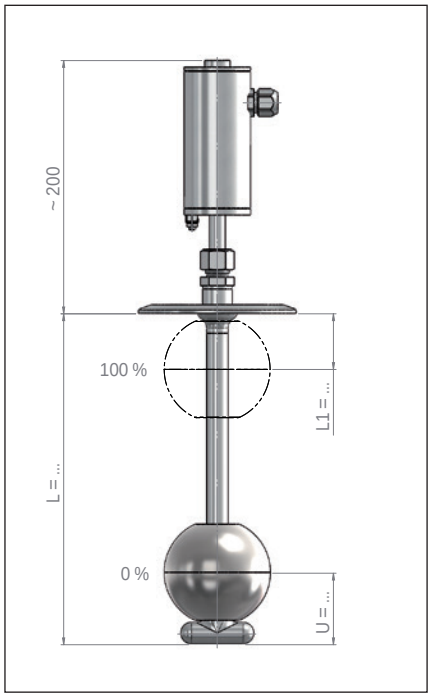

The magnetic float level transmitter are based on a modular design and can be arranged individually.
Type key page 10 - 13

* ATEX-design = guide tube length ≥ 4000 mm by calculation ** = Ra ≤ 0.4µm for all wetted parts *** = see Magnetic Float Switches page 106 - 109

Magnetic Float Level Transmitter / PVC - magnetostrictive

Type	AVM/P/R-2-MST-P/K1-L../16-1/SPK54/22/A	AVM/P/FE-65/10/A-MST-P/K1-L../16-1/SPK54/22/A
Material quality:	PVC	PVC
Electrical connection:	Stainless steel terminal box	Stainless steel terminal box
Process connection:	G 2“	Flange EN DN 65 / PN 10 / Form A
Guide tube:	Ø 16 mm	Ø 16 mm
Length of instrument:	≤ 3000 mm	≤ 3000 mm
Float (only with axial magnetic system) ***:	SPK54/22/A Ø 54 mm	SPK54/22/A Ø 54 mm
Specific gravity:	≥ 750 kg/m³	≥ 750 kg/m³
Design pressure:	-1 bar ... 1 bar	-1 bar ... 1 bar
Design temperature:	-15°C ... 60°C	-15°C ... 60°C
Ingress protection class:	IP 68	IP 68
Mounting position:	Vertical +/-30°	Vertical +/-30°
Accuracy		
Type K1 (-40°C ... 125°C) Accuracy:	0.2 mm	0.2 mm
Type K1HT (-40°C ... 250°C) Accuracy:	-	-
Control unit		
Type:	MST 4 ... 20 mA MSTH HART®-Protocol	MST 4 ... 20 mA MSTH HART®-Protocol
Connection:	2-wire	2-wire
Power supply:	10 ... 30 VDC	10 ... 30 VDC
Design temperature:	-40°C ... 85°C	-40°C ... 85°C
Option temperature switch / Page 56		
Function:	-	-
Switching capacity:	-	-
Accuracy / Hysterese:	-	-
Temperature / Grading:	-	-

Minimum measures

AVM/P/R-2-MST-P/K1-L../16-1/SPK54/22/A
L1: ≥ 65 mm
U: 50 mm

Approvals / Certificates

EAC / PED / SIL2

Minimum measures

AVM/P/FE-65/10/A-MST-P/K1-L../16-1/SPK54/22/A
L1: ≥ 65 mm
U: 50 mm

Approvals / Certificates

EAC / PED / SIL2

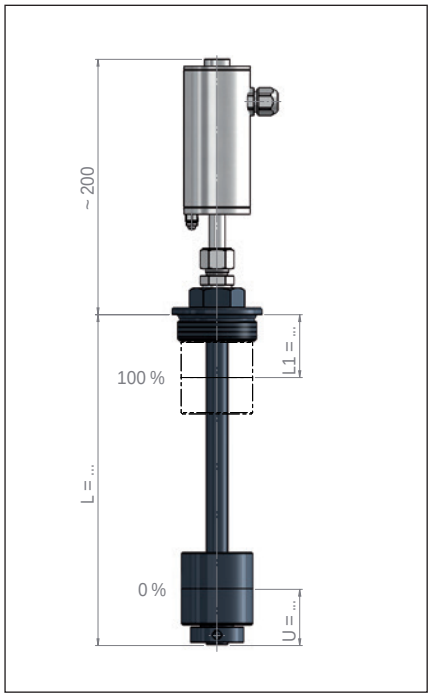

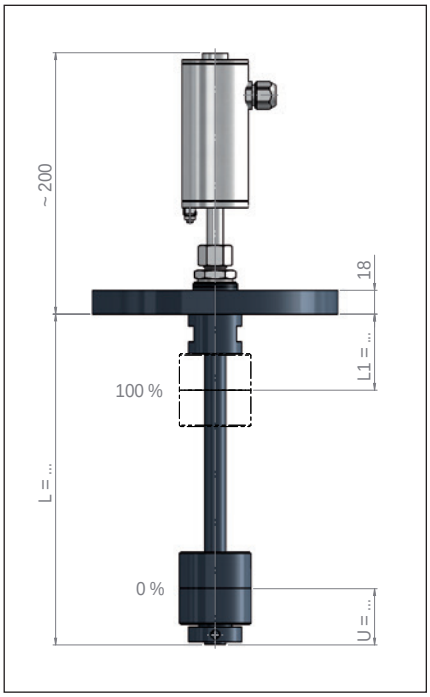

The Magnetic Float Level Transmitter are based on a modular design and can be arranged individually.
Type key page 10 - 13

*** = see Magnetic Float Switches page 106 - 109

Heinrich Kübler AG
Ruessenstrasse 4 | CH-6340 Baar | Phone +41 (0)41 766 62 62 | Fax +41 (0)41 766 62 63 | E-Mail info@kubler.ch | Internet www.kubler.ch

Type	AVM/PP/R-2-MST-PP/K1-L../16-1/SPPK56/21/A	AVM/PP/FE-65/10/A-MST-PP/K1-L../16-1/SPPK56/21/A
Material quality:	Polypropylene	Polypropylene
Electrical connection:	Stainless steel terminal box	Stainless steel terminal box
Process connection:	G 2“	Flange EN DN 65 / PN 10 / Form A
Guide tube:	Ø 16 mm	Ø 16 mm
Length of instrument:	≤ 3000 mm	≤ 3000 mm
Float (only with axial magnetic system) ***:	SPPK56/21/A Ø 56 mm	SPPK56/21/A Ø 56 mm
Specific gravity:	≥ 600 kg/m³	≥ 600 kg/m³
Design pressure:	-1 bar ... 1 bar	-1 bar ... 1 bar
Design temperature:	-10°C ... 80°C	-10°C ... 80°C
Ingress protection class:	IP 68	IP 68
Mounting position:	Vertical +/-30°	Vertical +/-30°
Accuracy		
Type K1 (-40°C ... 125°C) Accuracy:	0.2 mm	0.2 mm
Type K1HT (-40°C ... 250°C) Accuracy:	-	-
Control unit		
Type:	MST 4 ... 20 mA MSTH HART®-Protocol	MST 4 ... 20 mA MSTH HART®-Protocol
Connection:	2-wire	2-wire
Power supply:	10 ... 30 VDC	10 ... 30 VDC
Design temperature:	-40°C ... 85°C	-40°C ... 85°C
Option temperature switch / Page 56		
Function:	-	-
Switching capacity:	-	-
Accuracy / Hysterese:	-	-
Temperature / Grading:	-	-

Minimum measures

AVM/PP/R-2-MST-PP/K1-L../16-1/SPPK56/21/A
L1: ≥ 65 mm
U: 50 mm

Approvals / Certificates

EAC / PED / SIL2

Minimum measures

AVM/PP/FE-65/10/A-MST-PP/K1-L../16-1/SPPK56/21/A
L1: ≥ 65 mm
U: 50 mm

Approvals / Certificates

EAC / PED / SIL2

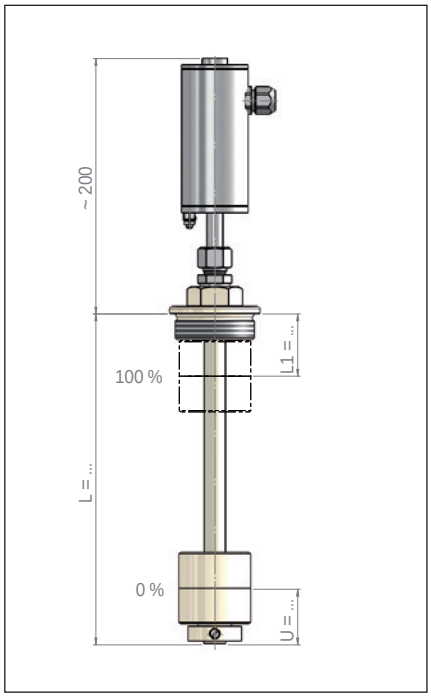

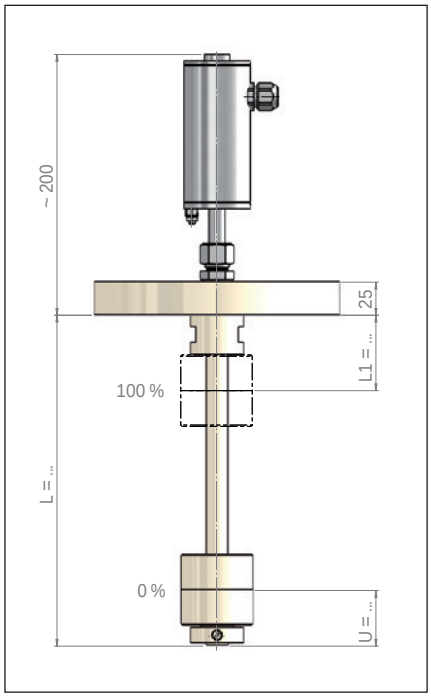

The Magnetic Float Level Transmitter are based on a modular design and can be arranged individually.
Type key page 10 - 13

*** = see Magnetic Float Switches page 106 - 109

Magnetic Float Level Transmitter / PVDF - magnetostrictive

Type	AVM/PF/R-2-MST-PF/K1-L../16-1/SPFK56/21/A	AVM/PF/FE-65/10/A-MST-PF/K1-L../16-1/SPFK56/21/A
Material quality:	PVDF	PVDF
Electrical connection:	Stainless steel terminal box	Stainless steel terminal box
Process connection:	G 2“	Flange EN DN 65 / PN 10 / Form A
Guide tube:	Ø 16 mm	Ø 16 mm
Length of instrument:	≤ 3000 mm	≤ 3000 mm
Float (only with axial magnetic system) ***:	SPFK56/21/A Ø 56 mm	SPFK56/21/A Ø 56 mm
Specific gravity:	≥ 800 kg/m³	≥ 800 kg/m³
Design pressure:	-1 bar ... 1 bar	-1 bar ... 1 bar
Design temperature:	-10°C ... 100°C	-10°C ... 100°C
Ingress protection class:	IP 68	IP 68
Mounting position:	Vertical +/-30°	Vertical +/-30°
Accuracy		
Type K1 (-40°C ... 125°C) Accuracy:	0.2 mm	0.2 mm
Type K1HT (-40°C ... 250°C) Accuracy:	-	-
Control unit		
Type:	MST 4 ... 20 mA MSTH HART®-Protocol	MST 4 ... 20 mA MSTH HART®-Protocol
Connection:	2-wire	2-wire
Power supply:	10 ... 30 VDC	10 ... 30 VDC
Design temperature:	-40°C ... 85°C	-40°C ... 85°C
Option temperature switch / Page 56		
Function:	-	-
Switching capacity:	-	-
Accuracy / Hysterese:	-	-
Temperature / Grading:	-	-

Minimum measures

AVM/PF/R-2-MST-PF/K1-L../16-1/SPFK56/21/A
L1: ≥ 65 mm
U: 50 mm

Approvals / Certificates

EAC / PED / SIL2

Minimum measures

AVM/PF/FE-65/10/A-MST-PF/K1-L../16-1/SPFK56/21/A
L1: ≥ 65 mm
U: 50 mm

Approvals / Certificates

EAC / PED / SIL2

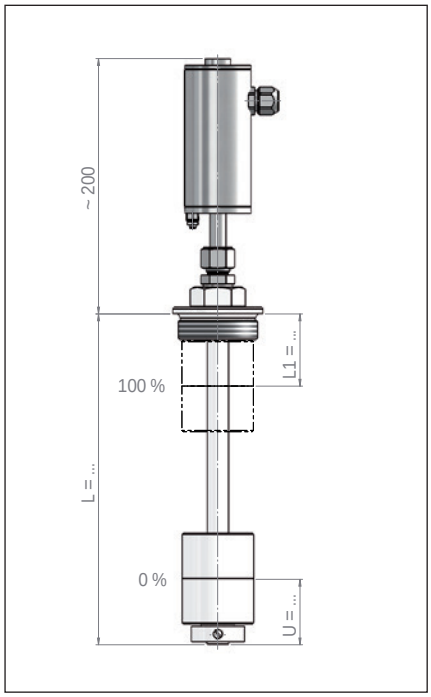

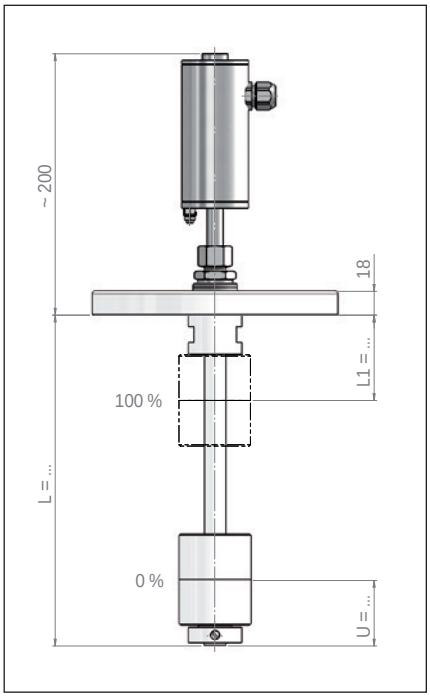

The Magnetic Float Level Transmitter are based on a modular design and can be arranged individually.
Type key page 10 - 13

*** = see Magnetic Float Switches page 106 - 109

Heinrich Kübler AG
Ruessenstrasse 4 | CH-6340 Baar | Phone +41 (0)41 766 62 62 | Fax +41 (0)41 766 62 63 | E-Mail info@kubler.ch | Internet www.kubler.ch

Type	AVM/VEEC/FE-80/16/B1-MST-VEEC/K1-L../17-1/SVEEC73/23/A	AVM/VPFA/FE-80/16/B1-MST-VPFA/K1-L../17-1/SVPFA73/23/A
Material quality:	Stainless steel ECTFE coated	Stainless steel PFA coated
Electrical connection:	Stainless steel terminal box	Stainless steel terminal box
Process connection:	Flange EN DN 80 / PN 16 / Form B1	Flange EN DN 80 / PN 16 / Form B1
Guide tube:	Ø 17 mm	Ø 17 mm
Length of instrument:	≤ 3000 mm	≤ 3000 mm
Float (only with axial magnetic system) ***:	SVEEC73/23/A Ø 73 mm	SVPFA73/23/A Ø 73 mm
Specific gravity:	≥ 750 kg/m³	≥ 800 kg/m³
Design pressure:	-1 bar ... 16 bar (depending on temperature)	-1 bar ... 16 bar (depending on temperature)
Design temperature:	-40°C ... 150°C / ATEX temperature page 42	See accuracy / ATEX temperature page 42
Ingress protection class:	IP 68	IP 68
Mounting position:	Vertical +/-30°	Vertical +/-30°
Accuracy		
Type K1 (-40°C ... 125°C) Accuracy:	0.2 mm	0.2 mm
Type K1HT (-40°C ... 250°C) Accuracy:	0.2 mm	0.2 mm
Control unit		
Type:	MST 4 ... 20 mA MSTB 4 ... 20 mA / Exia MSTH HART®-Protocol MSTHB HART®-Protocol / Exia	MST 4 ... 20 mA MSTB 4 ... 20 mA / Exia MSTH HART®-Protocol MSTHB HART®-Protocol / Exia
Connection:	2-wire	2-wire
Power supply:	10 ... 30 VDC	10 ... 30 VDC
Design temperature:	-40°C ... 85°C / ATEX temperature page 42	-40°C ... 85°C / ATEX temperature page 42
Option temperature switch / Page 56		
Function:	-	-
Switching capacity:	-	-
Accuracy / Hysterese:	-	-
Temperature / Grading:	-	-

Minimum measures

AVM/VEEC/FE-80/16/B1-MST-VEEC/K1-L../17-1/SVEEC73/23/A
L1: ≥ 70 mm
U: 70 mm

Approvals / Certificates

ATEX / EAC / PED / SIL2

Minimum measures

AVM/VPFA/FE-80/16/B1-MST-VPFA/K1-L../17-1/SVPFA73/23/A
L1: ≥ 70 mm
U: 70 mm

Approvals / Certificates

ATEX / EAC / PED / SIL2

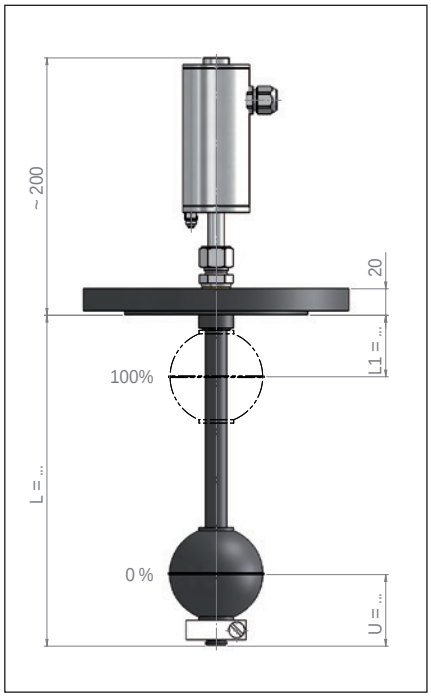

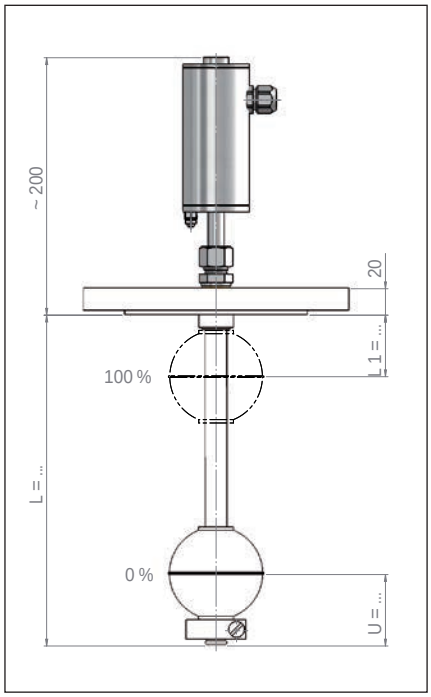

The Magnetic Float Level Transmitter are based on a modular design and can be arranged individually.
Type key page 10 - 13

*** = see Magnetic Float Switches page 106 - 109

Magnetic Float Level Transmitter / Ball float

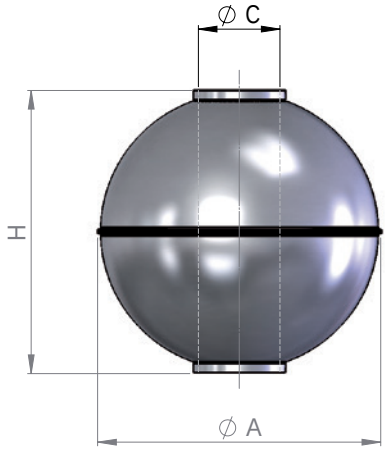

Type	Material quality	ø A	H	ø C	Min. Specific gravity	Min. / Max. Design pressure	Min. / Max. Design temperature	Min. L1	Min. U	Min. Float distance	Weight
		mm	mm	mm	kg/m³	bar	°C	mm	mm	mm	g
SV52/15/V	Stainless steel	52	52	15	700	-1 ... 40*	-156 ... 250	55	45	70	37
SV62/15/V	Stainless steel	62	62	15	600	-1 ... 25*	-156 ... 250	60	50	80	58
SV72/15/V	Stainless steel	72	71,5	15	530	-1 ... 25*	-156 ... 250	65	50	90	83
SV83/15/V	Stainless steel	83	82	15	400	-1 ... 25*	-156 ... 250	70	55	100	88
SV72/24/V	Stainless steel	72	70	24	620	-1 ... 25*	-156 ... 250	60	60	90	86
SV80/23/V	Stainless steel	80	75	23	620	-1 ... 25*	-156 ... 250	70	60	95	105
SV3A80/23/V	Stainless steel	80	73	23	750	-1 ... 40*	-156 ... 250	50	55	100	145
SV98/23/V	Stainless steel	98	96	23	570	-1 ... 25*	-156 ... 250	80	70	115	210
SV205/56/R	Stainless steel	205	198	56	400	-1 ... 6	-156 ... 200	110	140	250	1260
SV300/56/R	Stainless steel	300	110	56	500	-1 ... 3	-156 ... 200	70	90	160	1700
STIS44/12/V	Titanium	44	44	12	780	-1 ... 100*	-10 ... 250	50	40	60	25
STI52/14/V	Titanium	52	52	14	600	-1 ... 25	-10 ... 150	55	45	70	32
STIS52/15/V	Titanium	52	52	15	780	-1 ... 150*	-10 ... 250	55	45	70	42
STI62/14/V	Titanium	62	62	14	450	-1 ... 25	-10 ... 150	60	50	80	41
STI82/14/V	Titanium	82	80	14	500	-1 ... 16	-10 ... 150	70	55	100	108
SHC62/15/V	Alloy C	62	62	15	700	-1 ... 25*	-196 ... 250	60	50	80	65
SHC82/15/V	Alloy C	82	81	15	500	-1 ... 16*	-196 ... 250	70	55	100	95
SHC72/24/V	Alloy C	72	70	24	830	-1 ... 25*	-196 ... 250	60	60	90	116
SHC80/23/V	Alloy C	80	75	23	730	-1 ... 18*	-196 ... 250	70	60	95	125
SHC98/23/V	Alloy C	98	96	23	550	-1 ... 16*	-196 ... 250	80	70	115	208
SVEECA53/14/V	ECTFE coated	53	53	14	850	-1 ... 30	-78 ... 150	70	70	80	46
SVEECB53/14/V**	ECTFE coated	53	53	14	850	-1 ... 30	-78 ... 150	70	70	80	46
SVEECA73/23/V	ECTFE coated	73	71	23	750	-1 ... 25	-78 ... 150	70	70	105	105
SVEECB73/23/V**	ECTFE coated	73	71	23	750	-1 ... 25	-78 ... 150	70	70	105	105
SVEECA81/22/V	ECTFE coated	81	76	22	700	-1 ... 25	-78 ... 150	75	75	110	127
SVEECB81/22/V**	ECTFE coated	81	76	22	700	-1 ... 25	-78 ... 150	75	75	110	127
SVPFAA53/14/V	PFA coated	53	53	14	900	-1 ... 30*	-100 ... 250	70	70	80	49
SVPFAB53/14/V**	PFA coated	53	53	14	900	-1 ... 30*	-100 ... 250	70	70	80	49
SVPFAA73/23/V	PFA coated	73	71	23	800	-1 ... 25*	-100 ... 250	70	70	105	110
SVPFAB73/23/V**	PFA coated	73	71	23	800	-1 ... 25*	-100 ... 250	70	70	105	110
SVPFAA81/22/V	PFA coated	81	76	22	750	-1 ... 25*	-100 ... 250	75	75	110	132
SVPFAB81/22/V**	PFA coated	81	76	22	750	-1 ... 25*	-100 ... 250	75	75	110	132

The magnetic float level transmitter are based on a modular design and can be arranged individually.
Type key page 10 - 13

* = Design temperature 200°C, higher temperatures after calculating / ** = acc. to Atex (conductive)

Heinrich Kübler AG
Ruessenstrasse 4 | CH-6340 Baar | Phone +41 (0)41 766 62 62 | Fax +41 (0)41 766 62 63 | E-Mail info@kubler.ch | Internet www.kubler.ch

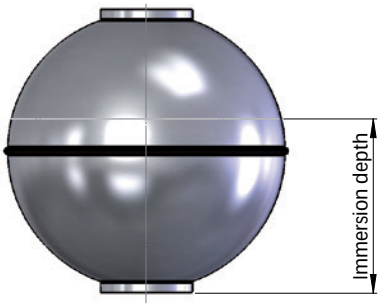

Type	Specific gravity kg/m³											
	400	500	600	700	800	900	1000	1100	1200	1300	1400	1500
	Immersion depth in mm											
SV52/15/V				41,3	35,8	32,4	29,9	28,0	26,4	25,1	23,9	23,0
SV62/15/V			50,6	42,7	38,2	35,0	32,6	30,5	28,9	27,5	26,3	25,2
SV72/15/V			51,1	44,8	40,5	37,3	34,8	32,8	31,0	29,6	28,3	27,2
SV83/15/V	61,3	50,2	44,1	39,7	36,5	33,9	31,8	30,1	28,6	27,3	26,2	25,2
SV72/24/V				50,6	45,2	41,4	38,6	36,2	34,3	32,7	31,3	30,1
SV80/23/V				52,1	46,8	43,0	40,0	37,6	35,7	34,0	32,5	31,2
SV3A80/23/V					54,5	49,7	46,0	43,1	40,7	38,7	37,0	35,5
SV98/23/V			71,4	62,3	56,3	51,8	48,3	45,4	43,0	41,0	39,2	37,7
SV205/56/R	149,5	123,8	108,8	98,4	90,6	84,5	79,4	75,3	71,7	68,6	65,9	63,5
SV300/56/R		70,0	60,0	55,0	50,0	45,0	43,0	40,0	38,0	37,0	36,0	35,0
STIS44/12/V					34,0	30,0	27,5	25,6	24,0	22,7	21,7	20,7
STI52/14/V			40,8	34,9	31,3	28,7	26,7	25,1	23,8	22,6	21,7	20,8
STIS52/15/V					40,9	36,1	33,0	30,6	28,8	27,2	25,9	24,8
STI62/14/V		41,9	36,2	32,5	29,7	27,6	25,9	24,5	23,2	22,2	21,3	20,5
STI82/14/V		59,7	51,0	45,5	41,5	38,4	35,9	33,9	32,1	30,6	29,3	28,2
SHC62/15/V				43,0	42,0	38,1	36,2	33,0	31,1	29,5	28,2	27,0
SHC82/15/V		53,5	46,5	41,8	38,3	35,6	33,3	31,5	29,9	28,6	27,4	26,3
SHC72/24/V						53,0	48,1	44,5	41,8	39,5	37,6	36,0
SHC80/23/V					54,0	48,9	45,1	42,2	39,8	37,8	36,1	34,6
SHC98/23/V			70,7	61,8	55,9	51,5	48,0	45,2	42,8	40,7	39,0	37,4
SVEECA53/14/V						37,1	33,9	31,4	29,5	27,9	26,6	25,4
SVEECB53/14/V**						37,1	33,9	31,4	29,5	27,9	26,6	25,4
SVEECA73/23/V					51,5	46,5	43,0	40,2	37,9	36,0	34,4	33,0
SVEECB73/23/V**					51,5	46,5	43,0	40,2	37,9	36,0	34,4	33,0
SVEECA81/22/V				60,3	52,8	48,0	44,4	41,6	39,3	37,3	35,6	34,2
SVEECB81/22/V**				60,3	52,8	48,0	44,4	41,6	39,3	37,3	35,6	34,2
SVPFAA53/14/V						39,6	35,7	33,0	30,9	29,2	27,7	26,5
SVPFAB53/14/V**						39,6	35,7	33,0	30,9	29,2	27,7	26,5
SVPFAA73/23/V					53,8	48,3	44,5	41,5	39,1	37,1	35,4	33,9
SVPFAB73/23/V**					53,8	48,3	44,5	41,5	39,1	37,1	35,4	33,9
SVPFAA81/22/V					54,7	49,5	45,7	42,7	40,3	38,3	36,5	35,0
SVPFAB81/22/V**					54,7	49,5	45,7	42,7	40,3	38,3	36,5	35,0

The magnetic float level transmitter are based on a modular design and can be arranged individually.
Type key page 10 - 13

* = Design temperature 200°C, higher temperatures after calculating / ** = acc. to Atex (conductive)

Magnetic Float Level Transmitter / Cylindrical float

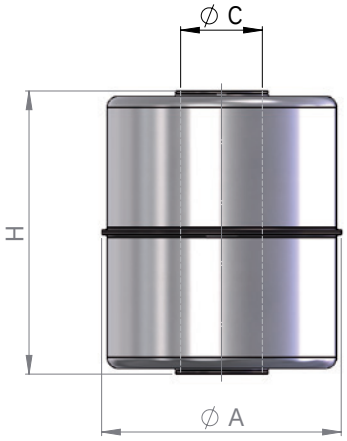

Type	Material quality	ø A	H	ø C	Min. Specific gravity	Min. / Max. Design pressure	Min. / Max. Design temperature	Min. L1	Min. U	Min. Float distance	Weight
		mm	mm	mm	kg/m³	bar	°C	mm	mm	mm	g
SVK44/15/V	Stainless steel	44	52	15	800	-1 ... 25*	-156 ... 250	50	45	70	42
STIK44/14/V	Titanium	44	52	14	750	-1 ... 15	-10 ... 150	50	45	70	35
SHCK44/15/V	Alloy C	44	52	15	1000	-1 ... 6	-196 … 250	50	45	70	52
SB30/13/R	NBR	30	45	13	700	-1 ... 6	-20 ... 80	20	65	60	16
SB40/14/R	NBR	40	120	14	420	-1 ... 6	-20 ... 80	25	140	150	45
SB40/15/R	NBR	40	30	15	700	-1 ... 6	-20 ... 80	25	50	45	17
SB50/20/R	NBR	50	45	20	1000	-1 ... 6	-20 ... 80	30	70	60	65
SPK42/14/R	PVC	42	44	14	800	-1 ... 1	-15 ... 60	50	40	65	32
SPK54/22/R	PVC	54	55	22	750	-1 ... 1	-15 ... 60	65	50	75	64
SPK78/25/R	PVC	78	80	25	600	-1 ... 1	-15 ... 60	80	65	100	164
SPPK44/13/R	PP	44	43	13	700	-1 ... 1	-10 ... 80	50	40	65	25
SPPK44/21/V	PP	44	69	21	800	-1 ... 1	-10 ... 80	50	55	90	45
SPPK56/21/R	PP	56	54	21	600	-1 ... 1	-10 ... 80	65	50	75	50
SPPK80/24/R	PP	80	79	24	500	-1 ... 1	-10 ... 80	80	65	100	126
SPFK44/13/R	PVDF	44	55	13	850	-1 ... 1	-10 … 100	50	55	70	46
SPFK56/21/R	PVDF	56	69	21	800	-1 ... 1	-10 … 100	65	60	90	90
SPFK80/24/V	PVDF	80	79	24	700	-1 ... 1	-10 … 100	80	65	100	192
SVEECKA45/14/V	ECTFE coated	45	53	14	950	-1 ... 25	-78 ... 150	70	70	80	53
SVEECKB45/14/V**	ECTFE coated	45	53	14	950	-1 ... 25	-78 ... 150	70	70	80	53
SVPFAKA45/14/V	PFA coated	45	53	14	1000	-1 ... 25*	-100 ... 250	70	70	80	56
SVPFAKB45/14/V**	PFA coated	45	53	14	1000	-1 ... 25*	-100 ... 250	70	70	80	56

The magnetic float level transmitter are based on a modular design and can be arranged individually.
Type key page 10 - 13

* = Design temperature 200°C, higher temperatures after calculating / ** = acc. to Atex (conductive)

Heinrich Kübler AG
Ruessenstrasse 4 | CH-6340 Baar | Phone +41 (0)41 766 62 62 | Fax +41 (0)41 766 62 63 | E-Mail info@kubler.ch | Internet www.kubler.ch

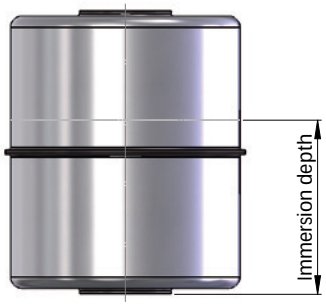

Type	Specific gravity kg/m³											
	400	500	600	700	800	900	1000	1100	1200	1300	1400	1500
	Immersion depth in mm											
SVK44/15/V					43,4	38,6	34,7	31,6	29,0	26,7	24,8	23,2
STIK44/14/V					35,5	31,6	28,4	25,8	23,7	21,9	20,3	18,9
SHCK44/15/V							43,0	39,1	35,9	33,1	30,7	28,7
SB30/13/R				39,8	34,8	31,0	27,9	25,3	23,2	21,4	19,9	18,6
SB40/14/R	103,0	86,7	72,2	61,9	54,2	48,1	43,3	39,4	36,1	33,3	31,0	28,9
SB40/15/R				22,5	19,7	17,5	15,7	14,3	13,1	12,1	11,1	10,5
SB50/20/R							39,4	35,8	32,8	30,3	28,1	26,3
SPK42/14/R					32,5	28,9	26,0	23,6	21,7	20,0	18,6	17,3
SPK54/22/R					41,9	37,2	33,5	30,5	27,9	25,8	23,9	22,3
SPK78/25/R			63,8	54,6	47,8	42,5	38,3	34,8	31,9	29,4	27,3	25,5
SPPK44/13/R				29,0	25,4	22,6	20,3	18,5	16,9	15,6	14,5	13,5
SPPK44/21/V					56,0	49,7	44,8	40,7	37,3	34,4	32,0	29,8
SPPK56/21/R			43,6	37,4	32,7	29,1	26,2	23,8	21,8	20,1	18,7	17,5
SPPK80/24/R		58,8	49,0	42,0	36,7	32,7	29,4	26,7	24,5	22,6	21,0	19,6
SPFK44/13/R						41,5	37,4	34,0	31,1	28,7	26,7	24,9
SPFK56/21/R					58,9	52,4	47,1	42,8	39,3	36,2	33,7	31,4
SPFK80/24/V				64,0	56,0	49,8	44,8	40,7	37,3	34,4	32,0	29,9
SVEECKA45/14/V							40,8	37,1	34,0	31,4	29,2	27,2
SVEECKB45/14/V**							40,8	37,1	34,0	31,4	29,2	27,2
SVPFAKA45/14/V							43,1	39,2	35,9	33,2	30,8	28,8
SVPFAKB45/14/V**							43,1	39,2	35,9	33,2	30,8	28,8

The magnetic float level transmitter are based on a modular design and can be arranged individually.
Type key page 10 - 13

* = Design temperature 200°C, higher temperatures after calculating / ** = acc. to Atex (conductive)

Electrical connection

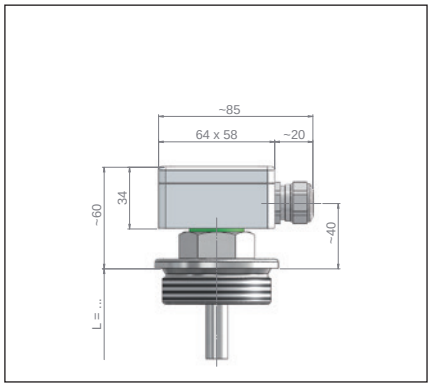

Connection type: ALE
Material quality: Aluminium coated RAL 7001
Cable entry: M20 x 1.5
Ingress protection class: IP 65
Ambient temperature: -40°C ... 100°C

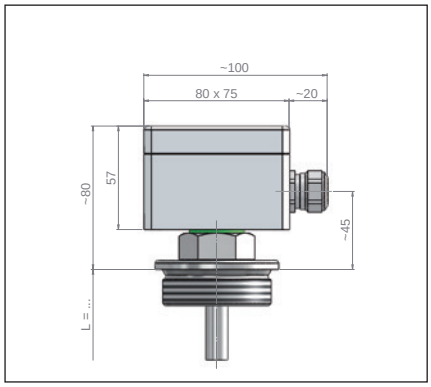

Connection type: ALF
Material quality: Aluminium coated RAL 7001
Cable entry: M20 x 1.5
Ingress protection class: IP 65
Ambient temperature: -40°C ... 100°C

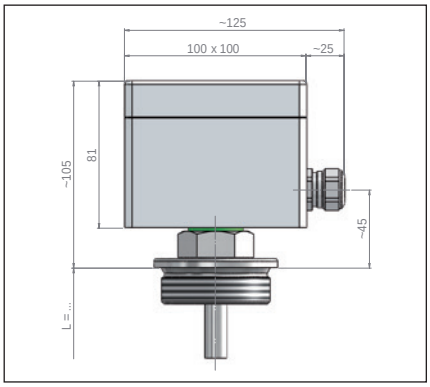

Connection type: ALG
Material quality: Aluminium coated RAL 7001
Cable entry: M20 x 1.5
Ingress protection class: IP 65
Ambient temperature: -40°C ... 100°C

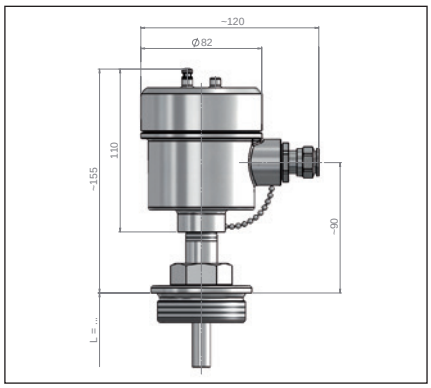

Connection type: AVA / AVDA (Exd)
Material quality: Stainless steel A4 (SS316)
Cable entry: M20 x 1.5
Ingress protection class: IP 67 / (Exd / IP 68)
Ambient temperature: -40°C ... 85°C

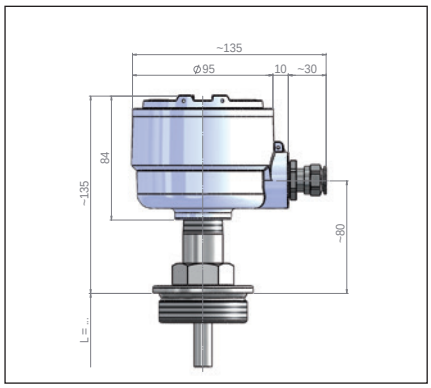

Connection type: ALDA (Exd)
Material quality: Aluminium coated RAL 9006
Cable entry: M20 x 1.5
Ingress protection class: IP 68
Ambient temperature: -40°C ... 100°C

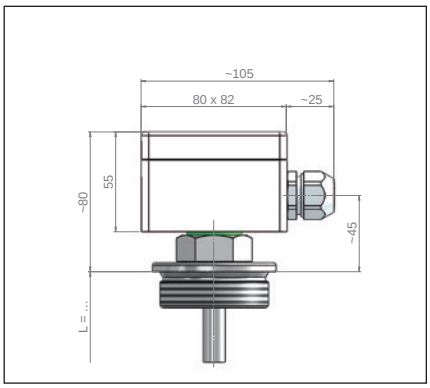

Connection type: ABA
Material quality: ABS
Cable entry: M20 x 1.5
Ingress protection class: IP 65
Ambient temperature: -10°C ... 80°C

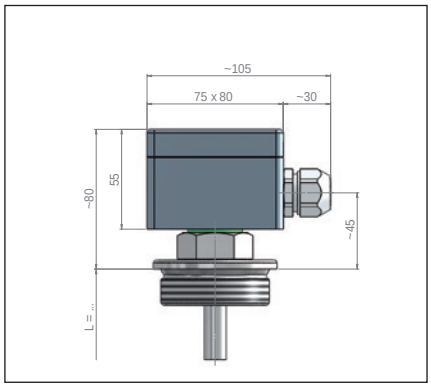

Connection type: APA / APB (Ex)
Material quality: Polyester
Cable entry: M20 x 1.5
Ingress protection class: IP 65
Ambient temperature: -10°C ... 100°C

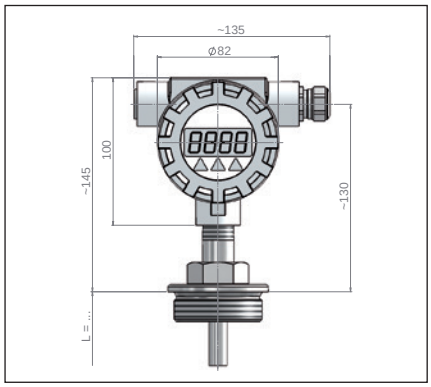

Connection type: DAALA
Material quality: Aluminium
Cable entry: M20 x 1.5
Ingress protection class: IP 65
Ambient temperature: -40°C ... 60°C
Display: 4-digit 7-segment LED display in red
Display range: Free scaling
Current input: 4 ... 20 mA

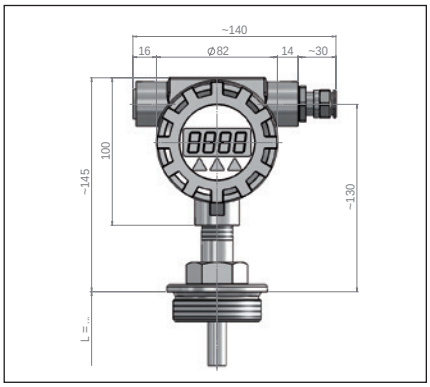

Connection type: DAAVDA
Material quality: Stainless steel electropolished
Cable entry: M20 x 1.5
Ingress protection class: IP 68
Ambient temperature: -40°C ... 60°C
Display: 4-digit 7-segment LED display in red
Display range: Free scaling
Current input: 4 ... 20 mA

The magnetic float level transmitter are based on a modular design and can be arranged individually.
Type key page 10 - 13

Heinrich Kübler AG
Ruessenstrasse 4 | CH-6340 Baar | Phone +41 (0)41 766 62 62 | Fax +41 (0)41 766 62 63 | E-Mail info@kubler.ch | Internet www.kubler.ch

Electrical connection

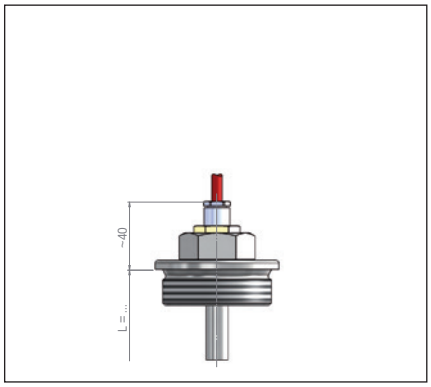

Connection type: K
Material quality: According as cable type
Cable entry: PG or metric
Ingress protection class: IP 55 (optional IP 68)
Ambient temperature: -40°C ... 200°C

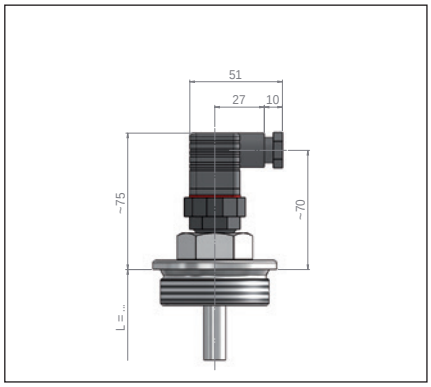

Connection type: ASH
Material quality: PA
Cable entry: M16
Ingress protection class: IP 65
Ambient temperature: -40°C ... 125°C

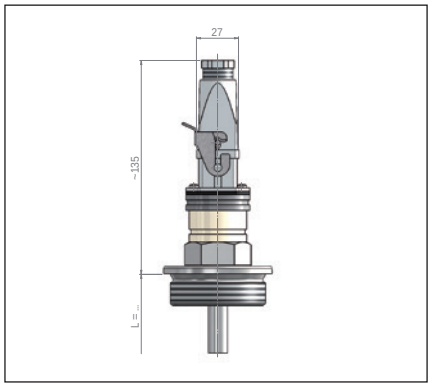

Connection type: ASHAA / ASHBA (Aluminium)
Material quality: Plastic / Aluminium
Cable entry: M20
Ingress protection class: IP 65
Ambient temperature: -10°C ... 80°C

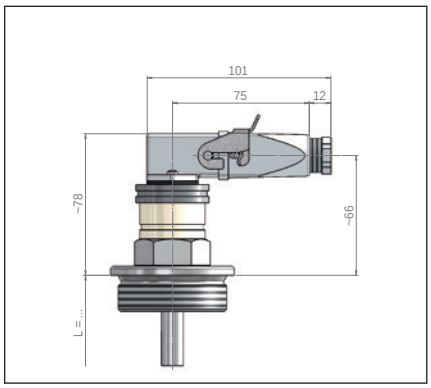

Connection type: ASHAB / ASHBB (Aluminium)
Material quality: Plastic / Aluminium
Cable entry: M20
Ingress protection class: IP 65
Ambient temperature: -10°C ... 80°C

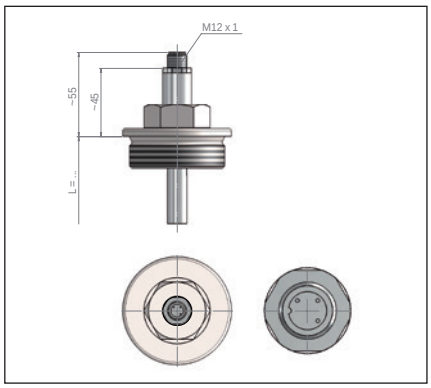

Connection type: ASMA
Material quality: Brass / PA
Connector: M12
Ingress protection class: IP 67
Ambient temperature: -25°C ... 90°C

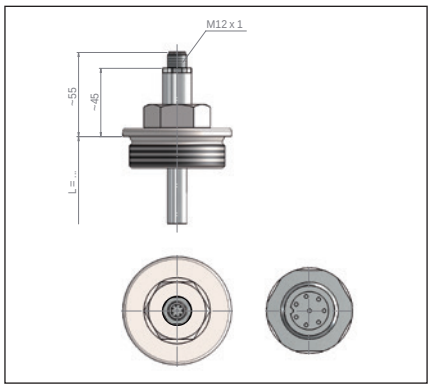

Connection type: ASMB
Material quality: Brass / PA
Connector: M12
Ingress protection class: IP 67
Ambient temperature: -25°C ... 90°C

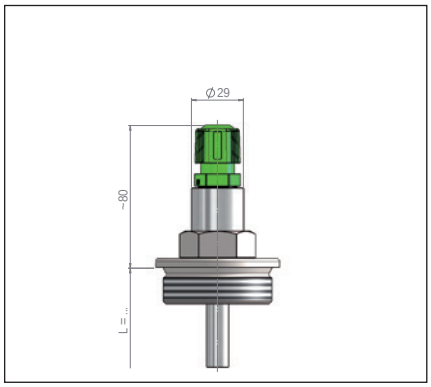

Connection type: ASQ
Material quality: PA
Cable entry: PG11
Ingress protection class:IP 67
Ambient temperature: -25°C ... 85°C

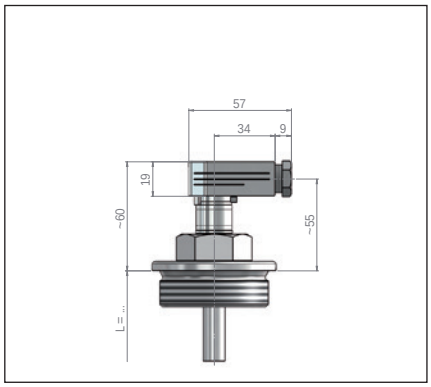

Connection type: ASC
Material quality: Zinc cast
Cable entry: PG9
Ingress protection class: IP 65
Ambient temperature: -10°C ... 125°C

The magnetic float level transmitter are based on a modular design and can be arranged individually.
Type key page 10 - 13

Electrical connection (only magnetostrictive)

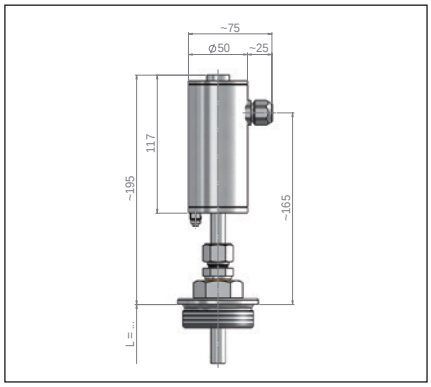

Connection type: AVM
Material quality: Stainless steel A4 (SS316)
Cable entry: M16 x 1.5
Ingress protection class: IP 68
Ambient temperature: -40°C ... 85°C

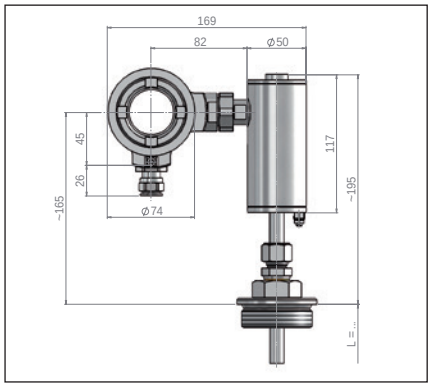

Connection type: AVDM (Exd)
Material quality: Stainless steel A4 (SS316)
Cable entry: M20 x 1.5
Ingress protection class: IP 68
Ambient temperature: -40°C ... 85°C

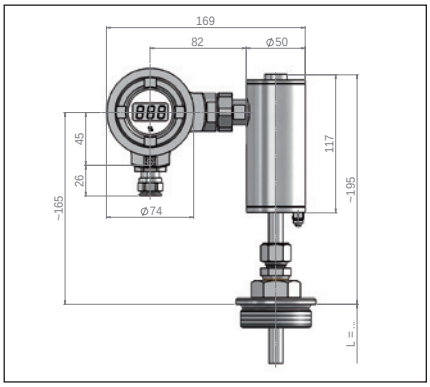

Connection type: DAAVDM (Exd) w. LED display
Material quality: Stainless steel A4 (SS316)
Cable entry: M20 x 1.5
Ingress protection class: IP 68
Ambient temperature: -40°C ... 85°C

The magnetic float level transmitter are based on a modular design and can be arranged individually.
Type key page 10 - 13

Heinrich Kübler AG
Ruessenstrasse 4 | CH-6340 Baar | Phone +41 (0)41 766 62 62 | Fax +41 (0)41 766 62 63 | E-Mail info@kubler.ch | Internet www.kubler.ch

Connection diagram

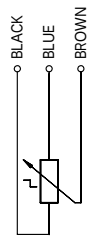

without Control unit

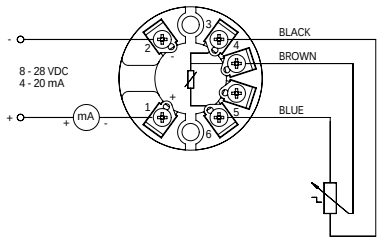

Control unit TP5343..

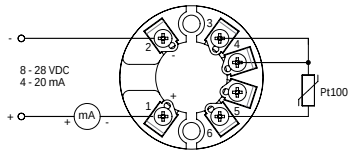

Control unit TD5333..

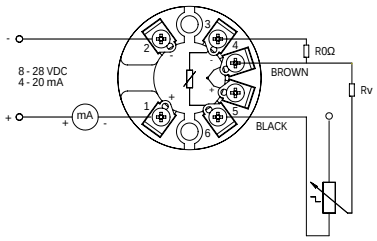

Control unit TD5335..

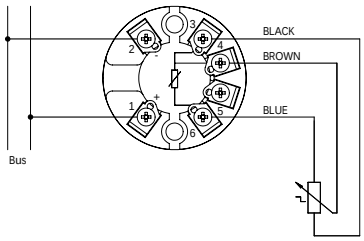

Control unit TP5350..

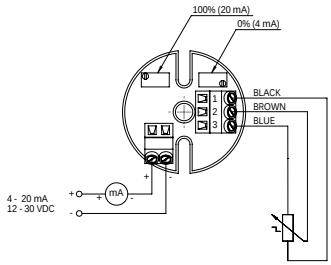

Control unit XT42SI Ex

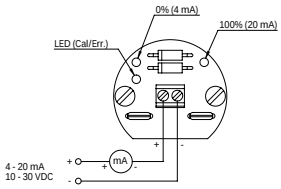

Control unit magnetostrictive

Some further data according to chapter Control Units 1011

The magnetic float level transmitter are based on a modular design and can be arranged individually.
Type key page 10 - 13

Temperature switch

Type:	TO	TS
Function:	Normally closed (NC)	Normally open (NO)
Switching capacity:	230 V / 0.5 A / 40 VA	230 V / 0.5 A / 40 VA
Temperature / Grading:	50°C ... 160°C / 5 K	80°C ... 160°C / 5 K
Accuracy:	± 5 K	± 5 K
Hysterese:	30 K ± 15 K	30 K ± 15 K

Temperature switch - Pepi

Type:	TPO	TPS
Function:	Normally closed (NC)	Normally open (NO)
Switching capacity:	230 V / 0.5 A / 40 VA	230 V / 0.5 A / 40 VA
Temperature / Grading:	30°C ... 120°C / 5 K	30°C ... 120°C / 5 K
Accuracy:	± 3 K	± 3 K
Hysterese:	± 1 K	± 1 K
Design temperature:	0°C ... 130°C	0°C ... 130°C

Temperature probe

Type:	TFA	TFB
Probe:	Pt 100	Pt 1000
Nominal response temperature:	-70°C ... 400°C	-70°C ... 400°C
Tolerance class:	B	B
Performance:	Acc. to IEC 751	Acc. to IEC 751
Connection:	2- / 3- or 4-wire	2- / 3- or 4-wire

The magnetic float level transmitter are based on a modular design and can be arranged individually.
Type key page 10 - 13

Heinrich Kübler AG
Ruessenstrasse 4 | CH-6340 Baar | Phone +41 (0)41 766 62 62 | Fax +41 (0)41 766 62 63 | E-Mail info@kubler.ch | Internet www.kubler.ch

Connection cable

Type	Material quality	Max. Ambient temperature
PVC	PVC connection cable	-20°C ... 80°C
PVCB	PVC connection cable with blue coating	-20°C ... 80°C
SIL	Silicone connection cable	-60°C ... 180°C
PUR	PUR connection cable	-40°C ... 80°C
RAD	Radox connection cable	-35°C ... 120°C
FTEF	Teflon strands	-65°C ... 200°C
FPVC	PVC strands	-5°C ... 70°C

Level switch

Level switch function

Function:	Normally open (NO) / S
Switching capacity:	230 V / 1.0 A / 100 VA
Function:	Normally closed (NC) / O
Switching capacity:	230 V / 0.5 A / 40 VA
Function:	Change over (SPDT) / U
Switching capacity:	230 V / 0.5 A / 40 VA

The magnetic float level transmitter are based on a modular design and can be arranged individually.
Type key page 10 - 13

Recording and controlling of fluid levels

Food industry

Machine & plant engineering

Shipbuilding

Chemical plants

Water treatment

Pharmaceutical industry

Air-conditioning technology

Oil rigs

Oil refineries

1003

MAGNETIC FLOAT SWITCHES

Table of content

Magnetic Float Switches / Content ... 60
Magnetic Float Switches / Functional description ... 61
Magnetic Float Switches / Type key ... 62
Magnetic Float Switches / Type key ... 63
Magnetic Float Switches / Type key ... 64
Magnetic Float Switches / Type key ... 65
Magnetic Float Switches / Stainless steel ... 66
Magnetic Float Switches / Stainless steel ... 67
Magnetic Float Switches / Stainless steel ... 68
Magnetic Float Switches / Stainless steel ... 69
Magnetic Float Switches / Stainless steel ... 70
Magnetic Float Switches / Stainless steel - flexible ... 71
Magnetic Float Switches / Stainless steel - adjustable ... 72
Magnetic Float Switches / Stainless steel - angulate ... 73
Magnetic Float Switches / Stainless steel - Displacer ... 74
Magnetic Float Switches / Stainless steel - Displacer ... 75
Magnetic Float Switches / Stainless steel - with oval flange ... 76
Magnetic Float Switches / Stainless steel - 3A Sanitary Standard ... 77
Magnetic Float Switches / Stainless steel - with hub float ... 78
Magnetic Float Switches / Stainless steel - Pendular switch ... 79
Magnetic Float Switches / Brass ... 80
Magnetic Float Switches / Brass ... 81
Magnetic Float Switches / Brass ... 82
Magnetic Float Switches / Brass ... 83
Magnetic Float Switches / Polyamide - flexible ... 84
Magnetic Float Switches / Polyamide - flexible ... 85
Magnetic Float Switches / with test function ... 86
Magnetic Float Switches / with test function ... 87
Magnetic Float Switches / Titanium ... 88
Magnetic Float Switches / Titanium ... 89
Magnetic Float Switches / Titanium ... 90
Magnetic Float Switches / Titanium ... 91
Magnetic Float Switches / Alloy C ... 92
Magnetic Float Switches / Alloy C ... 93
Magnetic Float Switches / PVC ... 94
Magnetic Float Switches / PVC ... 95
Magnetic Float Switches / Polypropylene ... 96
Magnetic Float Switches / Polypropylene ... 97
Magnetic Float Switches / Polypropylene ... 98
Magnetic Float Switches / Polypropylene - flexible ... 99
Magnetic Float Switches / PVDF ... 100
Magnetic Float Switches / PVDF ... 101
Magnetic Float Switches / Stainless steel - ECTFE coated ... 102
Magnetic Float Switches / Stainless steel - ECTFE coated ... 103
Magnetic Float Switches / Stainless steel - PFA coated ... 104
Magnetic Float Switches / Stainless steel - PFA coated ... 105
Magnetic Float Switches / Ball float ... 106
Magnetic Float Switches / Ball float ... 107
Magnetic Float Switches / Cylindrical float ... 108
Magnetic Float Switches / Cylindrical float ... 109
Magnetic Float Switches / Electrical connection ... 110
Magnetic Float Switches / Electrical connection ... 111
Magnetic Float Switches / Temperature sensor ... 112
Magnetic Float Switches / Connection cable ... 112
Magnetic Float Switches / Control unit ... 113

Heinrich Kübler AG
Ruessenstrasse 4 | CH-6340 Baar | Phone +41 (0)41 766 62 62 | Fax +41 (0)41 766 62 63 | E-Mail info@kubler.ch | Internet www.kubler.ch

Functional description

Functional description

This magnetic float switch works according to the float principle and by using magnetic transmission (permanent magnet / reed contact).
A float with a built-in magnetic system is conducted along a non-magnetic guide tube. Due to the magnetic field of the permanent magnet, a reed contact (protective gas contact), located in the guide tube, will be activated, after a defined height has been reached. As a result the electric circuit will be closed or interrupted, depending on the switch function.
Depending on the number of preset switching functions and their intervals, the device will be equipped with one or more floats.

Application area

Magnetic float switches are used for the monitoring of the filling level and the controlling of liquid media and they may be installed into vessels and tanks which meet the technical requirements, i.e. which are designed for the according operating parameters.
Due to the potential-free reed contacts the magnetic float switches form an ideal switching element in connection with PLC controlling.

Design limits

Specific gravity:	≥ 400 kg/m³
Design pressure:	-1 bar ... 150 bar
Design temperature:	-50°C ... 250°C

Magnetic Float Switches / Type key

Code 1

	Key 1 … / … / … - **Electrical connection**		Key 2 … / … / … - **Process connection material quality**		Key 3 … / … / … - **Process connection**
ALE	Aluminium terminal box 64 x 58 x 34 mm	V[1]	Stainless steel	E[1]	Thread to electrical direction, G/BSP
ALF	Aluminium terminal box 80 x 75 x 57 mm	VP[1]	Stainless steel electropolished / Ra ca. 0,8µm	R[1]	Thread to float direction, G/BSP
ALG	Aluminium terminal box 100 x 100 x 81 mm		(not attestable)	ENPT[1]	Thread to electrical direction, NPT
ALDA[1]	Aluminium terminal box Ø 95 x 84 mm	TI[1]	Titanium	RNPT[1]	Thread to float direction, NPT
AVA	Stainless steel terminal box Ø 82 x 110 mm	HC[1]	Alloy C	EM[1]	Thread to electrical direction, metric
AVDA[1]	Stainless steel terminal box Ø 82 x 110 mm	ME	Brass	RM[1]	Thread to float direction, metric
APA	Polyester terminal box 80 x 75 x 55 mm	VEEC[1]	Stainless steel ECTFE coated	FE[1]	Flange according to EN
APB	Polyester terminal box 80 x 75 x 55 mm / Exm	VPFA[1]	Stainless steel PFA coated	FA[1]	Flange according to ANSI
ABA	ABS terminal box 80 x 82 x 55 mm	P	PVC	F[1]	Flange according to …
K	Connection cable	PP	Polypropylene	FM74	Flange (Brass) Ø 74 mm
K68	Connection cable IP 68 (≥ G 3/8“)	PF	PVDF	FS[1]	Flange according to drawing
ASH	Connector Hirschmann DIN 43650	PA	Polyamide	SO	Standard oval flange 80 x 50 mm
ASHAA	Plastic connector HTS straight	ST	Steel	OP[1]	Without process connection
ASHAB	Plastic connector HTS angulate			TC[1]	Try-Clamp according to ISO 2852
ASHBA	Aluminium connector HTS straight			BK[1]	Aseptic blind cone according to DIN 11851
ASHBB	Aluminium connector HTS angulate			BKN[1]	Aseptic blind cone according to DIN 11851 with groove nut
ASQ	Quick-On Connector			BK64[1]	Aseptic blind cone acc. to DIN 11864/1 form A
ASMA	Connector M12 3-pins			BKN64[1]	Aseptic blind cone acc. to DIN 11864/1 form A with groove nut
ASMB	Connector M12 8-pins			BKD[1]	Try-Clamp according to DIN 32676
ASC	Connector C091D 7-pins			BKND[1]	Try-Clamp according to DIN 32676 with clamp
				GM[1]	Female thread G (only bypass chamber)
				NPTM[1]	Female thread NPT (only bypass chamber)
				GN[1]	Male thread G (only bypass chamber)
				NPTN[1]	Male thread NPT (only bypass chamber)
				SE[1]	Welding stub end (only bypass chamber)
				ERVE	Cutting ring union

Code 2

	Key 1 … - **Threaded connection**		Key 1 … - **Try-Clamp / Aseptic cone**
…	Threaded connection size	…	Nominal size

Code 2

	Key 1.1 (only for flange) … / … / … - **Flange connection**		Key 1.2 (only for flange) … / … / … - **Flange connection**		Key 1.3 (only for flange) … / … / … - **Flange connection**
…	Flange nominal bore	…	Flange pressure rating	…	Flange facing

Example

Code	1						2						3						4						5			
Key	1	/	2	/	3	-	1.1	/	1.2	/	1.3	-	1	/	2	/	3	/	4	-	1	/	2	/	3	/	4	-	1	/	2	/
Example	ALE	/	V	/	FE	-	80	/	16	/	B1	-	V	/	U	/	R22	/	TO	-	1	/	TFA2	/	TPAT	/	050	-	L1000	/	18	/

Black = not possible according to Atex / Blue = possible according to Atex Exia / Blue[1] = possible according to Atex Exia and Exd / Black[1] = possible according to Atex Exd

Heinrich Kübler AG
Ruessenstrasse 4 | CH-6340 Baar | Phone +41 (0)41 766 62 62 | Fax +41 (0)41 766 62 63 | E-Mail info@kubler.ch | Internet www.kubler.ch

Code 3

	Key 1 ... / ... / ... / ... - **Guide tube material quality**		Key 2 ... / ... / ... / ... - **Level switch function**		Key 3 ... / ... / ... / ... - **Level switch option**
V[1]	Stainless steel	U[1]	Change over (SPDT)*	R22[1]	Switch protective circuit with 22 ohm / 0.21 W resistor
VP[1]	Stainless steel electropolished / Ra ca. 0,8µm (not attestable)	S[1]	Normally open (NO)*	N[1]	Switch protective circuit according to NAMUR EN 60947
TI[1]	Titanium	O[1]	Normally closed (NC)*	HT	High temperature version 180-250°C
HC[1]	Alloy C		* Multiple selections possible e.g. ' OSS '		
ME	Brass				
VEEC[1]	Stainless steel ECTFE coated				
VPFA[1]	Stainless steel PFA coated				
P	PVC				
PP	Polypropylene				
PF	PVDF				
PA	Polyamide				

Code 3

	Key 4 ... / ... / ... / ... - **Temperature switch function**
TS[1]	Temperature switch normally open (NO)*
TO[1]	Temperature switch normally closed (NC)*
TPS[1]	Temperature switch normally open (NO)*
TPO[1]	Temperature switch normally closed (NC)*
	* Multiple selections possible e.g. ' TSTO '

Code 4

	Key 1 ... / ... / ... / ... - **Number of probes**		Key 2 ... / ... / ... / ... - **Temperature probe**		Key 3 ... / ... / ... / ... - **Temperature control unit**
...	Number of temperature probes	TFA2[1]	Pt 100 Probe / 2-wire	TPAT[1]	TP5333A
		TFA3[1]	Pt 100 Probe / 3-wire	TPBT[1]	TP5333D Ex
		TFA4[1]	Pt 100 Probe / 4-wire	TDAT[1]	TD5335A
		TFB2[1]	Pt 1000 Probe / 2-wire	TDBT[1]	TD5335D Ex
		TFB3[1]	Pt 1000 Probe / 3-wire	PAATP[1]	TP5350AP / PROFIBUS® PA
		TFB4[1]	Pt 1000 Probe / 4-wire	PABTP[1]	TP5350BP Ex / PROFIBUS® PA
		TF[1]	Temperature probe (acc. to customers device)	PAATF[1]	TP5350AF / FOUNDATION™ Fieldbus
				PABTF[1]	TP5350BF Ex / FOUNDATION™ Fieldbus

Code 4

	Key 4 ... / ... / ... / ... - **Temperature measuring range**
050[1]	0°C ... 50°C / 4 ... 20 mA
100[1]	0°C ... 100°C / 4 ... 20 mA
150	0°C ... 150°C / 4 ... 20 mA
200	0°C ... 200°C / 4 ... 20 mA
000	..°C ... ..°C / 4 ... 20 mA

Example

	5						6							7					8						9						**Code**
	3	/	4	/	5	-	1	/	2	/	3	/	4	-	1	/	2	/	3	-	1	/	2	/	3	-	1	/	2	/	3	**Key**
						-	1		SV72	/	24	/	V	-												-	EXIAG	/	PEDII			**Example**

Black = not possible according to Atex / Blue = possible according to Atex Exia / Blue[1] = possible according to Atex Exia and Exd / Black[1] = possible according to Atex Exd

Code 5

	Key 1 ... / ... / ... / ... / ... - **Length of instrument / Centre distance**		Key 2 ... / ... / ... / ... / ... - **Guide tube diameter (material quality)**		Key 3 ... / ... / ... / ... / ... - **Bypass chamber material quality**
L...[1]	Length of instrument in mm (Key 3 - 5 not applicable)	08[1]	Ø 08 mm (V / VP / M / P / PP)	V[1]	Stainless steel
M...[1]	Centre distance in mm (Chamber)	11[1]	Ø 11 mm (VEEC / VPFA)	VP[1]	Stainless steel electropolished / Ra ca. 0,8µm (not attestable)
		12[1]	Ø 12 mm (V / VP / M / TI / HC / PA / P / PP / PF)		
		14[1]	Ø 14 mm (V / VP / M / TI)	TI[1]	Titanium
		16[1]	Ø 16 mm (V / VP / P / PP / PF)	HC[1]	Alloy C
		17[1]	Ø 17 mm (VEEC / VPFA)	AL[1]	Aluminium Silafont-35
		18[1]	Ø 18 mm (V / VP / TI / HC)	VEEC[1]	Stainless steel ECTFE coated
		20[1]	Ø 20 mm (P / PP / PF)	VPFA[1]	Stainless steel PFA coated
		40[1]	Ø 40 mm (V / VP)	P	PVC
				PP	Polypropylene
				PF	PVDF

Code 5

	Key 4 ... / ... / ... / ... / ... - **Bypass chamber outside diameter**		Key 5 ... / ... / ... / ... / ... - **Bypass chamber wall thickness**
60[1]	Ø 60.30 mm (V / VP)	...	Bypass chamber wall thickness in mm
61[1]	Ø 60.33 mm (V / VP / TI / HC)		
63	Ø 63.00 mm (P / PP / PF)		
63[1]	Ø 63.50 mm (V / VP / VEEC / VPFA)		
64[1]	Ø 64.00 mm (AL)		
73[1]	Ø 73.03 mm (V / VP)		
88[1]	Ø 88.90 mm (V / VP)		
114[1]	Ø 114.30 mm (V / VP)		

Code 6

	Key 1 ... / ... / ... / ... - **Number of floats**		Key 2 ... / ... / ... / ... - **Float**		Key 3 ... / ... / ... / ... - **Inner bore of float**
...	Number of floats	...	Acc. to float table on page 106 - 109	...	Acc. to float table on page 106 - 109

Code 6

	Key 4 ... / ... / ... / ... - **Magnetic system**
...	Acc. to float table on page 106 - 109

Code 7

	Key 1 ... / ... / ... - **Additional design**		Key 2 ... / ... / ... - **Instruction for installation**		Key 3 ... / ... / ... - **Adjusting mechanism**
FG[1]	Guide tube in flexible design	GU[1]	Installation from bottom site	VE	Adjustable version with cutting ring union (only one time positioning possible on ATEX 94/9/EC applications)
NT	With test function	HH[1]	Process connection of displacer side-side		
WG[1]	Angled design	HV[1]	Process connection of displacer top side - bottom Vertical		
HFF	Hub float with pipe (Code 5 key 3 - 5 not applicable)				
HSF	Hub float with wire (Code 5 key 2 - 5 not applicable)				
PSS	Pendular switch with float (Code 5 key 3 - 5 not applicable)				
PSP	Pendular switch with paddle (Code 5 key 3 - 5 not applicable)				

Example

Code	1								2								3								4								5			
Key	1	/	2	/	3	-	1.1	/	1.2	/	1.3	-	1	/	2	/	3	/	4	-	1	/	2	/	3	/	4	-	1	/	2	/
Example	ALE	/	V	/	FE	-	80	/	16	/	B1	-	V	/	U	/	R22	/	TO	-	1	/	TFA2	/	TPAT	/	050	-	L1000	/	18	/

Black = not possible according to Atex / Blue = possible according to Atex Exia / Blue[1] = possible according to Atex Exia and Exd / Black[1] = possible according to Atex Exd

Heinrich Kübler AG
Ruessenstrasse 4 | CH-6340 Baar | Phone +41 (0)41 766 62 62 | Fax +41 (0)41 766 62 63 | E-Mail info@kubler.ch | Internet www.kubler.ch

Code 8

	Key 1 ... / ... / ... - **Length of cable**		Key 2 ... / ... / ... - **Connection cable**		Key 3 ... / ... / ... - **Connection cable option**
...	Length of cable in meter	PVC[1]	PVC connection cable	KA[1]	Shielded
		PVCB[1]	PVC connection cable with blue coating	KB[1]	Shielded / oil-resistant
		SIL[1]	Silicone connection cable	KC[1]	Shielded / oil-resistant / halogen-free
		PUR[1]	PUR connection cable	KD[1]	Oil-resistant
		RAD[1]	Radox connection cable	KE[1]	Oil-resistant / halogen-free
		FTEF[1]	Teflon strands	KF[1]	Halogen-free
		FPVC[1]	PVC strands		

Code 9

	Key 1 ... / ... / ... - **Approvals / 1**		Key 2 ... / ... / ... - **Approvals / 2**		Key 3 ... / ... / ... - **Approvals / 3**
EXIAG	Acc. to Exia, atmosphere gas	PEDII[1]	Acc. to PED97/23/EC category II	3A[1]	Approval 3A Sanitary Standard
EXIAGD	Acc. to Exia, atmosphere gas and dust	PEDIV[1]	Acc. to PED97/23/EC category IV	ABS[1]	Approval American Bureau of Shipping
EXDG[1]	Acc. to Exd, atmosphere gas	PEDIVW[1]	Acc. to PED 97/23/EC, category IV and approval federal water act §19	BV[1]	Approval Bureau Veritas
EXDGD[1]	Acc. to Exd, atmosphere gas and dust			GL[1]	Approval Germanischer Lloyd
EXIADG[1]	Acc. to Exia and Exd, atmosphere gas	W[1]	Approval federal water act §19	LR[1]	Approval Lloyd's Register
EXIADGD[1]	Acc. to Exia and Exd, atmosphere gas and dust			EAC1[1]	Approval EAC TR CU 004/2011 & 012/2011 & 020/2011

Example

	5				6						7				8				9				
Code																							
Key	3	/	4	/	5	-	1	/	2	/	3	/	4	-	1	/	2	/	3	-	1	/	2	/	3
Example						-	1		SV72	/	24	/	V	-						-	EXIAG	/	PEDII		

Black = not possible according to Atex / Blue = possible according to Atex Exia / Blue[1] = possible according to Atex Exia and Exd / Black[1] = possible according to Atex Exd

Electrical connection

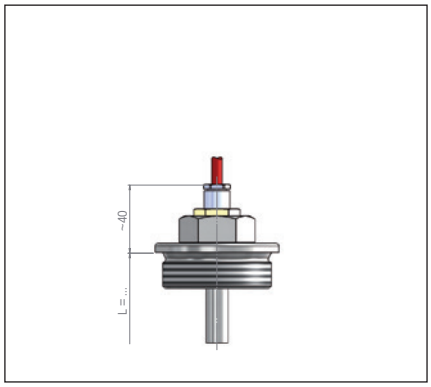

Connection type: K
Material quality: According as cable type
Cable entry: PG or metric
Ingress protection class: IP 55 (optional IP 68)
Ambient temperature: -40°C ... 200°C

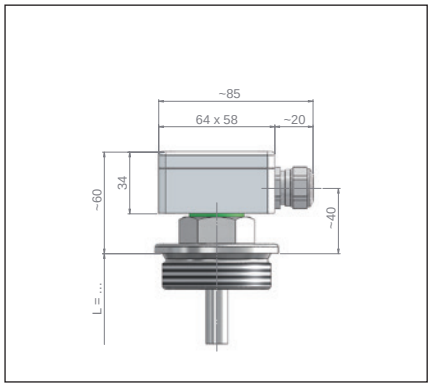

Connection type: ALE
Material quality: Aluminium coated RAL 7001
Cable entry: M20 x 1.5
Ingress protection class: IP 65
Ambient temperature: -40°C ... 100°C

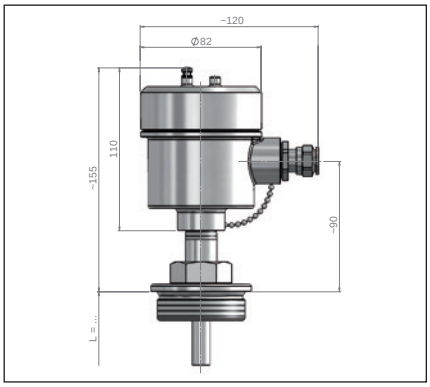

Connection type: AVA / AVDA (Exd)
Material quality: Stainless steel A4 (SS316)
Cable entry: M20 x 1.5
Ingress protection class: IP 67 / (Exd / IP 68)
Ambient temperature: -40°C ... 85°C

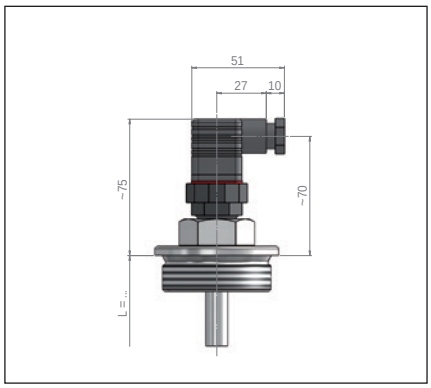

Connection type: ASH
Material quality: PA
Cable entry: M16
Ingress protection class: IP 65
Ambient temperature: -40°C ... 125°C

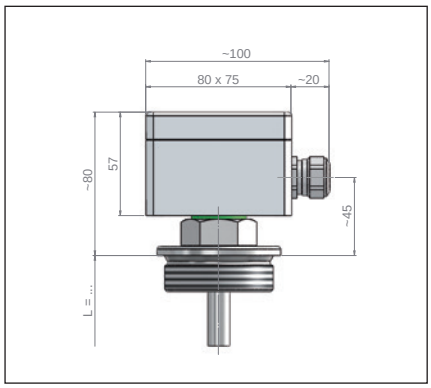

Connection type: ALF
Material quality: Aluminium coated RAL 7001
Cable entry: M20 x 1.5
Ingress protection class: IP 65
Ambient temperature: -40°C ... 100°C

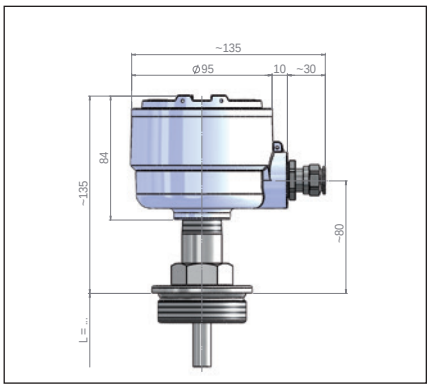

Connection type: ALDA (Exd)
Material quality: Aluminium coated RAL 9006
Cable entry: M20 x 1.5
Ingress protection class: IP 68
Ambient temperature: -40°C ... 100°C

Approvals / Certificates

ATEX*

II 1/2G Ex c ia IIC T6 - T3 bzw. T4 Ga/Gb	II 1/2G Ex c ia IIC T6 - T3 Ga/Gb	II 2G Ex c d IIC T6 - T4 Gb
II 2G Ex c d IIC T6 - T4 Gb	II 2D Ex c tb IIIC T80°C - T190°C Db IP6X	II 2D Ex c tb IIIC T80°C - T190°C Db IP6X

Liquid temperature Exia max. 180°C / Exd max. 120°C

Type of protection intrinsic safety Ex ia IIC switch or temperature switch	I_i ≤ 100 mA		
Type of protection intrinsic safety Ex ia IIC temperature probe	U_i ≤ 28 V	I_i ≤ 100 mA	P_i ≤ 700 mW
Type of protection intrinsic safety Ex ia IIC with option /N (NAMUR EN 60947)	U_i ≤ 15 VDC	I_i ≤ 60 mA	
Type of protection „flameproof enclosure“	U_N ≤ 250 VDC/AC	P_{SN} ≤ 50 W/VA	P_{FN} ≤ 700 mW
Type of protection „flameproof enclosure“ with option /N (NAMUR EN 60947)	U_N ≤ 15 VDC	I_N ≤ 60 mA	
Type of protection „flameproof enclosure“ with option /R22 (resistor)	U_N ≤ 250 VDC/AC	I_N ≤ 100 mA	P_V ≤ 0.21 W

Further electrical connections page 110 - 111
Further process connection according to type key page 62
Further floats page 106 - 109

The magnetic float switches are based on a modular design and can be arranged individually.
Type key page 62 - 65

* = The approval is dependent on the equipment combination

Heinrich Kübler AG
Ruessenstrasse 4 | CH-6340 Baar | Phone +41 (0)41 766 62 62 | Fax +41 (0)41 766 62 63 | E-Mail info@kubler.ch | Internet www.kubler.ch

Type	K/V/E-1/8-V/..-L../8-1/SVK27/10/A-../PVC	K/V/E-1/8-V/..-L../8-1/SV29/9/A-../SIL
Material quality:	1.4404 / 1.4435 / 1.4571 (316L / 316Ti)	1.4404 / 1.4435 / 1.4571 (316L / 316Ti)
Electrical connection:	PVC connection cable	Silicon connection cable
Process connection:	G 1/8“	G 1/8“
Guide tube:	Ø 8 mm	Ø 8 mm
Length of instrument:	≤ 1000 mm	≤ 1000 mm
Float:	SVK27/10/A Ø 27 mm	SV29/9/A Ø 29 mm
Specific gravity:	≥ 800 kg/m³	≥ 900 kg/m³
Design pressure:	-1 bar ... 6 bar	-1 bar ... 35 bar
Design temperature:	-20°C ... 80°C	-30°C ... 180°C
Ingress protection class:	IP 55	IP 55
Mounting position:	Vertical +/-30°	Vertical +/-30°
Level switch function		
Function:	Normally open (NO) / S	Normally open (NO) / S
Switching capacity:	150 V / 0.5 A / 10 VA	150 V / 0.5 A / 10 VA
Maximal number of contacts:	3 pieces	3 pieces
Function:	Normally closed (NC) / O	Normally closed (NC) / O
Switching capacity:	150 V / 0.5 A / 10 VA	150 V / 0.5 A / 10 VA
Maximal number of contacts:	3 pieces	3 pieces
Function:	Change over (SPDT) / U	Change over (SPDT) / U
Switching capacity:	150 V / 0.5 A / 10 VA	150 V / 0.5 A / 10 VA
Maximal number of contacts:	2 pieces	2 pieces
Option temperature probe / Page 112		
Temperature probe:	Pt-100 / Pt-1000	Pt-100 / Pt-1000
Norm:	IEC 751 Kl.B	IEC 751 Kl.B
Option temperature switch / Page 112		
Function:	-	-
Switching capacity:	-	-
Accuracy / Hysteresis:	-	-
Temperature / Grading:	-	-

Minimum measures

K/V/E-1/8-V/..-L../8-1/SVK27/10/A-../PVC
L1: ≥ 30 mm
U: 30 mm
Contact distance: ≥ 20 mm
Float distance: ≥ 45 mm

Approvals / Certificates

ATEX / EAC / PED / SIL1 / WHG

Minimum measures

K/V/E-1/8-V/..-L../8-1/SV29/9/A-../SIL
L1: ≥ 35 mm
U: 30 mm
Contact distance: ≥ 20 mm
Float distance: ≥ 45 mm

Approvals / Certificates

ATEX / EAC / PED / SIL1 / WHG

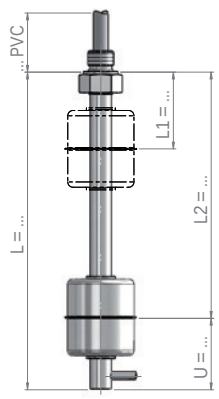

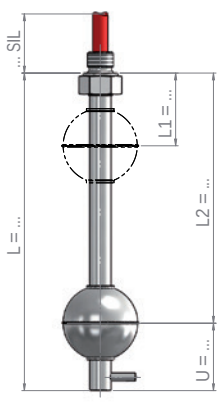

The magnetic float switches are based on a modular design and can be arranged individually.
Type key page 62 - 65

Magnetic Float Switches / Stainless steel

Type	K/V/E-3/8-V/..-L../12-1/SVK44/15/A-../PVC	K/V/E-3/8-V/..-L../12-1/SV52/15/A-../SIL
Material quality:	1.4404 / 1.4435 / 1.4571 (316L / 316Ti)	1.4404 / 1.4435 / 1.4571 (316L / 316Ti)
Electrical connection:	PVC connection cable	Silicon connection cable
Process connection:	G 3/8“	G 3/8“
Guide tube:	Ø 12 mm (optional Ø 14 mm)	Ø 12 mm (optional Ø 14 mm)
Length of instrument:	≤ 5000 mm*	≤ 5000 mm*
Float:	SVK44/15/A Ø 44 mm	SV52/15/A Ø 52 mm
Specific gravity:	≥ 800 kg/m³	≥ 680 kg/m³
Design pressure:	-1 bar ... 25 bar	-1 bar ... 30 bar
Design temperature:	-20°C ... 80°C	-30°C ... 180°C
Ingress protection class:	IP 55 (optional IP 68)	IP 55 (optional IP 68)
Mounting position:	Vertical +/-30°	Vertical +/-30°
Level switch function		
Function:	Normally open (NO) / S	Normally open (NO) / S
Switching capacity:	230 V / 1.0 A / 100 VA	230 V / 1.0 A / 100 VA
Maximal number of contacts:	5 pieces	5 pieces
Function:	Normally closed (NC) / O	Normally closed (NC) / O
Switching capacity:	230 V / 0.5 A / 40 VA	230 V / 0.5 A / 40 VA
Maximal number of contacts:	5 pieces	5 pieces
Function:	Change over (SPDT) / U	Change over (SPDT) / U
Switching capacity:	230 V / 0.5 A / 40 VA	230 V / 0.5 A / 40 VA
Maximal number of contacts:	4 pieces	4 pieces
Option temperature probe / Page 112		
Temperature probe:	Pt-100 / Pt-1000	Pt-100 / Pt-1000
Norm:	IEC 751 Kl.B	IEC 751 Kl.B
Option temperature switch / Page 112		
Function:	Normally closed (NC) or normally open (NO)	Normally closed (NC) or normally open (NO)
Switching capacity:	Page 112	Page 112
Accuracy / Hysteresis:	Page 112	Page 112
Temperature / Grading:	Page 112	Page 112

Minimum measures

K/V/E-3/8-V/..-L../12-1/SVK44/15/A-../PVC
L1: ≥ 50 mm
U: 45 mm
Contact distance: ≥ 20 mm
Float distance: ≥ 70 mm

Approvals / Certificates

ABS / ATEX / BV / EAC / GL / LR / PED / SIL1 / WHG

Minimum measures

K/V/E-3/8-V/..-L../12-1/SV52/15/A-../SIL
L1: ≥ 55 mm
U: 45 mm
Contact distance: ≥ 20 mm
Float distance: ≥ 70 mm

Approvals / Certificates

ABS / ATEX / BV / EAC / GL / LR / PED / SIL1 / WHG

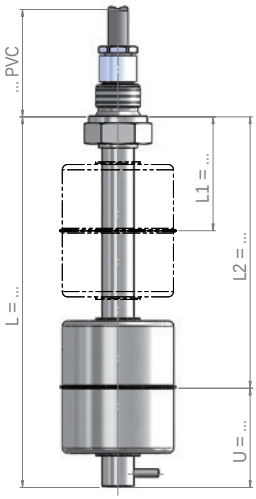

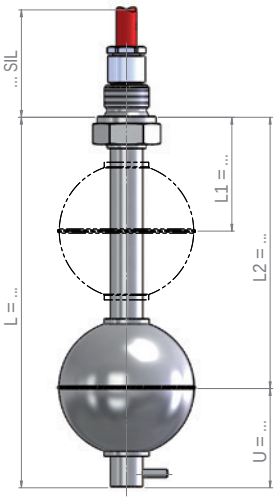

The magnetic float switches are based on a modular design and can be arranged individually.
Type key page 62 - 65

* ATEX-design = guide tube length / per float ≥ 4000 mm by calculation

Heinrich Kübler AG
Ruessenstrasse 4 | CH-6340 Baar | Phone +41 (0)41 766 62 62 | Fax +41 (0)41 766 62 63 | E-Mail info@kubler.ch | Internet www.kubler.ch

Type	ALE/V/R-1½-V/..-L../12-1/SVK44/15/A	ALE/V/R-2-V/..-L../12-1/SV52/15/A
Material quality:	1.4404 / 1.4435 / 1.4571 (316L / 316Ti)	1.4404 / 1.4435 / 1.4571 (316L / 316Ti)
Electrical connection:	ALE Aluminium terminal box	ALE Aluminium terminal box
Process connection:	G 1½“	G 2“
Guide tube:	Ø 12 mm (optional Ø 14 mm)	Ø 12 mm (optional Ø 14 mm)
Length of instrument:	≤ 5000 mm*	≤ 5000 mm*
Float:	SVK44/15/A Ø 44 mm	SV52/15/A Ø 52 mm
Specific gravity:	≥ 800 kg/m³	≥ 680 kg/m³
Design pressure:	-1 bar ... 25 bar	-1 bar ... 30 bar
Design temperature:	-30°C ... 180°C (optional 250°C)	-30°C ... 180°C (optional 250°C)
Ingress protection class:	IP 65	IP 65
Mounting position:	Vertical +/-30°	Vertical +/-30°
Level switch function		
Function:	Normally open (NO) / S	Normally open (NO) / S
Switching capacity:	230 V / 1.0 A / 100 VA	230 V / 1.0 A / 100 VA
Maximal number of contacts:	4 pieces (5 pieces with ALF terminal box)	4 pieces (5 pieces with ALF terminal box)
Function:	Normally closed (NC) / O	Normally closed (NC) / O
Switching capacity:	230 V / 0.5 A / 40 VA	230 V / 0.5 A / 40 VA
Maximal number of contacts:	4 pieces (5 pieces with ALF terminal box)	4 pieces (5 pieces with ALF terminal box)
Function:	Change over (SPDT) / U	Change over (SPDT) / U
Switching capacity:	230 V / 0.5 A / 40 VA	230 V / 0.5 A / 40 VA
Maximal number of contacts:	3 pieces (4 pieces with ALF terminal box)	3 pieces (4 pieces with ALF terminal box)
Option temperature probe / Page 112		
Temperature probe:	Pt-100 / Pt-1000	Pt-100 / Pt-1000
Norm:	IEC 751 Kl.B	IEC 751 Kl.B
Option temperature switch / Page 112		
Function:	Normally closed (NC) or normally open (NO)	Normally closed (NC) or normally open (NO)
Switching capacity:	Page 112	Page 112
Accuracy / Hysteresis:	Page 112	Page 112
Temperature / Grading:	Page 112	Page 112

Minimum measures

ALE/V/R-1½-V/..-L../12-1/SVK44/15/A
L1: ≥ 50 mm
U: 45 mm
Contact distance: ≥ 20 mm
Float distance: ≥ 70 mm

Approvals / Certificates

ABS / ATEX / BV / EAC / GL / LR / PED / SIL1 / WHG

Minimum measures

ALE/V/R-2-V/..-L../12-1/SV52/15/A
L1: ≥ 55 mm
U: 45 mm
Contact distance: ≥ 20 mm
Float distance: ≥ 70 mm

Approvals / Certificates

ABS / ATEX / BV / EAC / GL / LR / PED / SIL1 / WHG

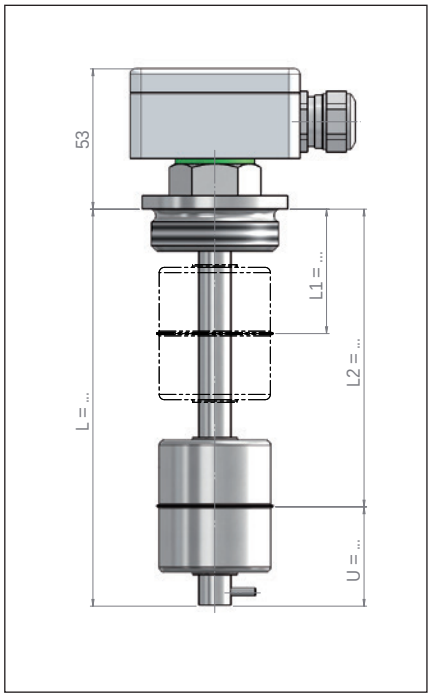

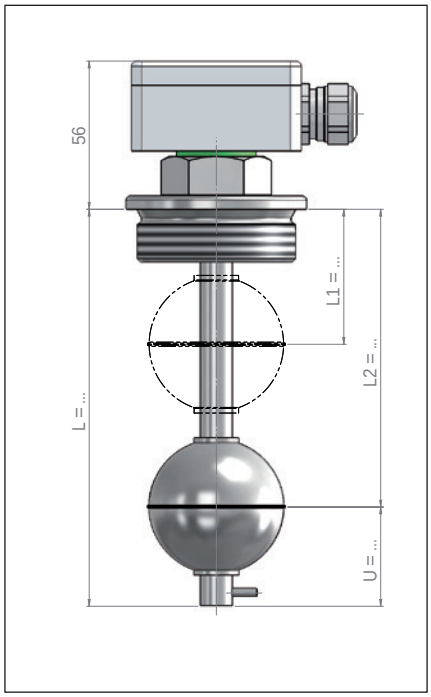

The magnetic float switches are based on a modular design and can be arranged individually.
Type key page 62 - 65

* ATEX-design = guide tube length / per float ≥ 4000 mm by calculation

Magnetic Float Switches / Stainless steel

Type	ALE/V/FE-80/16/B1-V/..-L../18-1/SV72/24/V	ALE/V/FE-100/16/B1-V/..-L../18-1/SV98/23/A
Material quality:	1.4404 / 1.4435 / 1.4571 (316L / 316Ti)	1.4404 / 1.4435 / 1.4571 (316L / 316Ti)
Electrical connection:	ALE Aluminium terminal box	ALE Aluminium terminal box
Process connection:	Flange EN DN 80 / PN 16 / Form B1	Flange EN DN 100 / PN 16 / Form B1
Guide tube:	Ø 18 mm	Ø 18 mm
Length of instrument:	≤ 6000 mm*	≤ 6000 mm*
Float:	SV72/24/V Ø 72 mm	SV98/23/A Ø 98 mm
Specific gravity:	≥ 620 kg/m³	≥ 570 kg/m³
Design pressure:	-1 bar ... 16 bar (depending on temperature)	-1 bar ... 16 bar (depending on temperature)
Design temperature:	-30°C ... 180°C (optional 250°C)	-30°C ... 180°C (optional 250°C)
Ingress protection class:	IP 65	IP 65
Mounting position:	Vertical +/-30°	Vertical +/-30°
Level switch function		
Function:	Normally open (NO) / S	Normally open (NO) / S
Switching capacity:	230 V / 1.0 A / 100 VA	230 V / 1.0 A / 100 VA
Maximal number of contacts:	4 pieces (5 pieces with ALF terminal box)	4 pieces (5 pieces with ALF terminal box)
Function:	Normally closed (NC) / O	Normally closed (NC) / O
Switching capacity:	230 V / 0.5 A / 40 VA	230 V / 0.5 A / 40 VA
Maximal number of contacts:	4 pieces (5 pieces with ALF terminal box)	4 pieces (5 pieces with ALF terminal box)
Function:	Change over (SPDT) / U	Change over (SPDT) / U
Switching capacity:	230 V / 0.5 A / 40 VA	230 V / 0.5 A / 40 VA
Maximal number of contacts:	3 pieces (4 pieces with ALF terminal box)	3 pieces (4 pieces with ALF terminal box)
Option temperature probe / Page 112		
Temperature probe:	Pt-100 / Pt-1000	Pt-100 / Pt-1000
Norm:	IEC 751 Kl.B	IEC 751 Kl.B
Option temperature switch / Page 112		
Function:	Normally closed (NC) or normally open (NO)	Normally closed (NC) or normally open (NO)
Switching capacity:	Page 112	Page 112
Accuracy / Hysteresis:	Page 112	Page 112
Temperature / Grading:	Page 112	Page 112

Minimum measures

ALE/V/FE-80/16/B1-V/..-L../18-1/SV72/24/V
L1: ≥ 60 mm
U: 60 mm
Contact distance: ≥ 20 mm
Float distance: ≥ 90 mm

Approvals / Certificates

ABS / ATEX / BV / EAC / GL / LR / PED / SIL1 / WHG

Minimum measures

ALE/V/FE-100/16/B1-V/..-L../18-1/SV98/23/A
L1: ≥ 80 mm
U: 70 mm
Contact distance: ≥ 20 mm
Float distance: ≥ 115 mm

Approvals / Certificates

ABS / ATEX / BV / EAC / GL / LR / PED / SIL1 / WHG

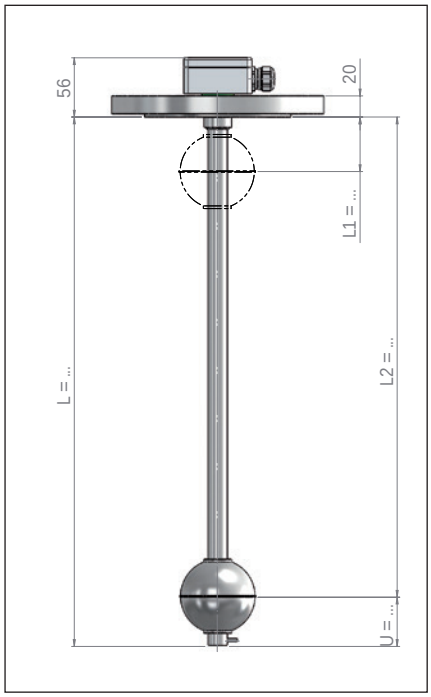

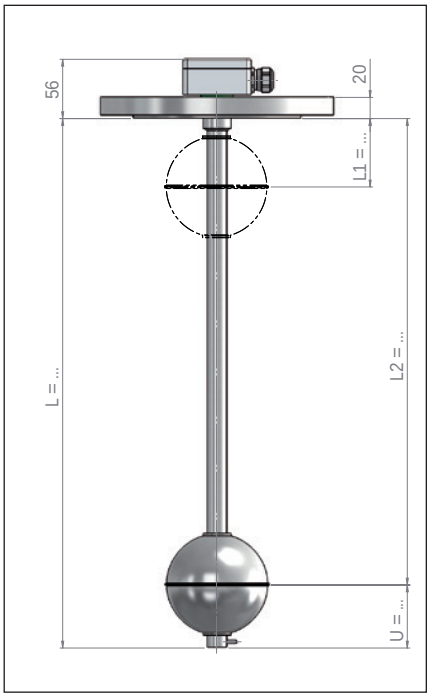

The magnetic float switches are based on a modular design and can be arranged individually.
Type key page 62 - 65

* ATEX-design = guide tube length / per float ≥ 4000 mm by calculation

Heinrich Kübler AG
Ruessenstrasse 4 | CH-6340 Baar | Phone +41 (0)41 766 62 62 | Fax +41 (0)41 766 62 63 | E-Mail info@kubler.ch | Internet www.kubler.ch

Type	ALE/V/FE-80/16/B1-V/..-L../16-1/SV72/24/V-FG	ALE/V/R-1-V/..-L../16-1/SV72/24/V-FG
Material quality:	1.4404 / 1.4435 / 1.4571 (316L / 316Ti)	1.4404 / 1.4435 / 1.4571 (316L / 316Ti)
Electrical connection:	ALE Aluminium terminal box	ALE Aluminium terminal box
Process connection:	Flange EN DN 80 / PN 16 / Form B1	G 1“
Guide tube:	Ø 16 mm	Ø 16 mm
Length of instrument:	≤ 15000 mm*	≤ 15000 mm*
Float:	SV72/24/V Ø 72 mm	SV72/24/V Ø 72 mm
Specific gravity:	≥ 620 kg/m³	≥ 620 kg/m³
Design pressure:	-1 bar ... 16 bar (depending on temperature)	-1 bar ... 16 bar (depending on temperature)
Design temperature:	-30°C ... 180°C	-30°C ... 180°C
Ingress protection class:	IP 65	IP 65
Mounting position:	Vertical +/-30°	Vertical +/-30°
Level switch function		
Function:	Normally open (NO) / S	Normally open (NO) / S
Switching capacity:	230 V / 1.0 A / 100 VA	230 V / 1.0 A / 100 VA
Maximal number of contacts:	4 pieces (5 pieces with ALF terminal box)	4 pieces (5 pieces with ALF terminal box)
Function:	Normally closed (NC) / O	Normally closed (NC) / O
Switching capacity:	230 V / 0.5 A / 40 VA	230 V / 0.5 A / 40 VA
Maximal number of contacts:	4 pieces (5 pieces with ALF terminal box)	4 pieces (5 pieces with ALF terminal box)
Function:	Change over (SPDT) / U	Change over (SPDT) / U
Switching capacity:	230 V / 0.5 A / 40 VA	230 V / 0.5 A / 40 VA
Maximal number of contacts:	3 pieces (4 pieces with ALF terminal box)	3 pieces (4 pieces with ALF terminal box)
Option temperature probe / Page 112		
Temperature probe:	Pt-100 / Pt-1000	Pt-100 / Pt-1000
Norm:	IEC 751 Kl.B	IEC 751 Kl.B
Option temperature switch / Page 112		
Function:	Normally closed (NC) or normally open (NO)	Normally closed (NC) or normally open (NO)
Switching capacity:	Page 112	Page 112
Accuracy / Hysteresis:	Page 112	Page 112
Temperature / Grading:	Page 112	Page 112

Minimum measures

ALE/V/FE-80/16/B1-V/..-L../16-1/SV72/24/V-FG
L1: ≥ 60 mm
U: 60 mm
Contact distance: ≥ 20 mm
Float distance: ≥ 90 mm

Approvals / Certificates

ATEX / EAC / PED / SIL1

Minimum measures

ALE/V/R-1-V/..-L../16-1/SV72/24/V-FG
L1: ≥ 60 mm
U: 60 mm
Contact distance: ≥ 20 mm
Float distance: ≥ 90 mm

Approvals / Certificates

ATEX / EAC / PED / SIL1

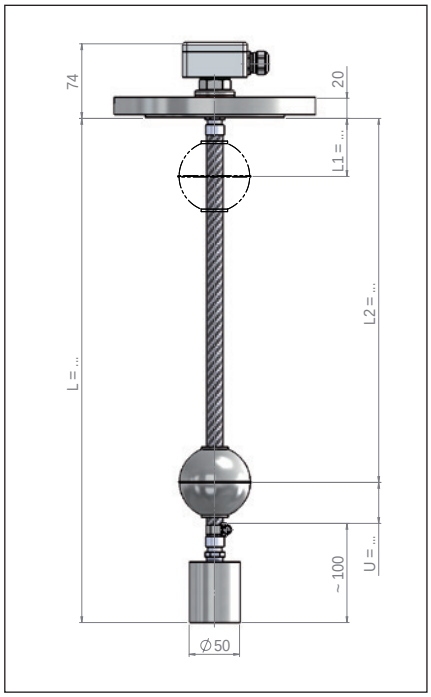

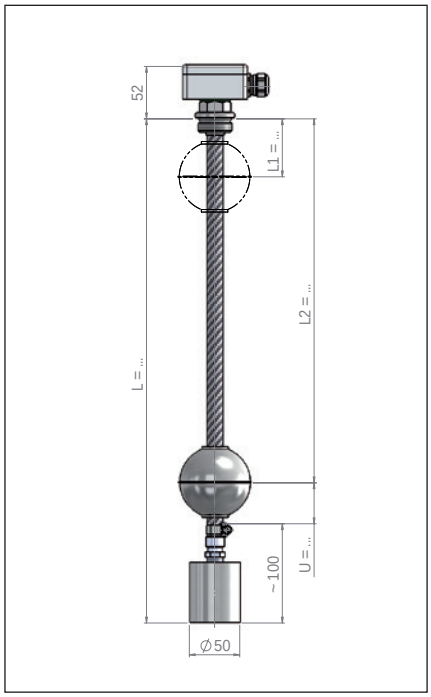

The magnetic float switches are based on a modular design and can be arranged individually.
Type key page 62 - 65

* ATEX-design = guide tube length / per float ≥ 4000 mm by calculation

Magnetic Float Switches / Stainless steel - adjustable

Type	K/V/R-1/2-V/..-L../12-1/SVK44/15/A-../SIL-VE	ALE/V/R-2-V/..-L../12-1/SV52/15/A-VE
Material quality:	1.4404 / 1.4435 / 1.4571 (316L / 316Ti)	1.4404 / 1.4435 / 1.4571 (316L / 316Ti)
Electrical connection:	Silicon connection cable	ALE Aluminium terminal box
Process connection:	G 1/2“	G 2“
Guide tube:	Ø 12 mm, adjustable	Ø 12 mm, adjustable
Length of instrument:	≤ 3000 mm	≤ 3000 mm
Float:	SVK44/15/A Ø 44 mm	SV52/15/A Ø 52 mm
Specific gravity:	≥ 800 kg/m³	≥ 680 kg/m³
Design pressure:	-1 bar ... 3 bar	-1 bar ... 3 bar
Design temperature:	-30°C ... 180°C	-30°C ... 180°C
Ingress protection class:	IP 55	IP 65
Mounting position:	Vertical +/-30°	Vertical +/-30°
Level switch function		
Function:	Normally open (NO) / S	Normally open (NO) / S
Switching capacity:	230 V / 1.0 A / 100 VA	230 V / 1.0 A / 100 VA
Maximal number of contacts:	5 pieces	4 pieces (5 pieces with ALF terminal box)
Function:	Normally closed (NC) / O	Normally closed (NC) / O
Switching capacity:	230 V / 0.5 A / 40 VA	230 V / 0.5 A / 40 VA
Maximal number of contacts:	5 pieces	4 pieces (5 pieces with ALF terminal box)
Function:	Change over (SPDT) / U	Change over (SPDT) / U
Switching capacity:	230 V / 0.5 A / 40 VA	230 V / 0.5 A / 40 VA
Maximal number of contacts:	4 pieces	3 pieces (4 pieces with ALF terminal box)
Option temperature probe / Page 112		
Temperature probe:	Pt-100 / Pt-1000	Pt-100 / Pt-1000
Norm:	IEC 751 Kl.B	IEC 751 Kl.B
Option temperature switch / Page 112		
Function:	Normally closed (NC) or normally open (NO)	Normally closed (NC) or normally open (NO)
Switching capacity:	Page 112	Page 112
Accuracy / Hysteresis:	Page 112	Page 112
Temperature / Grading:	Page 112	Page 112

Minimum measures

K/V/R-1/2-V/..-L../12-1/SVK44/15/A-../SIL-VE
L1: ≥ 50 mm
U: 45 mm
Contact distance: ≥ 20 mm
Float distance: ≥ 70 mm

Approvals / Certificates

PED / SIL1

Minimum measures

ALE/V/R-2-V/..-L../12-1/SV52/15/A-VE
L1: ≥ 55 mm
U: 45 mm
Contact distance: ≥ 20 mm
Float distance: ≥ 70 mm

Approvals / Certificates

PED / SIL1

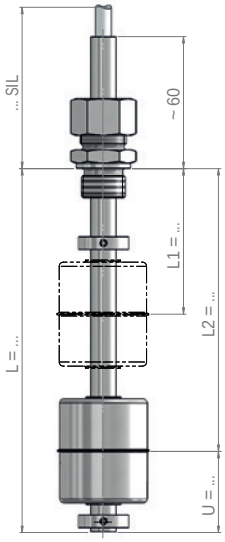

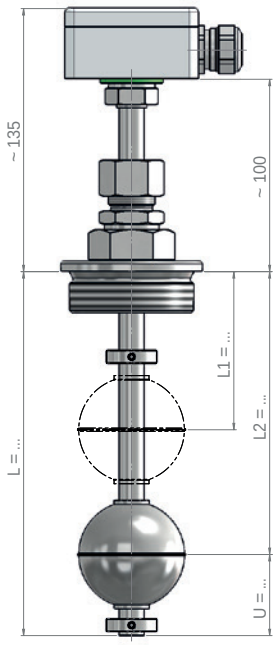

The magnetic float switches are based on a modular design and can be arranged individually.
Type key page 62 - 65

Heinrich Kübler AG
Ruessenstrasse 4 | CH-6340 Baar | Phone +41 (0)41 766 62 62 | Fax +41 (0)41 766 62 63 | E-Mail info@kubler.ch | Internet www.kubler.ch

Type	K/V/E-3/8-V/..-L../12-1/SVK44/15/A-WG-../PVC	ALE/V/R-2-V/..-L../12-1/SV52/15/A-WG
Material quality:	1.4404 / 1.4435 / 1.4571 (316L / 316Ti)	1.4404 / 1.4435 / 1.4571 (316L / 316Ti)
Electrical connection:	PVC connection cable	ALE Aluminium terminal box
Process connection:	G 3/8“	G 2“
Guide tube:	Ø 12 mm (optional Ø 14 mm)	Ø 12 mm (optional Ø 14 mm)
Length of instrument:	≤ 3000 mm	≤ 3000 mm
Float:	SVK44/15/A Ø 44 mm	SV52/15/A Ø 52 mm
Specific gravity:	≥ 800 kg/m³	≥ 680 kg/m³
Design pressure:	-1 bar ... 25 bar	-1 bar ... 30 bar
Design temperature:	-20°C ... 80°C	-30°C ... 180°C (optional 250°C)
Ingress protection class:	IP 55	IP 55
Mounting position:	Vertical +/-30°	Vertical +/-30°
Level switch function		
Function:	Normally open (NO) / S	Normally open (NO) / S
Switching capacity:	230 V / 1.0 A / 100 VA	230 V / 1.0 A / 100 VA
Maximal number of contacts:	5 pieces	4 pieces (5 pieces with ALF terminal box)
Function:	Normally closed (NC) / O	Normally closed (NC) / O
Switching capacity:	230 V / 0.5 A / 40 VA	230 V / 0.5 A / 40 VA
Maximal number of contacts:	5 pieces	4 pieces (5 pieces with ALF terminal box)
Function:	Change over (SPDT) / U	Change over (SPDT) / U
Switching capacity:	230 V / 0.5 A / 40 VA	230 V / 0.5 A / 40 VA
Maximal number of contacts:	4 pieces	3 pieces (4 pieces with ALF terminal box)
Option temperature probe / Page 112		
Temperature probe:	Pt-100 / Pt-1000	Pt-100 / Pt-1000
Norm:	IEC 751 Kl.B	IEC 751 Kl.B
Option temperature switch / Page 112		
Function:	Normally closed (NC) or normally open (NO)	Normally closed (NC) or normally open (NO)
Switching capacity:	Page 112	Page 112
Accuracy / Hysteresis:	Page 112	Page 112
Temperature / Grading:	Page 112	Page 112

Minimum measures

K/V/E-3/8-V/..-L../12-1/SVK44/15/A-WG-../PVC
L1: ≥ 75 mm
U: 45 mm
C: ≥ 75 mm
Contact distance: ≥ 20 mm
Float distance: ≥ 70 mm

Approvals / Certificates

ABS / ATEX / BV / EAC / GL / LR / PED / SIL1 / WHG

Minimum measures

ALE/V/R-2-V/..-L../12-1/SV52/15/A-WG
L1: ≥ 75 mm
U: 45 mm
C: ≥ 75 mm
Contact distance: ≥ 20 mm
Float distance: ≥ 70 mm

Approvals / Certificates

ABS / ATEX / BV / EAC / GL / LR / PED / SIL1 / WHG

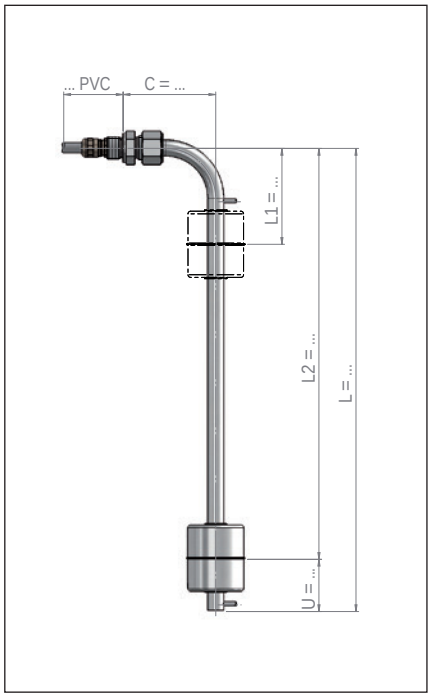

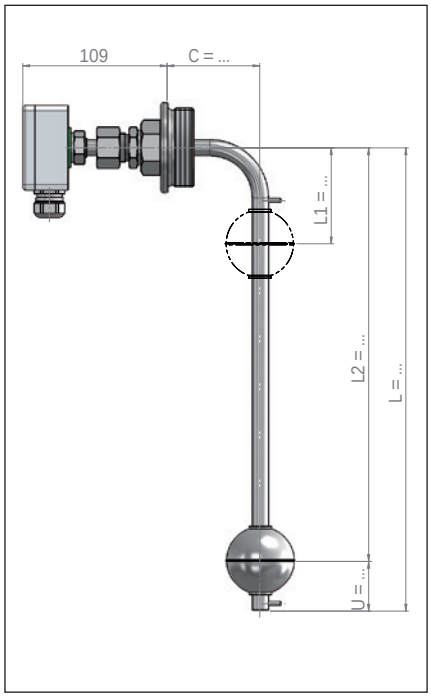

The magnetic float switches are based on a modular design and can be arranged individually.
Type key page 62 - 65

Magnetic Float Switches / Stainless steel - Displacer

Type	ALE/V/FE-25/16/B1-V/..-M../12/V/60/2-1/SVK44/15/A-HH	ALE/V/FE-25/16/B1-V/..-M../12/V/60/2-1/SVK44/15/A-HV
Material quality:	1.4404 / 1.4435 / 1.4571 (316L / 316Ti)	1.4404 / 1.4435 / 1.4571 (316L / 316Ti)
Electrical connection:	ALE Aluminium terminal box	ALE Aluminium terminal box
Process connection:	Flange EN DN 25 / PN 16 / Form B1	Flange EN DN 25 / PN 16 / Form B1
Bypass chamber:	Ø 60.30 x 2.00 mm	Ø 60.30 x 2.00 mm
Centre distance:	≤ 1000 mm	≤ 1000 mm
Float:	SVK44/15/A Ø 44 mm	SVK44/15/A Ø 44 mm
Specific gravity:	≥ 800 kg/m³	≥ 800 kg/m³
Design pressure:	-1 bar ... 16 bar	-1 bar ... 16 bar
Design temperature:	-30°C ... 180°C (optional 250°C)	-30°C ... 180°C (optional 250°C)
Ingress protection class:	IP 65	IP 65
Mounting position:	Vertical +/-30°	Vertical +/-30°
Level switch function		
Function:	Normally open (NO) / S	Normally open (NO) / S
Switching capacity:	230 V / 1.0 A / 100 VA	230 V / 1.0 A / 100 VA
Maximal number of contacts:	4 pieces (5 pieces with ALF terminal box)	4 pieces (5 pieces with ALF terminal box)
Function:	Normally closed (NC) / O	Normally closed (NC) / O
Switching capacity:	230 V / 0.5 A / 40 VA	230 V / 0.5 A / 40 VA
Maximal number of contacts:	4 pieces (5 pieces with ALF terminal box)	4 pieces (5 pieces with ALF terminal box)
Function:	Change over (SPDT) / U	Change over (SPDT) / U
Switching capacity:	230 V / 0.5 A / 40 VA	230 V / 0.5 A / 40 VA
Maximal number of contacts:	3 pieces (4 pieces with ALF terminal box)	3 pieces (4 pieces with ALF terminal box)
Option temperature probe / Page 112		
Temperature probe:	Pt-100 / Pt-1000	Pt-100 / Pt-1000
Norm:	IEC 751 Kl.B	IEC 751 Kl.B
Option temperature switch / Page 112		
Function:	Normally closed (NC) or normally open (NO)	Normally closed (NC) or normally open (NO)
Switching capacity:	Page 112	Page 112
Accuracy / Hysteresis:	Page 112	Page 112
Temperature / Grading:	Page 112	Page 112

Minimum measures

ALE/V/FE-25/16/B1-V/..-M../12/V/60/2-1/SVK44/15/A-HH
L1: ≥ 130 mm
U: 45 mm
Contact distance: ≥ 20 mm
Float distance: ≥ 70 mm

Approvals / Certificates

ABS / ATEX / BV / EAC / GL / LR / PED / SIL1

Minimum measures

ALE/V/FE-25/16/B1-V/..-M../12/V/60/2-1/SVK44/15/A-HV
L1: ≥ 130 mm
U: 45 mm
Contact distance: ≥ 20 mm
Float distance: ≥ 70 mm

Approvals / Certificates

ABS / ATEX / BV / EAC / GL / LR / PED / SIL1

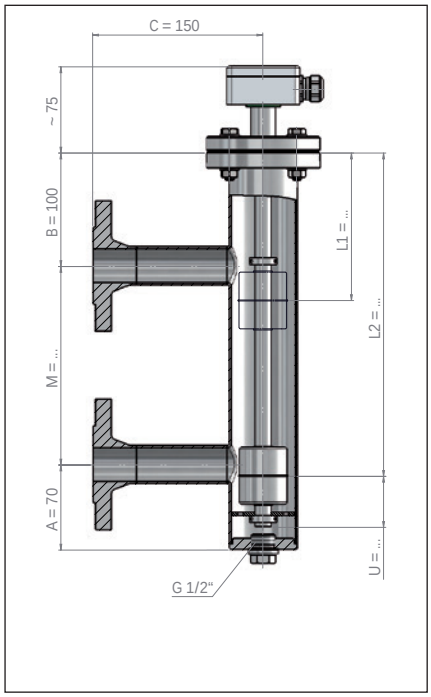

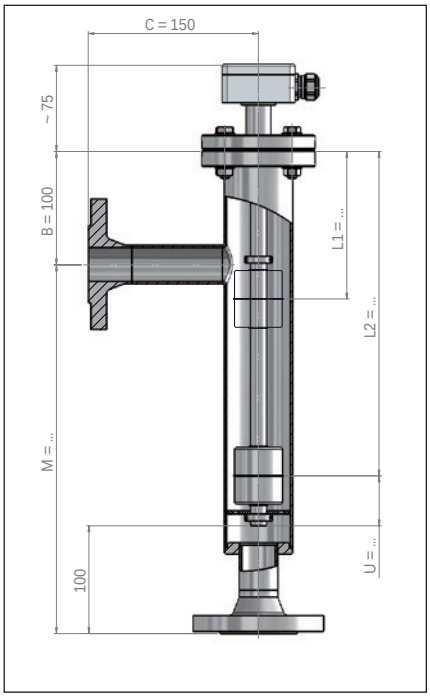

The magnetic float switches are based on a modular design and can be arranged individually.
Type key page 62 - 65

Heinrich Kübler AG
Ruessenstrasse 4 | CH-6340 Baar | Phone +41 (0)41 766 62 62 | Fax +41 (0)41 766 62 63 | E-Mail info@kubler.ch | Internet www.kubler.ch

Type	ASH/ST/ERVE-1/4-V/..-M55/12/AL/64/3.50-1/SB40/15/A-HH	ALE/ST/ERVE-1/4-V/..-M55/12/AL/64/3.50-1/SVK44/15/A-HH
Material quality:	Stainless steel / Aluminium / Buna	Stainless steel / Aluminium
Electrical connection:	Connector Hirschmann DIN 43650	ALE Aluminium terminal box
Process connection:	Cutting ring union / Ø 10 mm	Cutting ring union / Ø 10 mm
Bypass chamber:	Ø 64.00 x 3.50 mm, Aluminium	Ø 64.00 x 3.50 mm, Aluminium
Centre distance:	55 mm	55 mm
Float:	SB40/15/A Ø 40 mm	SVK44/15/A Ø 44 mm
Specific gravity:	≥ 700 kg/m³	≥ 800 kg/m³
Design pressure:	-1 bar ... 6 bar	-1 bar ... 6 bar
Design temperature:	-30°C ... 80°C	-30°C ... 150°C
Ingress protection class:	IP 65	IP 65
Mounting position:	Vertical +/-30°	Vertical +/-30°
Level switch function		
Function:	Normally open (NO) / S	Normally open (NO) / S
Switching capacity:	230 V / 1.0 A / 100 VA	230 V / 1.0 A / 100 VA
Maximal number of contacts:	1 piece	1 piece
Function:	Normally closed (NC) / O	Normally closed (NC) / O
Switching capacity:	230 V / 0.5 A / 40 VA	230 V / 0.5 A / 40 VA
Maximal number of contacts:	1 piece	1 piece
Function:	Change over (SPDT) / U (without temp. switch)	Change over (SPDT) / U
Switching capacity:	230 V / 0.5 A / 40 VA	230 V / 0.5 A / 40 VA
Maximal number of contacts:	1 piece	1 piece
Option temperature probe / Page 112		
Temperature probe:	-	Pt-100 / Pt-1000
Norm:	-	IEC 751 Kl.B
Option temperature switch / Page 112		
Function:	Normally closed (NC) or normally open (NO)	Normally closed (NC) or normally open (NO)
Switching capacity:	Page 112	Page 112
Accuracy / Hysteresis:	Page 112	Page 112
Temperature / Grading:	Page 112	Page 112

Minimum measures

ASH/ST/ERVE-1/4-V/..-M55/12/V/64/3.50-1/SB40/15/A-HH
L1: ≥ 25 mm
U: -
Contact distance: -
Float distance: -

Approvals / Certificates

ABS / ATEX / BV / EAC / GL / LR / PED / SIL1

Minimum measures

ALE/ST/ERVE-1/4-V/..-M55/12/V/64/3.50-1/SVK44/15/A-HH
L1: ≥ 50 mm
U: -
Contact distance: -
Float distance: -

Approvals / Certificates

ABS / ATEX / BV / EAC / GL / LR / PED / SIL1

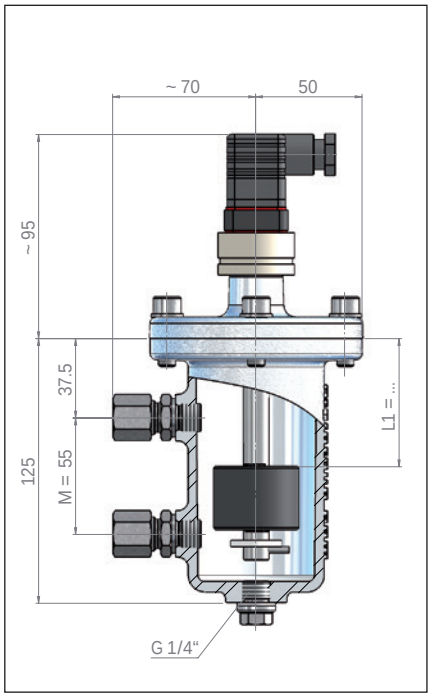

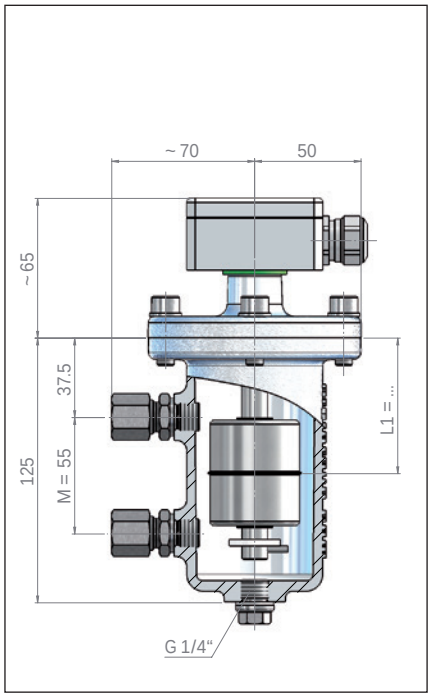

The magnetic float switches are based on a modular design and can be arranged individually.
Type key page 62 - 65

Magnetic Float Switches / Stainless steel - with oval flange

Type	ASH/PA/SO-V/..-L../12-1/SB40/15/A	ASH/V/SO-V/..-L../12-1/SVK44/15/A
Material quality:	Stainless steel / Polyamide / Buna	1.4404 / 1.4435 / 1.4571 (316L / 316Ti)
Electrical connection:	Connector Hirschmann DIN 43650	Connector Hirschmann DIN 43650
Process connection:	Standard oval flange 80 x 50 mm, Polyamide	Standard oval flange 80 x 50 mm
Guide tube:	Ø 12 mm (optional Ø 14 mm)	Ø 12 mm (optional Ø 14 mm)
Length of instrument:	≤ 5000 mm	≤ 5000 mm*
Float:	SB40/15/A Ø 40 mm	SVK44/15/A Ø 44 mm
Specific gravity:	≥ 700 kg/m³	≥ 800 kg/m³
Design pressure:	-0 bar ... 0,5 bar	-1 bar ... 1 bar
Design temperature:	-10°C ... 80°C	-30°C ... 180°C
Ingress protection class:	IP 65	IP 65
Mounting position:	Vertical +/-30°	Vertical +/-30°
Level switch function		
Function:	Normally open (NO) / S	Normally open (NO) / S
Switching capacity:	230 V / 1.0 A / 100 VA	230 V / 1.0 A / 100 VA
Maximal number of contacts:	2 pieces	2 pieces
Function:	Normally closed (NC) / O	Normally closed (NC) / O
Switching capacity:	230 V / 0.5 A / 40 VA	230 V / 0.5 A / 40 VA
Maximal number of contacts:	2 pieces	2 pieces
Function:	Change over (SPDT) / U (without temp. switch)	Change over (SPDT) / U (without temp. switch)
Switching capacity:	230 V / 0.5 A / 40 VA	230 V / 0.5 A / 40 VA
Maximal number of contacts:	1 piece	1 piece
Option temperature probe / Page 112		
Temperature probe:	-	-
Norm:	-	-
Option temperature switch / Page 112		
Function:	Normally closed (NC) or normally open (NO)	Normally closed (NC) or normally open (NO)
Switching capacity:	Page 112	Page 112
Accuracy / Hysteresis:	Page 112	Page 112
Temperature / Grading:	Page 112	Page 112

Minimum measures

ASH/PA/SO-V/..-L../12-1/SB40/15/A
L1: ≥ 50 mm
U: 50 mm
Contact distance: ≥ 20 mm
Float distance: ≥ 45 mm

Approvals / Certificates

BV / LR / PED / SIL1

Minimum measures

ASH/V/SO-V/..-L../12-1/SVK44/15/A
L1: ≥ 35 mm
U: 45 mm
Contact distance: ≥ 20 mm
Float distance: ≥ 70 mm

Approvals / Certificates

ABS / ATEX / BV / EAC / GL / LR / PED / SIL1

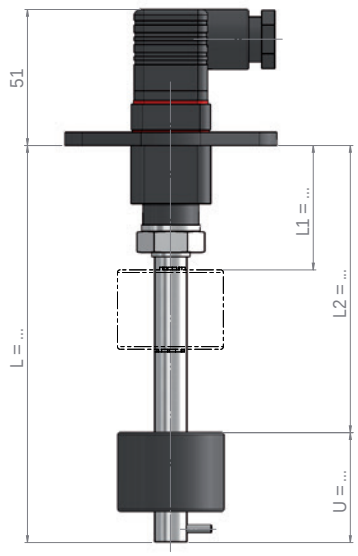

Screw-hole circle Ø 55 mm, 2 Bores Ø 6,4 mm

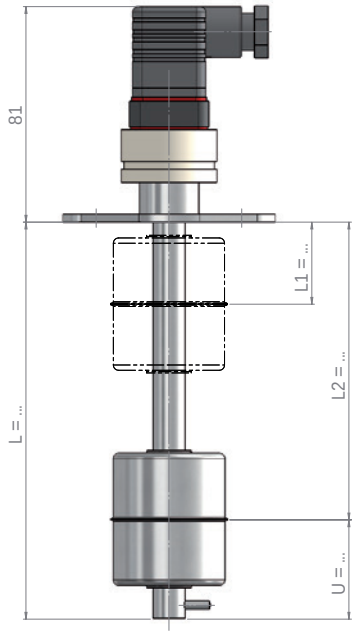

Screw-hole circle Ø 55 mm, 2 Bores Ø 6,4 mm

The magnetic float switches are based on a modular design and can be arranged individually.
Type key page 62 - 65

* ATEX-design = guide tube length / per float ≥ 4000 mm by calculation

Heinrich Kübler AG
Ruessenstrasse 4 | CH-6340 Baar | Phone +41 (0)41 766 62 62 | Fax +41 (0)41 766 62 63 | E-Mail info@kubler.ch | Internet www.kubler.ch

Type	K68/V/E-3/8-V/..-L../16-1/SV3A80/23/V-../SIL-3A	AVA/V/BKN-..-V/..-L../16-1/SV3A80/23/V-3A
Material quality:	1.4404 / 1.4435 / 1.4571 (316L / 316Ti)**	1.4404 / 1.4435 / 1.4571 (316L / 316Ti)**
Electrical connection:	Silicon connection cable	Stainless steel terminal box
Process connection:	G 3/8“	Aseptic blind cone acc. to DIN 11851 w. groove nut
Guide tube:	Ø 16 mm	Ø 16 mm
Length of instrument:	≤ 5000 mm*	≤ 5000 mm*
Float:	SV3A80/23/V Ø 80 mm	SV3A80/23/V Ø 80 mm
Specific gravity:	≥ 750 kg/m³	≥ 750 kg/m³
Design pressure:	-1 bar ... 40 bar	-1 bar ... 6 bar (depending on temperature)
Design temperature:	-30°C ... 180°C	-30°C ... 180°C (optional 250°C)
Ingress protection class:	IP 68	IP 67
Mounting position:	Vertical +/-30°	Vertical +/-30°
Level switch function		
Function:	Normally open (NO) / S	Normally open (NO) / S
Switching capacity:	230 V / 1.0 A / 100 VA	230 V / 1.0 A / 100 VA
Maximal number of contacts:	5 pieces	5 pieces
Function:	Normally closed (NC) / O	Normally closed (NC) / O
Switching capacity:	230 V / 0.5 A / 40 VA	230 V / 0.5 A / 40 VA
Maximal number of contacts:	5 pieces	5 pieces
Function:	Change over (SPDT) / U	Change over (SPDT) / U
Switching capacity:	230 V / 0.5 A / 40 VA	230 V / 0.5 A / 40 VA
Maximal number of contacts:	4 pieces	4 pieces
Option temperature probe / Page 112		
Temperature probe:	Pt-100 / Pt-1000	Pt-100 / Pt-1000
Norm:	IEC 751 Kl.B	IEC 751 Kl.B
Option temperature switch / Page 112		
Function:	Normally closed (NC) or normally open (NO)	Normally closed (NC) or normally open (NO)
Switching capacity:	Page 112	Page 112
Accuracy / Hysteresis:	Page 112	Page 112
Temperature / Grading:	Page 112	Page 112

Minimum measures

K68/V/E-3/8-V/..-L../16-1/SV3A80/23/V-../SIL-3A
L1: ≥ 50 mm
U: 55 mm
Contact distance: ≥ 20 mm
Float distance: ≥ 100 mm

Approvals / Certificates

3A / ATEX / EAC / PED / SIL1 / WHG

Minimum measures

AVA/V/BKN-..-V/..-L../16-1/SV3A80/23/V-3A
L1: ≥ 50 mm
U: 55 mm
Contact distance: ≥ 20 mm
Float distance: ≥ 100 mm

Approvals / Certificates

3A / ATEX / EAC / LR / PED / SIL1 / WHG

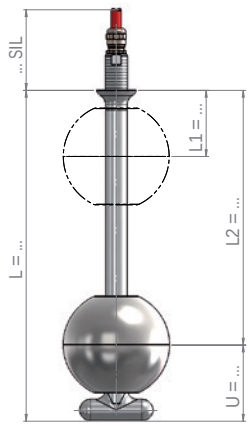

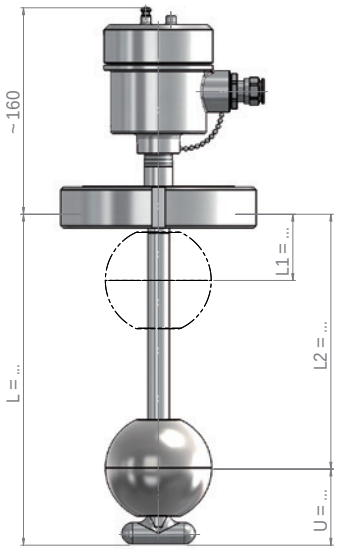

The magnetic float switches are based on a modular design and can be arranged individually.
Type key page 62 - 65

* ATEX-design = guide tube length / per float ≥ 4000 mm by calculation

** = Ra ≤ 0.4µm for all wetted parts

Magnetic Float Switches / Stainless steel - with hub float

Type	ALE/V/R-2-V/..-L../12-1/ZVSS50/120-HFF	ALE/V/R-2-V/..-L..-1/ZVSS50/120-HSF
Material quality:	1.4404 / 1.4435 / 1.4571 (316L / 316Ti)	1.4404 / 1.4435 / 1.4571 (316L / 316Ti)
Electrical connection:	ALE Aluminium terminal box	ALE Aluminium terminal box
Process connection:	G 2“	G 2“
Float pipe:	Ø 12 mm	-
Length of guide tube:	≤ 500 mm	≤ 3000 mm
Float:	ZVSS50/120 Ø 50 mm	ZVSS50/120 Ø 50 mm
Specific gravity:	≥ 800 kg/m³	≥ 800 kg/m³
Design pressure:	-1 bar ... 16 bar	-1 bar ... 16 bar
Design temperature:	-30°C ... 180°C (optional 250°C)	-30°C ... 180°C (optional 250°C)
Ingress protection class:	IP 65	IP 65
Mounting position:	Vertical +/-30°	Vertical +/-30°
Level switch function		
Function:	Normally open (NO) / S	Normally open (NO) / S
Switching capacity:	230 V / 1.0 A / 100 VA	230 V / 1.0 A / 100 VA
Maximal number of contacts:	1 piece	1 piece
Function:	Normally closed (NC) / O	Normally closed (NC) / O
Switching capacity:	230 V / 0.5 A / 40 VA	230 V / 0.5 A / 40 VA
Maximal number of contacts:	1 piece	1 piece
Function:	Change over (SPDT) / U	Change over (SPDT) / U
Switching capacity:	230 V / 0.5 A / 40 VA	230 V / 0.5 A / 40 VA
Maximal number of contacts:	1 piece	1 piece
Option temperature probe / Page 112		
Temperature probe:	-	-
Norm:	-	-
Option temperature switch / Page 112		
Function:	-	-
Switching capacity:	-	-
Accuracy / Hysteresis:	-	-
Temperature / Grading:	-	-

Minimum measures

ALE/V/R-2-V/..-L../12-1/ZVSS50/120-HFF
L1: -
U: -
Contact distance: -
Float distance: -

Approvals / Certificates

ATEX / EAC / PED / SIL1

Minimum measures

ALE/V/R-2-V/..-L..-1/ZVSS50/120-HSF
L1: -
U: -
Contact distance: -
Float distance: -

Approvals / Certificates

ATEX / EAC / PED / SIL1

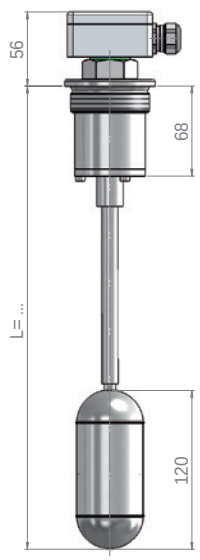

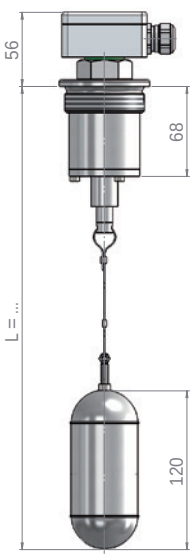

The magnetic float switches are based on a modular design and can be arranged individually.
Type key page 62 - 65

Heinrich Kübler AG
Ruessenstrasse 4 | CH-6340 Baar | Phone +41 (0)41 766 62 62 | Fax +41 (0)41 766 62 63 | E-Mail info@kubler.ch | Internet www.kubler.ch

Type	ALE/V/R-1½-V/..-L../12-1/ZVSS42/100-PSS	ALE/V/R-1½-V/..-L../12-PSP
Material quality:	1.4404 / 1.4435 / 1.4571 (316L / 316Ti)	1.4404 / 1.4435 / 1.4571 (316L / 316Ti)
Electrical connection:	ALE Aluminium terminal box	ALE Aluminium terminal box
Process connection:	G 1½“	G 1½“
Float pipe:	Ø 12 mm	Ø 12 mm
Length of instrument:	≤ 3000 mm	≤ 3000 mm
Float:	ZVSS42/100 Ø 42 mm	Paddle 100 x 40 mm
Specific gravity:	≥ 1000 kg/m³	-
Design pressure:	-1 bar ... 3 bar	-1 bar ... 3 bar
Design temperature:	-30°C ... 180°C (optional 250°C)	-30°C ... 180°C (optional 250°C)
Ingress protection class:	IP 65	IP 65
Mounting position:	Vertical +/-30°	Vertical +/-30°
Level switch function		
Function:	Normally open (NO) / S	Normally open (NO) / S
Switching capacity:	230 V / 1.0 A / 100 VA	230 V / 1.0 A / 100 VA
Maximal number of contacts:	1 piece	1 piece
Function:	Normally closed (NC) / O	Normally closed (NC) / O
Switching capacity:	230 V / 0.5 A / 40 VA	230 V / 0.5 A / 40 VA
Maximal number of contacts:	1 piece	1 piece
Function:	Change over (SPDT) / U	Change over (SPDT) / U
Switching capacity:	230 V / 0.5 A / 40 VA	230 V / 0.5 A / 40 VA
Maximal number of contacts:	1 piece	1 piece
Option temperature probe / Page 112		
Temperature probe:	-	-
Norm:	-	-
Option temperature switch / Page 112		
Function:	-	-
Switching capacity:	-	-
Accuracy / Hysteresis:	-	-
Temperature / Grading:	-	-

Minimum measures

ALE/V/R-1½-V/..-L../12-1/ZVSS42/100-PSS
L‘: ≥ 150 mm
U: -
Contact distance: -
Float distance: -

Approvals / Certificates

PED / SIL1

Minimum measures

ALE/V/R-1½-V/..-L../12-PSP
L‘: ≥ 150 mm
U: -
Contact distance: -
Float distance: -

Approvals / Certificates

PED / SIL1

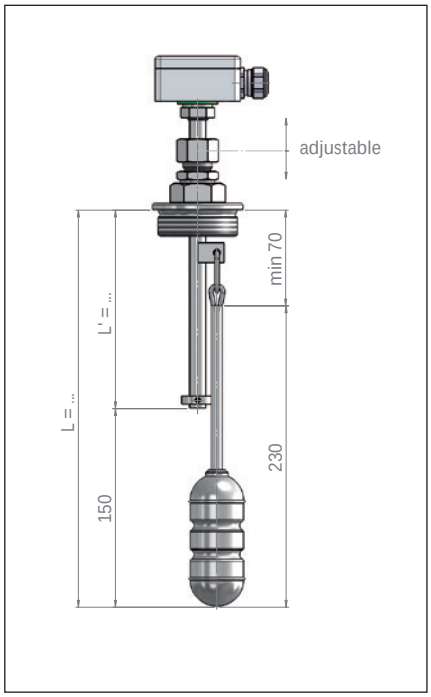

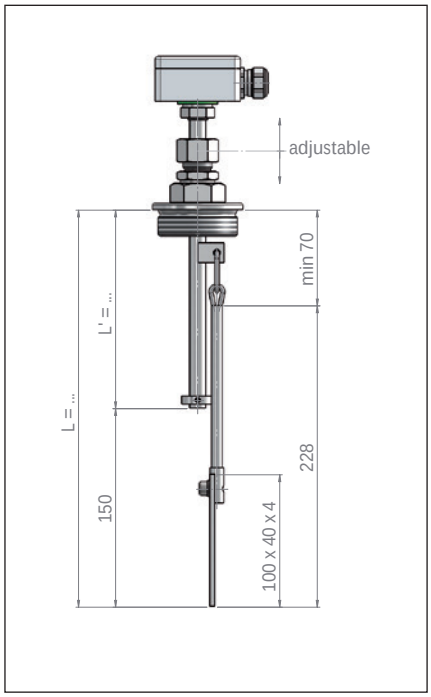

The magnetic float switches are based on a modular design and can be arranged individually.
Type key page 62 - 65

Electrical connection

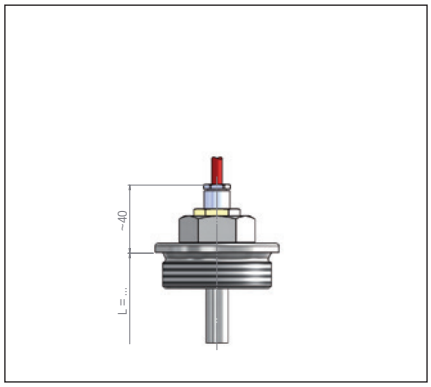

Connection type: K
Material quality: According as cable type
Cable entry: PG or metric
Ingress protection class: IP 55 (optional IP 68)
Ambient temperature: -40°C ... 200°C

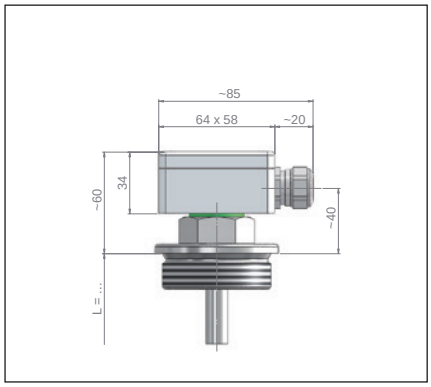

Connection type: ALE
Material quality: Aluminium coated RAL 7001
Cable entry: M20 x 1.5
Ingress protection class: IP 65
Ambient temperature: -40°C ... 100°C

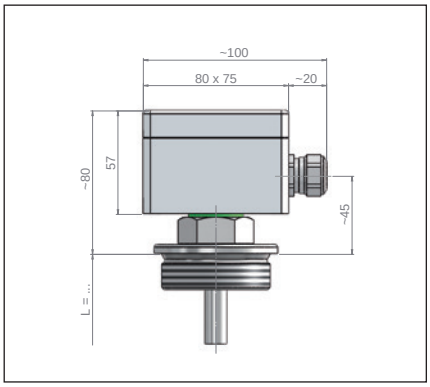

Connection type: ALF
Material quality: Aluminium coated RAL 7001
Cable entry: M20 x 1.5
Ingress protection class: IP 65
Ambient temperature: -40°C ... 100°C

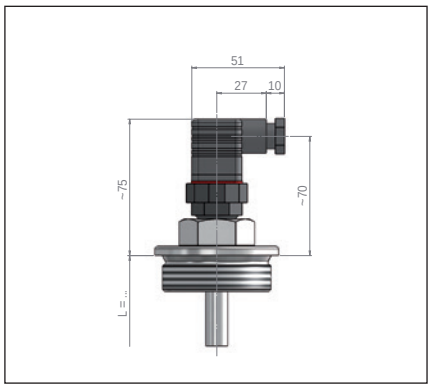

Connection type: ASH
Material quality: PA
Cable entry: M16
Ingress protection class: IP 65
Ambient temperature: -40°C ... 125°C

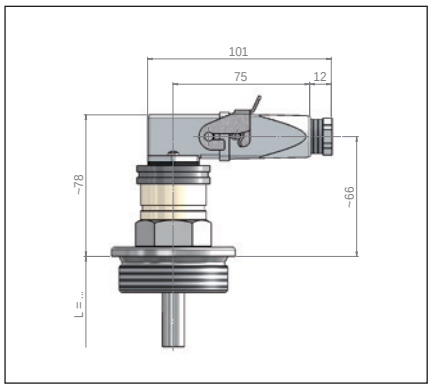

Connection type: ASHAB / ASHBB (Aluminium)
Material quality: Plastic / Aluminium
Cable entry: M20
Ingress protection class: IP 65
Ambient temperature: -10°C ... 80°C

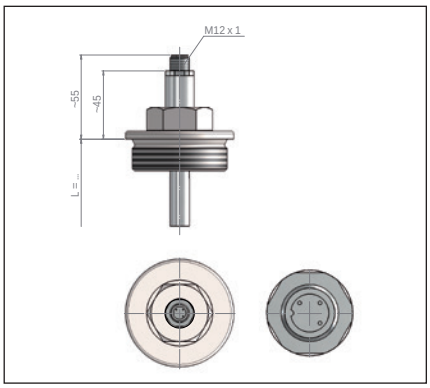

Connection type: ASMA / ASMB (8-pins)
Material quality: Brass / PA
Cable entry: PG9
Ingress protection class: IP 67
Ambient temperature: -25°C ... 90°C

Approvals / Certificates

Further electrical connections page 110 - 111
Further process connection according to type key page 62
Further floats page 106 - 109

The magnetic float switches are based on a modular design and can be arranged individually.
Type key page 62 - 65

Heinrich Kübler AG
Ruessenstrasse 4 | CH-6340 Baar | Phone +41 (0)41 766 62 62 | Fax +41 (0)41 766 62 63 | E-Mail info@kubler.ch | Internet www.kubler.ch

Type	K/ME/E-1/8-ME/..-L../8-1/SVK27/10/A-../PVC	K/ME/E-1/8-ME/..-L../8-1/SV29/9/A-../SIL
Material quality:	Brass (Float Stainless steel)	Brass (Float Stainless steel)
Electrical connection:	PVC connection cable	Silicon connection cable
Process connection:	G 1/8“	G 1/8“
Guide tube:	Ø 8 mm	Ø 8 mm
Length of instrument:	≤ 1000 mm	≤ 1000 mm
Float:	SVK27/10/A Ø 27 mm	SV29/9/A Ø 29 mm
Specific gravity:	≥ 800 kg/m³	≥ 900 kg/m³
Design pressure:	-1 bar ... 6 bar	-1 bar ... 6 bar
Design temperature:	-10°C ... 80°C	-10°C ... 150°C
Ingress protection class:	IP 55	IP 55
Mounting position:	Vertical +/-30°	Vertical +/-30°
Level switch function		
Function:	Normally open (NO) / S	Normally open (NO) / S
Switching capacity:	150V / 0.5A / 10VA	150V / 0.5A / 10VA
Maximal number of contacts:	3 pieces	3 pieces
Function:	Normally closed (NC) / O	Normally closed (NC) / O
Switching capacity:	150V / 0.5A / 10VA	150V / 0.5A / 10VA
Maximal number of contacts:	3 pieces	3 pieces
Function:	Change over (SPDT) / U	Change over (SPDT) / U
Switching capacity:	150V / 0.5A / 10VA	150V / 0.5A / 10VA
Maximal number of contacts:	2 pieces	2 pieces
Option temperature probe / Page 112		
Temperature probe:	Pt-100 / Pt-1000	Pt-100 / Pt-1000
Norm:	IEC 751 Kl.B	IEC 751 Kl.B
Option temperature switch / Page 112		
Function:	-	-
Switching capacity:	-	-
Accuracy / Hysteresis:	-	-
Temperature / Grading:	-	-

Minimum measures

K/ME/E-1/8-ME/..-L../8-1/SVK27/10/A-../PVC
L1: ≥ 30 mm
U: 30 mm
Contact distance: ≥ 20 mm
Float distance: ≥ 45 mm

Approvals / Certificates

PED / SIL1

Minimum measures

K/ME/E-1/8-ME/..-L../8-1/SV29/9/A-../SIL
L1: ≥ 35 mm
U: 30 mm
Contact distance: ≥ 20 mm
Float distance: ≥ 45 mm

Approvals / Certificates

PED / SIL1

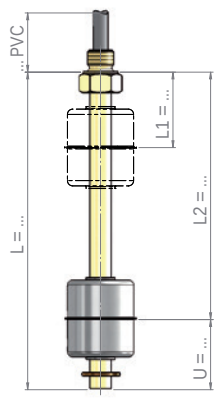

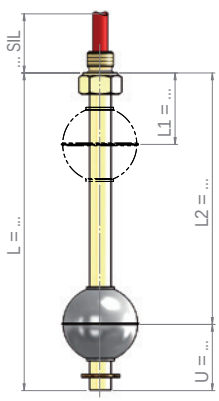

The magnetic float switches are based on a modular design and can be arranged individually.
Type key page 62 - 65

Magnetic Float Switches / Brass

Type	K/ME/E-3/8-ME/..-L../12-1/SVK44/15/A-../PVC	K/ME/E-3/8-ME/..-L../12-1/SV52/15/A-../SIL
Material quality:	Brass (Float Stainless steel)	Brass (Float Stainless steel)
Electrical connection:	PVC connection cable	Silicon connection cable
Process connection:	G 3/8“	G 3/8“
Guide tube:	Ø 12 mm (optional Ø 14 mm)	Ø 12 mm (optional Ø 14 mm)
Length of instrument:	≤ 5000 mm	≤ 5000 mm
Float:	SVK44/15/A Ø 44 mm	SV52/15/A Ø 52 mm
Specific gravity:	≥ 800 kg/m³	≥ 680 kg/m³
Design pressure:	-1 bar ... 16 bar	-1 bar ... 16 bar
Design temperature:	-10°C ... 80°C	-10°C ... 150°C
Ingress protection class:	IP 55 (optional IP 68)	IP 55 (optional IP 68)
Mounting position:	Vertical +/-30°	Vertical +/-30°
Level switch function		
Function:	Normally open (NO) / S	Normally open (NO) / S
Switching capacity:	230 V / 1.0 A / 100 VA	230 V / 1.0 A / 100 VA
Maximal number of contacts:	5 pieces	5 pieces
Function:	Normally closed (NC) / O	Normally closed (NC) / O
Switching capacity:	230 V / 0.5 A / 40 VA	230 V / 0.5 A / 40 VA
Maximal number of contacts:	5 pieces	5 pieces
Function:	Change over (SPDT) / U	Change over (SPDT) / U
Switching capacity:	230 V / 0.5 A / 40 VA	230 V / 0.5 A / 40 VA
Maximal number of contacts:	4 pieces	4 pieces
Option temperature probe / Page 112		
Temperature probe:	Pt-100 / Pt-1000	Pt-100 / Pt-1000
Norm:	IEC 751 Kl.B	IEC 751 Kl.B
Option temperature switch / Page 112		
Function:	Normally closed (NC) or normally open (NO)	Normally closed (NC) or normally open (NO)
Switching capacity:	Page 112	Page 112
Accuracy / Hysteresis:	Page 112	Page 112
Temperature / Grading:	Page 112	Page 112

Minimum measures

K/ME/E-3/8-ME/..-L../12-1/SVK44/15/A-../PVC
L1: ≥ 50 mm
U: 45 mm
Contact distance: ≥ 20 mm
Float distance: ≥ 70 mm

Approvals / Certificates

ABS / BV / GL / LR / PED / SIL1

Minimum measures

K/ME/E-3/8-ME/..-L../12-1/SV52/15/A-../SIL
L1: ≥ 55 mm
U: 45 mm
Contact distance: ≥ 20 mm
Float distance: ≥ 70 mm

Approvals / Certificates

ABS / BV / GL / LR / PED / SIL1

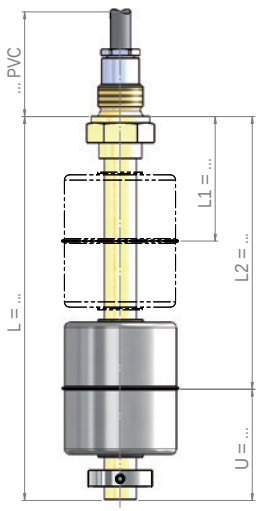

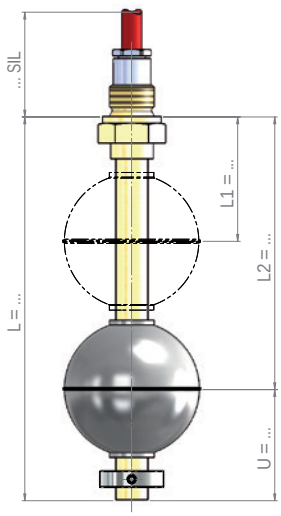

The magnetic float switches are based on a modular design and can be arranged individually.
Type key page 62 - 65

Heinrich Kübler AG
Ruessenstrasse 4 | CH-6340 Baar | Phone +41 (0)41 766 62 62 | Fax +41 (0)41 766 62 63 | E-Mail info@kubler.ch | Internet www.kubler.ch

Type	ALE/ME/R-1½-ME/..-L../12-1/SVK44/15/A	ALE/ME/R-2-ME/..-L../12-1/SV52/15/A
Material quality:	Brass (Float Stainless steel)	Brass (Float Stainless steel)
Electrical connection:	ALE Aluminium terminal box	ALE Aluminium terminal box
Process connection:	G 1½“	G 2“
Guide tube:	Ø 12 mm	Ø 12 mm
Length of instrument:	≤ 5000 mm	≤ 5000 mm
Float:	SVK44/15/A Ø 44 mm	SV52/15/A Ø 52 mm
Specific gravity:	≥ 800 kg/m³	≥ 680 kg/m³
Design pressure:	-1 bar ... 16 bar	-1 bar ... 16 bar
Design temperature:	-10°C ... 150°C	-10°C ... 150°C
Ingress protection class:	IP 65	IP 65
Mounting position:	Vertical +/-30°	Vertical +/-30°
Level switch function		
Function:	Normally open (NO) / S	Normally open (NO) / S
Switching capacity:	230 V / 1.0 A / 100 VA	230 V / 1.0 A / 100 VA
Maximal number of contacts:	4 pieces (5 pieces with ALF terminal box)	4 pieces (5 pieces with ALF terminal box)
Function:	Normally closed (NC) / O	Normally closed (NC) / O
Switching capacity:	230 V / 0.5 A / 40 VA	230 V / 0.5 A / 40 VA
Maximal number of contacts:	4 pieces (5 pieces with ALF terminal box)	4 pieces (5 pieces with ALF terminal box)
Function:	Change over (SPDT) / U	Change over (SPDT) / U
Switching capacity:	230 V / 0.5 A / 40 VA	230 V / 0.5 A / 40 VA
Maximal number of contacts:	3 pieces (4 pieces with ALF terminal box)	3 pieces (4 pieces with ALF terminal box)
Option temperature probe / Page 112		
Temperature probe:	Pt-100 / Pt-1000	Pt-100 / Pt-1000
Norm:	IEC 751 Kl.B	IEC 751 Kl.B
Option temperature switch / Page 112		
Function:	Normally closed (NC) or normally open (NO)	Normally closed (NC) or normally open (NO)
Switching capacity:	Page 112	Page 112
Accuracy / Hysteresis:	Page 112	Page 112
Temperature / Grading:	Page 112	Page 112

Minimum measures

ALE/ME/R-1½-ME/..-L../12-1/SVK44/15/A
L1: ≥ 65 mm
U: 45 mm
Contact distance: ≥ 20 mm
Float distance: ≥ 70 mm

Approvals / Certificates

ABS / BV / GL / LR / PED / SIL1

Minimum measures

ALE/ME/R-2-ME/..-L../12-1/SV52/15/A
L1: ≥ 70 mm
U: 45 mm
Contact distance: ≥ 20 mm
Float distance: ≥ 70 mm

Approvals / Certificates

ABS / BV / GL / LR / PED / SIL1

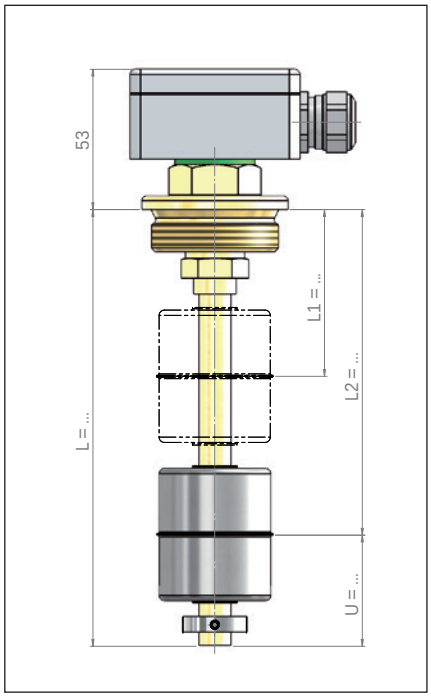

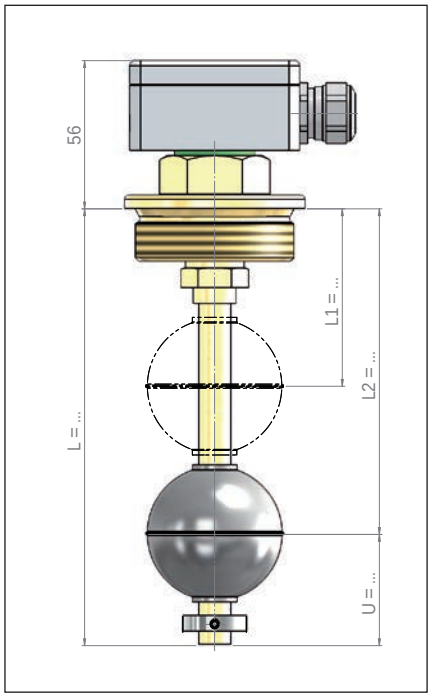

The magnetic float switches are based on a modular design and can be arranged individually.
Type key page 62 - 65

Magnetic Float Switches / Polyamide - flexible

Electrical connection

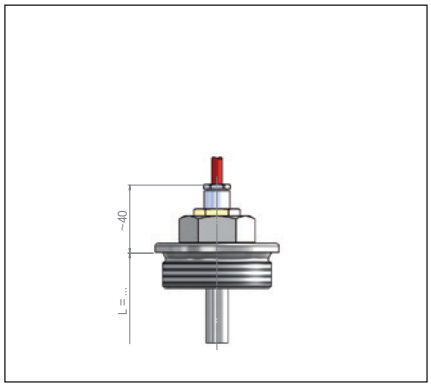

Connection type: K
Material quality: According as cable type
Cable entry: PG or metric
Ingress protection class: IP 55 (optional IP 68)
Ambient temperature: -40°C ... 200°C

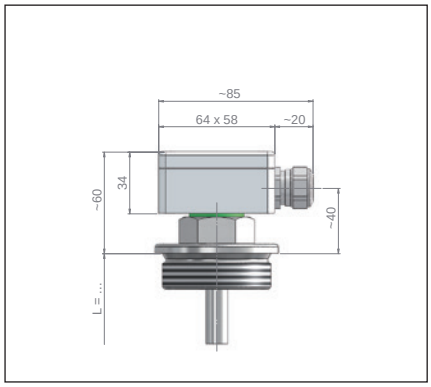

Connection type: ALE
Material quality: Aluminium coated RAL 7001
Cable entry: M20 x 1.5
Ingress protection class: IP 65
Ambient temperature: -40°C ... 100°C

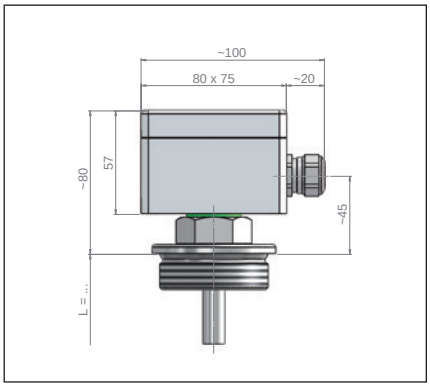

Connection type: ALF
Material quality: Aluminium coated RAL 7001
Cable entry: M20 x 1.5
Ingress protection class: IP 65
Ambient temperature: -40°C ... 100°C

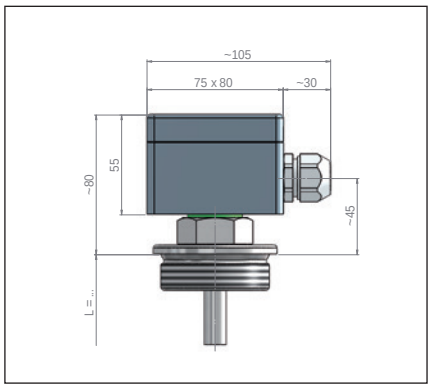

Connection type: APA / APB (Ex)
Material quality: Polyester
Cable entry: M20 x 1.5
Ingress protection class: IP 65
Ambient temperature: -10°C ... 100°C

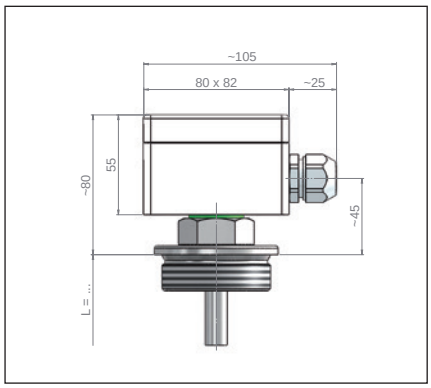

Connection type: ABA
Material quality: ABS
Cable entry: M20 x 1.5
Ingress protection class: IP 65
Ambient temperature: -10°C ... 80°C

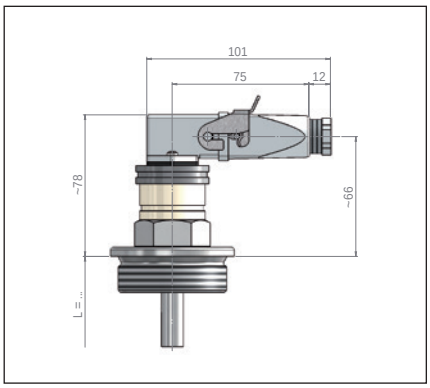

Connection type: ASHAB / ASHBB (Aluminium)
Material quality: Plastic / Aluminium
Cable entry: M20
Ingress protection class: IP 65
Ambient temperature: -10°C ... 80°C

Approvals / Certificates

SIL

Further electrical connections page 110 - 111
Further process connection according to type key page 62
Further floats page 106 - 109

The magnetic float switches are based on a modular design and can be arranged individually.
Type key page 62 - 65

Heinrich Kübler AG
Ruessenstrasse 4 | CH-6340 Baar | Phone +41 (0)41 766 62 62 | Fax +41 (0)41 766 62 63 | E-Mail info@kubler.ch | Internet www.kubler.ch

Type	ALE/ME/R-1½-PA/..-L../12-1/SVK44/15/A-FG	ALE/ME/R-2-PA/..-L../12-1/SV52/15/A-FG
Material quality:	Polyamide / Brass / Stainless steel	Polyamide / Brass / Stainless steel
Electrical connection:	ALE Aluminium terminal box	ALE Aluminium terminal box
Process connection:	G 1½“	G 2“
Guide tube:	Ø 12 mm	Ø 12 mm
Length of instrument:	≤ 5000 mm	≤ 5000 mm
Float:	SVK44/15/A Ø 44 mm	SV52/15/A Ø 52 mm
Specific gravity:	≥ 800 kg/m³	≥ 680 kg/m³
Design pressure:	-1 bar ... 1 bar	-1 bar ... 1 bar
Design temperature:	-10°C ... 80°C	-10°C ... 80°C
Ingress protection class:	IP 65	IP 65
Mounting position:	Vertical +/-30°	Vertical +/-30°
Level switch function		
Function:	Normally open (NO) / S	Normally open (NO) / S
Switching capacity:	230 V / 1.0 A / 100 VA	230 V / 1.0 A / 100 VA
Maximal number of contacts:	4 pieces (5 pieces with ALF terminal box)	4 pieces (5 pieces with ALF terminal box)
Function:	Normally closed (NC) / O	Normally closed (NC) / O
Switching capacity:	230 V / 0.5 A / 40 VA	230 V / 0.5 A / 40 VA
Maximal number of contacts:	4 pieces (5 pieces with ALF terminal box)	4 pieces (5 pieces with ALF terminal box)
Function:	Change over (SPDT) / U	Change over (SPDT) / U
Switching capacity:	230 V / 0.5 A / 40 VA	230 V / 0.5 A / 40 VA
Maximal number of contacts:	3 pieces (4 pieces with ALF terminal box)	3 pieces (4 pieces with ALF terminal box)
Option temperature probe / Page 112		
Temperature probe:	Pt-100 / Pt-1000	Pt-100 / Pt-1000
Norm:	IEC 751 Kl.B	IEC 751 Kl.B
Option temperature switch / Page 112		
Function:	Normally closed (NC) or normally open (NO)	Normally closed (NC) or normally open (NO)
Switching capacity:	Page 112	Page 112
Accuracy / Hysteresis:	Page 112	Page 112
Temperature / Grading:	Page 112	Page 112

Minimum measures

ALE/ME/R-1½-PA/..-L../12-1/SVK44/15/A-FG
L1: ≥ 70 mm
U: 45 mm
Contact distance: ≥ 20 mm
Float distance: ≥ 70 mm

Approvals / Certificates

SIL

Minimum measures

ALE/ME/R-2-PA/..-L../12-1/SV52/15/A-FG
L1: ≥ 70 mm
U: 45 mm
Contact distance: ≥ 20 mm
Float distance: ≥ 70 mm

Approvals / Certificates

SIL

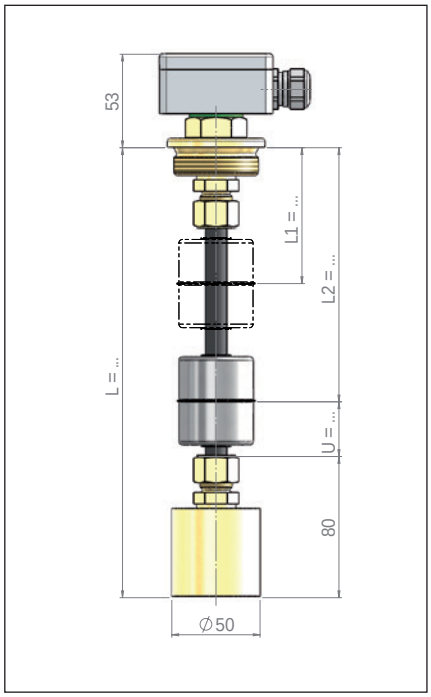

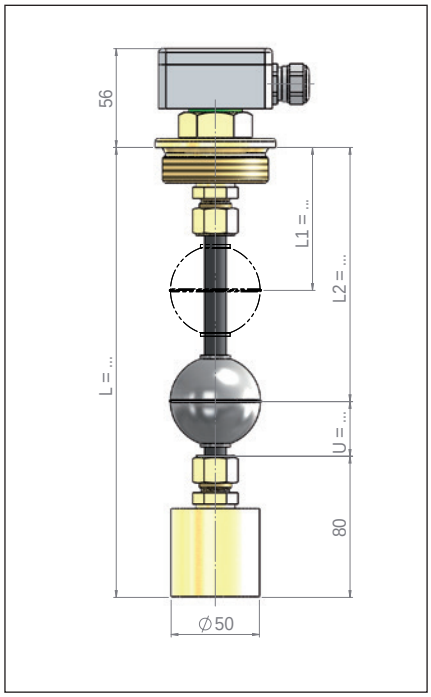

The magnetic float switches are based on a modular design and can be arranged individually.
Type key page 62 - 65

Magnetic Float Switches / with test function

Electrical connection

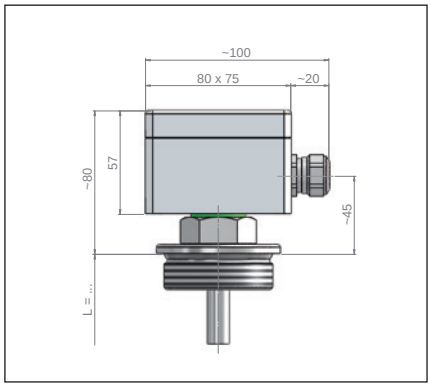

Connection type: ALF
Material quality: Aluminium coated RAL 7001
Cable entry: M20 x 1.5
Ingress protection class: IP 65
Ambient temperature: -40°C ... 100°C

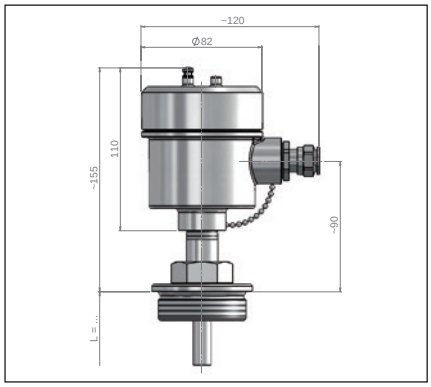

Connection type: AVA / AVDA (Exd)
Material quality: Stainless steel A4 (SS316)
Cable entry: M20 x 1.5
Ingress protection class: IP 67 / (Exd / IP 68)
Ambient temperature: -40°C ... 85°C

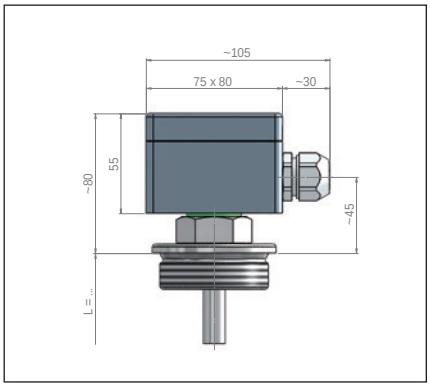

Connection type: APA
Material quality: Polyester
Cable entry: M20 x 1.5
Ingress protection class: IP 65
Ambient temperature: -10°C ... 100°C

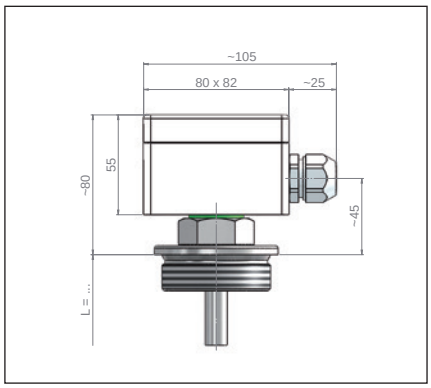

Connection type: ABA
Material quality: ABS
Cable entry: M20 x 1.5
Ingress protection class: IP 65
Ambient temperature: -10°C ... 80°C

Approvals / Certificates

ATEX*

II 1/2G Ex c ia IIC T6 - T3 bzw. T4 Ga/Gb	II 1/2G Ex c ia IIC T6 - T3 Ga/Gb II 2D Ex c tb IIIC T80°C - T190°C Db IP6X		
Liquid temperature Exia max. 180°C / Exd max. 120°C			
Type of protection intrinsic safety Ex ia IIC switch or temperature switch	I_i ≤ 100 mA		
Type of protection intrinsic safety Ex ia IIC temperature probe	U_i ≤ 28 V	I_i ≤ 100 mA	P_i ≤ 700 mW
Type of protection intrinsic safety Ex ia IIC with option /N (NAMUR EN 60947)	U_i ≤ 15 VDC	I_i ≤ 60 mA	

Further electrical connections page 110 - 111
Further process connection according to type key page 62
Further floats page 106 - 109

The magnetic float switches are based on a modular design and can be arranged individually.
Type key page 62 - 65

* = The approval is dependent on the equipment combination

Heinrich Kübler AG
Ruessenstrasse 4 | CH-6340 Baar | Phone +41 (0)41 766 62 62 | Fax +41 (0)41 766 62 63 | E-Mail info@kubler.ch | Internet www.kubler.ch

Type	AVA/V/FE-80/16/B1-V/..-L../18-1/SV72/24/V-NT	ABA/ME/R-1½-ME/..-L../14-1/SVK44/15/A-NT
Material quality:	1.4404 / 1.4435 / 1.4571 (316L / 316Ti)	Brass (Float Stainless steel)
Electrical connection:	AVA Stainless steel terminal box	ABA ABS terminal box
Process connection:	Flange EN DN 80 / PN 16 / Form B1	G 1½“
Guide tube:	Ø 18 mm	Ø 14 mm
Length of instrument:	≤ 6000 mm	≤ 5000 mm
Float:	SV72/24/V Ø 72 mm	SVK44/15/A Ø 44 mm
Specific gravity:	≥ 620 kg/m³	≥ 800 kg/m³
Design pressure:	-1 bar ... 16 bar (depending on temperature)	-1 bar ... 16 bar
Design temperature:	-30°C ... 180°C	-10°C ... 100°C
Ingress protection class:	IP 67	IP 65
Mounting position:	Vertical +/-30°	Vertical +/-30°
Level switch function		
Function:	Normally open (NO) / S	Normally open (NO) / S
Switching capacity:	230 V / 1.0 A / 100 VA	230 V / 1.0 A / 100 VA
Maximal number of contacts:	4 pieces	4 pieces
Function:	Normally closed (NC) / O	Normally closed (NC) / O
Switching capacity:	230 V / 0.5 A / 40 VA	230 V / 0.5 A / 40 VA
Maximal number of contacts:	4 pieces	4 pieces
Function:	Change over (SPDT) / U	Change over (SPDT) / U
Switching capacity:	230 V / 0.5 A / 40 VA	230 V / 0.5 A / 40 VA
Maximal number of contacts:	3 pieces	3 pieces
Option temperature probe / Page 112		
Temperature probe:	Pt-100 / Pt-1000	Pt-100 / Pt-1000
Norm:	IEC 751 Kl.B	IEC 751 Kl.B
Option temperature switch / Page 112		
Function:	Normally closed (NC) or normally open (NO)	Normally closed (NC) or normally open (NO)
Switching capacity:	Page 112	Page 112
Accuracy / Hysteresis:	Page 112	Page 112
Temperature / Grading:	Page 112	Page 112

Minimum measures

AVA/V/FE-80/16/B1-V/..-L../18-1/SV72/24/V-NT
L1: ≥ 60 mm
U: 60 mm
Contact distance: ≥ 90 mm
Float distance: ≥ 90 mm
each switching point 1 float

Approvals / Certificates

ABS / ATEX / BV / EAC / GL / PED / SIL1 / WHG

Minimum measures

ABA/ME/R-1½-ME/..-L../14-1/SVK44/15/A-NT
L1: ≥ 65 mm
U: 45 mm
Contact distance: ≥ 70 mm
Float distance: ≥ 70 mm
each switching point 1 float

Approvals / Certificates

PED / SIL1

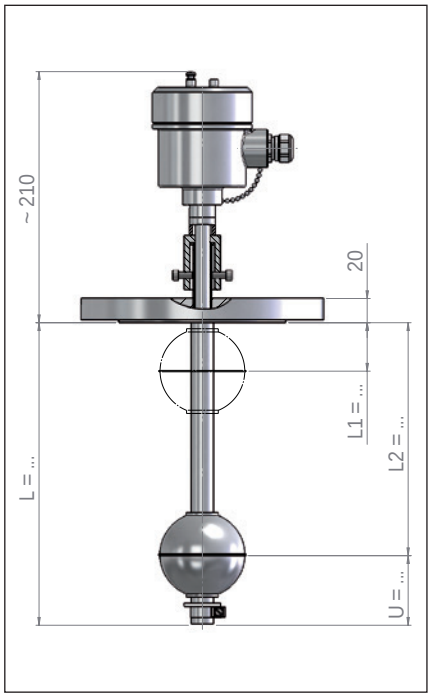

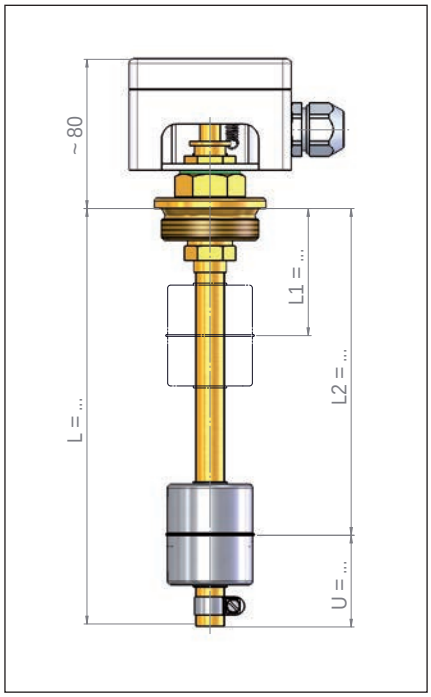

The magnetic float switches are based on a modular design and can be arranged individually.
Type key page 62 - 65

Electrical connection

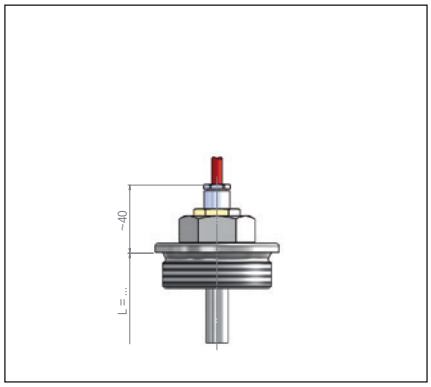

Connection type: K
Material quality: According as cable type
Cable entry: PG or metric
Ingress protection class: IP 55 (optional IP 68)
Ambient temperature: -40°C ... 200°C

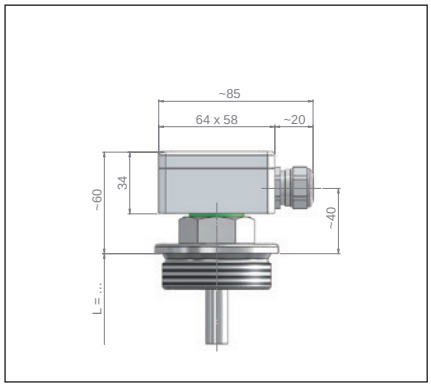

Connection type: ALE
Material quality: Aluminium coated RAL 7001
Cable entry: M20 x 1.5
Ingress protection class: IP 65
Ambient temperature: -40°C ... 100°C

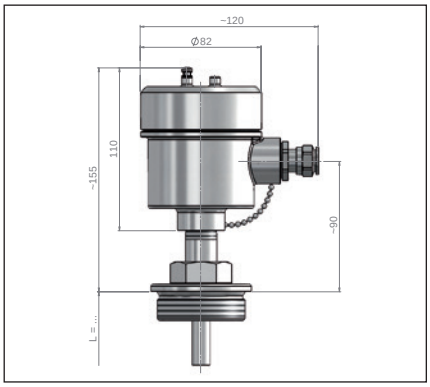

Connection type: AVA / AVDA (Exd)
Material quality: Stainless steel A4 (SS316)
Cable entry: M20 x 1.5
Ingress protection class: IP 67 / (Exd / IP 68)
Ambient temperature: -40°C ... 85°C

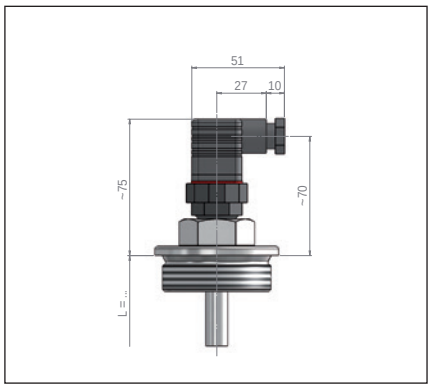

Connection type: ASH
Material quality: PA
Cable entry: M16
Ingress protection class: IP 65
Ambient temperature: -40°C ... 125°C

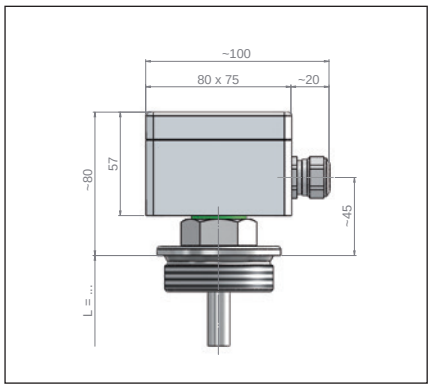

Connection type: ALF
Material quality: Aluminium coated RAL 7001
Cable entry: M20 x 1.5
Ingress protection class: IP 65
Ambient temperature: -40°C ... 100°C

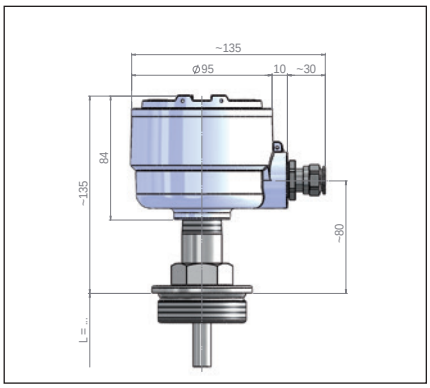

Connection type: ALDA (Exd)
Material quality: Aluminium coated RAL 9006
Cable entry: M20 x 1.5
Ingress protection class: IP 68
Ambient temperature: -40°C ... 100°C

Approvals / Certificates

ATEX*

II 1/2G Ex c ia IIC T6 - T3 bzw. T4 Ga/Gb	II 1/2G Ex c ia IIC T6 - T3 Ga/Gb	II 2G Ex c d IIC T6 - T4 Gb	
II 2G Ex c d IIC T6 - T4 Gb	II 2D Ex c tb IIIC T80°C - T190°C Db IP6X	II 2D Ex c tb IIIC T80°C - T190°C Db IP6X	
Liquid temperature Exia max. 180°C / Exd max. 120°C			
Type of protection intrinsic safety Ex ia IIC switch or temperature switch	I_i ≤ 100 mA		
Type of protection intrinsic safety Ex ia IIC temperature probe	U_i ≤ 28 V	I_i ≤ 100 mA	P_i ≤ 700 mW
Type of protection intrinsic safety Ex ia IIC with option /N (NAMUR EN 60947)	U_i ≤ 15 VDC	I_i ≤ 60 mA	
Type of protection „flameproof enclosure“	U_N ≤ 250 VDC/AC	P_{SN} ≤ 50 W/VA	P_{FN} ≤ 700 mW
Type of protection „flameproof enclosure“ with option /N (NAMUR EN 60947)	U_N ≤ 15 VDC	I_N ≤ 60 mA	
Type of protection „flameproof enclosure“ with option /R22 (resistor)	U_N ≤ 250 VDC/AC	I_N ≤ 100 mA	P_V ≤ 0.21 W

Further electrical connections page 110 - 111
Further process connection according to type key page 62
Further floats page 106 - 109

The magnetic float switches are based on a modular design and can be arranged individually.
Type key page 62 - 65

* = The approval is dependent on the equipment combination

Heinrich Kübler AG
Ruessenstrasse 4 | CH-6340 Baar | Phone +41 (0)41 766 62 62 | Fax +41 (0)41 766 62 63 | E-Mail info@kubler.ch | Internet www.kubler.ch

Type	K/TI/E-3/8-TI/..-L../12-1/STIK44/14/A-../PVC	K/TI/E-3/8-TI/..-L../12-1/STI52/14/A-../SIL
Material quality:	Titanium	Titanium
Electrical connection:	PVC connection cable	Silicon connection cable
Process connection:	G 3/8“	G 3/8“
Guide tube:	Ø 12 mm	Ø 12 mm
Length of instrument:	≤ 5000 mm	≤ 5000 mm
Float:	STIK44/14/A Ø 44 mm	STI52/14/A Ø 52 mm
Specific gravity:	≥ 750 kg/m³	≥ 650 kg/m³
Design pressure:	-1 bar ... 15 bar	-1 bar ... 24 bar
Design temperature:	-10°C ... 80°C	-10°C ... 150°C
Ingress protection class:	IP 55 (optional IP 68)	IP 55 (optional IP 68)
Mounting position:	Vertical +/-30°	Vertical +/-30°
Level switch function		
Function:	Normally open (NO) / S	Normally open (NO) / S
Switching capacity:	230 V / 1.0 A / 100 VA	230 V / 1.0 A / 100 VA
Maximal number of contacts:	5 pieces	5 pieces
Function:	Normally closed (NC) / O	Normally closed (NC) / O
Switching capacity:	230 V / 0.5 A / 40 VA	230 V / 0.5 A / 40 VA
Maximal number of contacts:	5 pieces	5 pieces
Function:	Change over (SPDT) / U	Change over (SPDT) / U
Switching capacity:	230 V / 0.5 A / 40 VA	230 V / 0.5 A / 40 VA
Maximal number of contacts:	4 pieces	4 pieces
Option temperature probe / Page 112		
Temperature probe:	Pt-100 / Pt-1000	Pt-100 / Pt-1000
Norm:	IEC 751 Kl.B	IEC 751 Kl.B
Option temperature switch / Page 112		
Function:	Normally closed (NC) or normally open (NO)	Normally closed (NC) or normally open (NO)
Switching capacity:	Page 112	Page 112
Accuracy / Hysteresis:	Page 112	Page 112
Temperature / Grading:	Page 112	Page 112

Minimum measures

K/TI/E-3/8-TI/..-L../12-1/STIK44/14/A-../PVC
L1: ≥ 50 mm
U: 45 mm
Contact distance: ≥ 20 mm
Float distance: ≥ 70 mm

Approvals / Certificates

ATEX / EAC / PED / SIL1 / WHG

Minimum measures

K/TI/E-3/8-TI/..-L../12-1/STI52/14/A-../SIL
L1: ≥ 55 mm
U: 45 mm
Contact distance: ≥ 20 mm
Float distance: ≥ 70 mm

Approvals / Certificates

ATEX / EAC / PED / SIL1 / WHG

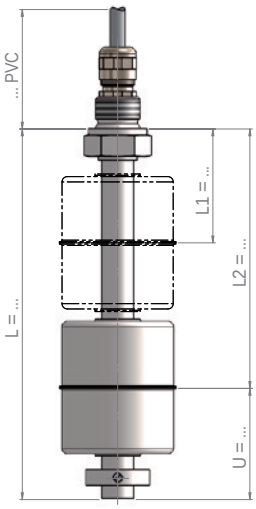

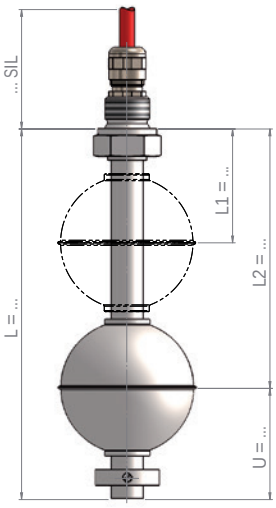

The magnetic float switches are based on a modular design and can be arranged individually.
Type key page 62 - 65

Magnetic Float Switches / Titanium

Type	ALE/TI/R-1½-TI/..-L../12-1/STIK44/14/A	ALE/TI/R-2-TI/..-L../12-1/STI52/14/A
Material quality:	Titanium	Titanium
Electrical connection:	ALE Aluminium terminal box	ALE Aluminium terminal box
Process connection:	G 1½“	G 2“
Guide tube:	Ø 12 mm	Ø 12 mm
Length of instrument:	≤ 5000 mm	≤ 5000 mm
Float:	STIK44/14/A Ø 44 mm	STI52/14/A Ø 52 mm
Specific gravity:	≥ 750 kg/m³	≥ 650 kg/m³
Design pressure:	-1 bar ... 15 bar	-1 bar ... 24 bar
Design temperature:	-10°C ... 150°C	-10°C ... 150°C
Ingress protection class:	IP 65	IP 65
Mounting position:	Vertical +/-30°	Vertical +/-30°
Level switch function		
Function:	Normally open (NO) / S	Normally open (NO) / S
Switching capacity:	230 V / 1.0 A / 100 VA	230 V / 1.0 A / 100 VA
Maximal number of contacts:	4 pieces (5 pieces with ALF terminal box)	4 pieces (5 pieces with ALF terminal box)
Function:	Normally closed (NC) / O	Normally closed (NC) / O
Switching capacity:	230 V / 0.5 A / 40 VA	230 V / 0.5 A / 40 VA
Maximal number of contacts:	4 pieces (5 pieces with ALF terminal box)	4 pieces (5 pieces with ALF terminal box)
Function:	Change over (SPDT) / U	Change over (SPDT) / U
Switching capacity:	230 V / 0.5 A / 40 VA	230 V / 0.5 A / 40 VA
Maximal number of contacts:	3 pieces (4 pieces with ALF terminal box)	3 pieces (4 pieces with ALF terminal box)
Option temperature probe / Page 112		
Temperature probe:	Pt-100 / Pt-1000	Pt-100 / Pt-1000
Norm:	IEC 751 Kl.B	IEC 751 Kl.B
Option temperature switch / Page 112		
Function:	Normally closed (NC) or normally open (NO)	Normally closed (NC) or normally open (NO)
Switching capacity:	Page 112	Page 112
Accuracy / Hysteresis:	Page 112	Page 112
Temperature / Grading:	Page 112	Page 112

Minimum measures

ALE/TI/R-1½-TI/..-L../12-1/STIK44/14/A
L1: ≥ 50 mm
U: 45 mm
Contact distance: ≥ 20 mm
Float distance: ≥ 70 mm

Approvals / Certificates

ATEX / EAC / PED / SIL1 / WHG

Minimum measures

ALE/TI/R-2-TI/..-L../12-1/STI52/14/A
L1: ≥ 55 mm
U: 45 mm
Contact distance: ≥ 20 mm
Float distance: ≥ 70 mm

Approvals / Certificates

ATEX / EAC / PED / SIL1 / WHG

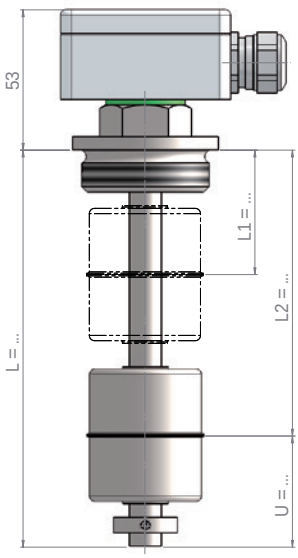

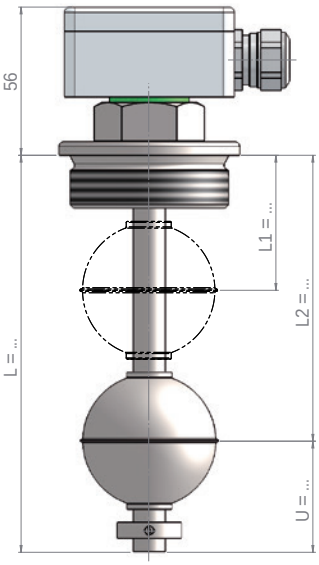

The magnetic float switches are based on a modular design and can be arranged individually.
Type key page 62 - 65

Heinrich Kübler AG
Ruessenstrasse 4 | CH-6340 Baar | Phone +41 (0)41 766 62 62 | Fax +41 (0)41 766 62 63 | E-Mail info@kubler.ch | Internet www.kubler.ch

Type	ALE/TI/FE-65/16/B1-TI/..-L../12-1/STI52/14/A	ALE/TI/FE-100/16/B1-TI/..-L../18-1/STI80/24/A
Material quality:	Titanium	Titanium
Electrical connection:	ALE Aluminium terminal box	ALE Aluminium terminal box
Process connection:	Flange EN DN 65 / PN 16 / Form B1	Flange EN DN 100 / PN 16 / Form B1
Guide tube:	Ø 12 mm	Ø 18 mm
Length of instrument:	≤ 5000 mm	≤ 6000 mm
Float:	STI52/14/A Ø 52 mm	STI80/24/A Ø 80 mm
Specific gravity:	≥ 660 kg/m³	≥ 600 kg/m³
Design pressure:	-1 bar ... 16 bar (depending on temperature)	-1 bar ... 16 bar (depending on temperature)
Design temperature:	-10°C ... 150°C	-10°C ... 150°C
Ingress protection class:	IP 65	IP 65
Mounting position:	Vertical +/-30°	Vertical +/-30°
Level switch function		
Function:	Normally open (NO) / S	Normally open (NO) / S
Switching capacity:	230 V / 1.0 A / 100 VA	230 V / 1.0 A / 100 VA
Maximal number of contacts:	4 pieces (5 pieces with ALF terminal box)	4 pieces (5 pieces with ALF terminal box)
Function:	Normally closed (NC) / O	Normally closed (NC) / O
Switching capacity:	230 V / 0.5 A / 40 VA	230 V / 0.5 A / 40 VA
Maximal number of contacts:	4 pieces (5 pieces with ALF terminal box)	4 pieces (5 pieces with ALF terminal box)
Function:	Change over (SPDT) / U	Change over (SPDT) / U
Switching capacity:	230 V / 0.5 A / 40 VA	230 V / 0.5 A / 40 VA
Maximal number of contacts:	3 pieces (4 pieces with ALF terminal box)	3 pieces (4 pieces with ALF terminal box)
Option temperature probe / Page 112		
Temperature probe:	Pt-100 / Pt-1000	Pt-100 / Pt-1000
Norm:	IEC 751 Kl.B	IEC 751 Kl.B
Option temperature switch / Page 112		
Function:	Normally closed (NC) or normally open (NO)	Normally closed (NC) or normally open (NO)
Switching capacity:	Page 112	Page 112
Accuracy / Hysteresis:	Page 112	Page 112
Temperature / Grading:	Page 112	Page 112

Minimum measures

ALE/TI/FE-65/16/B1-TI/..-L../12-1/STI52/14/A
L1: ≥ 55 mm
U: 45 mm
Contact distance: ≥ 20 mm
Float distance: ≥ 70 mm

Approvals / Certificates

ATEX / EAC / PED / SIL1 / WHG

Minimum measures

ALE/TI/FE-100/16/B1-TI/..-L../18-1/STI80/24/A
L1: ≥ 70 mm
U: 60 mm
Contact distance: ≥ 20 mm
Float distance: ≥ 95 mm

Approvals / Certificates

ATEX / EAC / PED / SIL1 / WHG

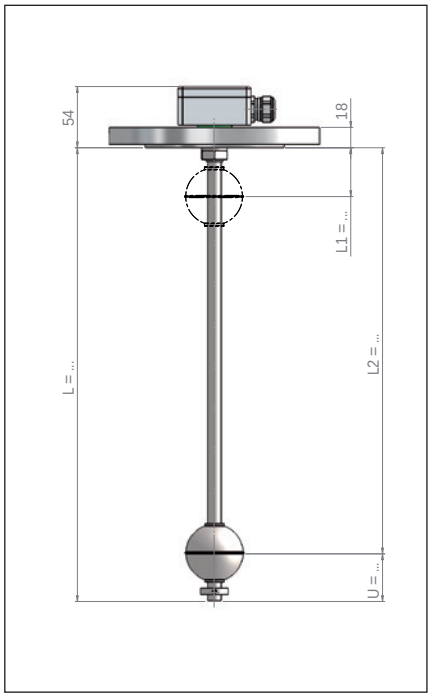

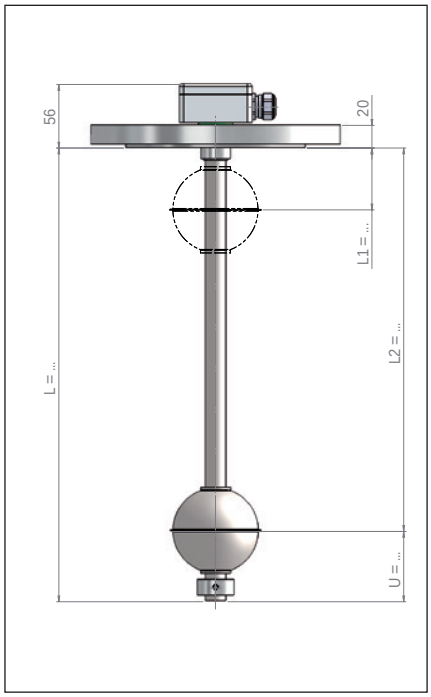

The magnetic float switches are based on a modular design and can be arranged individually.
Type key page 62 - 65

Electrical connection

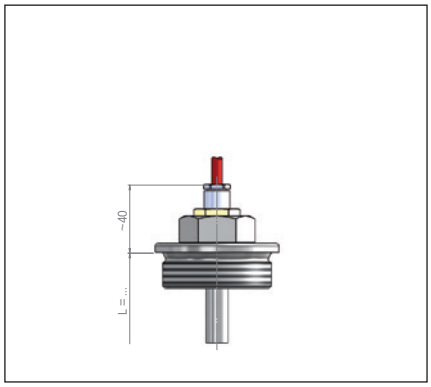

Connection type: K
Material quality: According as cable type
Cable entry: PG or metric
Ingress protection class: IP 55 (optional IP 68)
Ambient temperature: -40°C ... 200°C

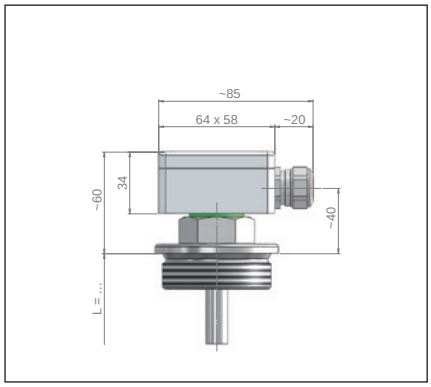

Connection type: ALE
Material quality: Aluminium coated RAL 7001
Cable entry: M20 x 1.5
Ingress protection class: IP 65
Ambient temperature: -40°C ... 100°C

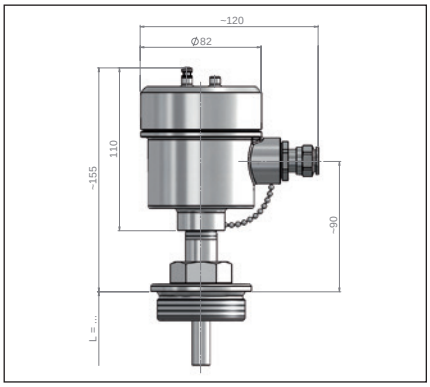

Connection type: AVA / AVDA (Exd)
Material quality: Stainless steel A4 (SS316)
Cable entry: M20 x 1.5
Ingress protection class: IP 67 / (Exd / IP 68)
Ambient temperature: -40°C ... 85°C

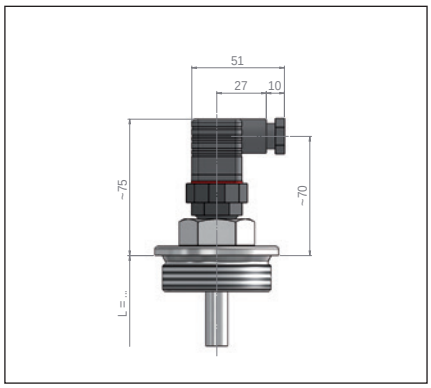

Connection type: ASH
Material quality: PA
Cable entry: M16
Ingress protection class: IP 65
Ambient temperature: -40°C ... 125°C

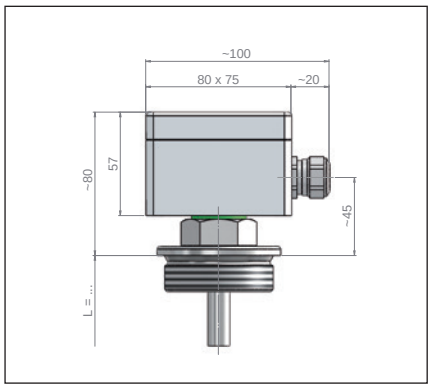

Connection type: ALF
Material quality: Aluminium coated RAL 7001
Cable entry: M20 x 1.5
Ingress protection class: IP 65
Ambient temperature: -40°C ... 100°C

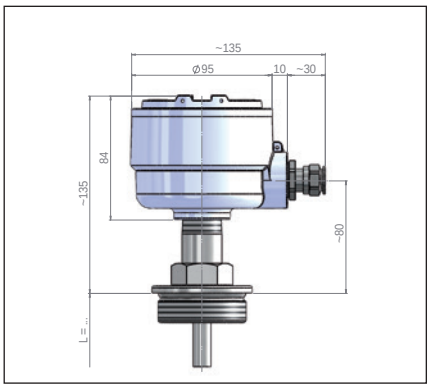

Connection type: ALDA (Exd)
Material quality: Aluminium coated RAL 9006
Cable entry: M20 x 1.5
Ingress protection class: IP 68
Ambient temperature: -40°C ... 100°C

Approvals / Certificates

ATEX*

II 1/2G	Ex c ia IIC T6 - T3 bzw. T4 Ga/Gb	II 1/2G	Ex c ia IIC T6 - T3 Ga/Gb	II 2G	Ex c d IIC T6 - T4 Gb
II 2G	Ex c d IIC T6 - T4 Gb	II 2D	Ex c tb IIIC T80°C - T190°C Db IP6X	II 2D	Ex c tb IIIC T80°C - T190°C Db IP6X

Liquid temperature Exia max. 180°C / Exd max. 120°C

Type of protection intrinsic safety Ex ia IIC switch or temperature switch	I_i ≤ 100 mA		
Type of protection intrinsic safety Ex ia IIC temperature probe	U_i ≤ 28 V	I_i ≤ 100 mA	P_i ≤ 700 mW
Type of protection intrinsic safety Ex ia IIC with option /N (NAMUR EN 60947)	U_i ≤ 15 VDC	I_i ≤ 60 mA	
Type of protection „flameproof enclosure“	U_N ≤ 250 VDC/AC	P_{SN} ≤ 50 W/VA	P_{FN} ≤ 700 mW
Type of protection „flameproof enclosure“ with option /N (NAMUR EN 60947)	U_N ≤ 15 VDC	I_N ≤ 60 mA	
Type of protection „flameproof enclosure“ with option /R22 (resistor)	U_N ≤ 250 VDC/AC	I_N ≤ 100 mA	P_V ≤ 0.21 W

Further electrical connections page 110 - 111
Further process connection according to type key page 62
Further floats page 106 - 109

The magnetic float switches are based on a modular design and can be arranged individually.
Type key page 62 - 65

* = The approval is dependent on the equipment combination

Heinrich Kübler AG
Ruessenstrasse 4 | CH-6340 Baar | Phone +41 (0)41 766 62 62 | Fax +41 (0)41 766 62 63 | E-Mail info@kubler.ch | Internet www.kubler.ch

Type	K/HC/E-3/8-HC/..-L../12-1/SHC52/15/A-../SIL	ALE/HC/FE-80/16/B1-HC/..-L../18-1/SHC72/24/V
Material quality:	Alloy C	Alloy C
Electrical connection:	Silicon connection cable	ALE Aluminium terminal box
Process connection:	G 3/8“	Flange EN DN 80 / PN 16 / Form B1
Guide tube:	Ø 12 mm	Ø 18 mm
Length of instrument:	≤ 3000 mm	≤ 6000 mm
Float:	SHC52/15/A Ø 52 mm	SHC72/24/V Ø 72 mm
Specific gravity:	≥ 1260 kg/m³	≥ 820 kg/m³
Design pressure:	-1 bar ... 55 bar	-1 bar ... 16 bar (depending on temperature)
Design temperature:	-40°C ... 180°C	-40°C ... 200°C
Ingress protection class:	IP 55 (optional IP 68)	IP 65
Mounting position:	Vertical +/-30°	Vertical +/-30°
Level switch function		
Function:	Normally open (NO) / S	Normally open (NO) / S
Switching capacity:	230 V / 1.0 A / 100 VA	230 V / 1.0 A / 100 VA
Maximal number of contacts:	5 pieces	4 pieces (5 pieces with ALF terminal box)
Function:	Normally closed (NC) / O	Normally closed (NC) / O
Switching capacity:	230 V / 0.5 A / 40 VA	230 V / 0.5 A / 40 VA
Maximal number of contacts:	5 pieces	4 pieces (5 pieces with ALF terminal box)
Function:	Change over (SPDT) / U	Change over (SPDT) / U
Switching capacity:	230 V / 0.5 A / 40 VA	230 V / 0.5 A / 40 VA
Maximal number of contacts:	4 pieces	3 pieces (4 pieces with ALF terminal box)
Option temperature probe / Page 112		
Temperature probe:	Pt-100 / Pt-1000	Pt-100 / Pt-1000
Norm:	IEC 751 Kl.B	IEC 751 Kl.B
Option temperature switch / Page 112		
Function:	Normally closed (NC) or normally open (NO)	Normally closed (NC) or normally open (NO)
Switching capacity:	Page 112	Page 112
Accuracy / Hysteresis:	Page 112	Page 112
Temperature / Grading:	Page 112	Page 112

Minimum measures

K/HC/E-3/8-HC/..-L../12-1/SHC52/15/A-../SIL
L1: ≥ 55 mm
U: 45 mm
Contact distance: ≥ 20 mm
Float distance: ≥ 70 mm

Approvals / Certificates

ATEX / EAC / PED / SIL1 / WHG

Minimum measures

ALEHCFE-80/16/B1-HC..-L../18-1/SHC72/24/V
L1: ≥ 60 mm
U: 60 mm
Contact distance: ≥ 20 mm
Float distance: ≥ 90 mm

Approvals / Certificates

ATEX / EAC / PED / SIL1 / WHG

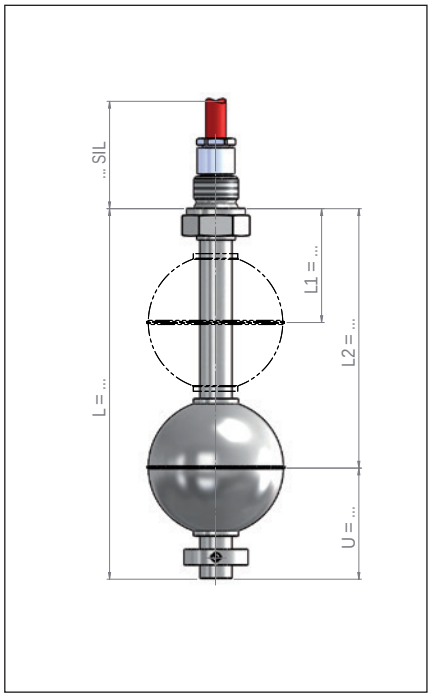

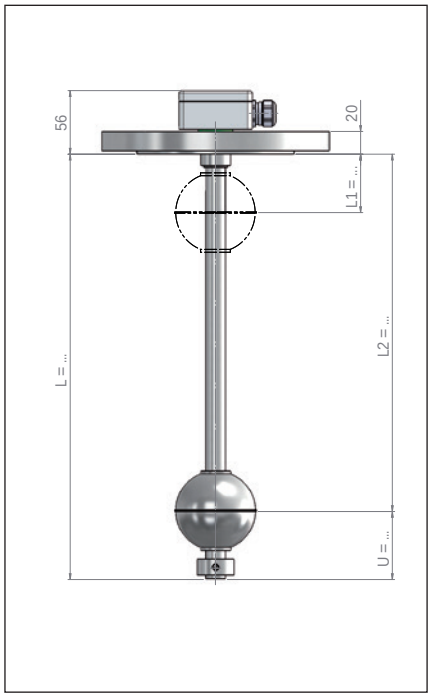

The magnetic float switches are based on a modular design and can be arranged individually.
Type key page 62 - 65

Electrical connection

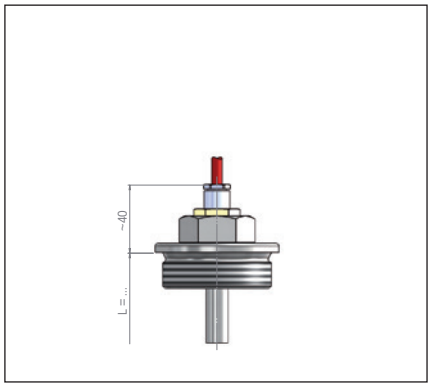

Connection type: K
Material quality: According as cable type
Cable entry: PG or metric
Ingress protection class: IP 55 (optional IP 68)
Ambient temperature: -40°C ... 200°C

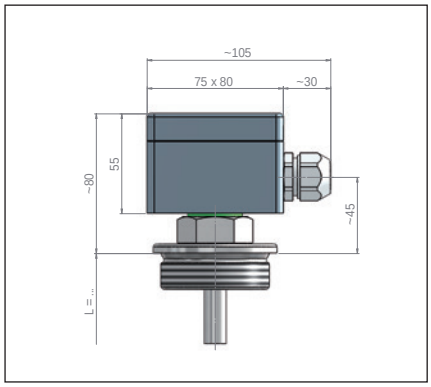

Connection type: APA / APB (Ex)
Material quality: Polyester
Cable entry: M20 x 1.5
Ingress protection class: IP 65
Ambient temperature: -10°C ... 100°C

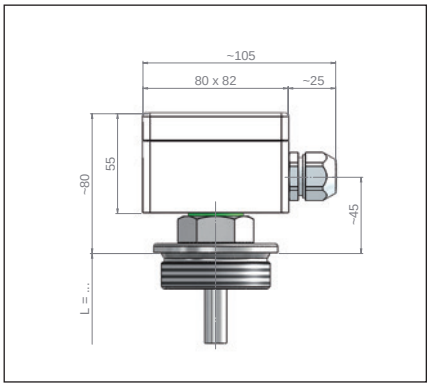

Connection type: ABA
Material quality: ABS
Cable entry: M20 x 1.5
Ingress protection class: IP 65
Ambient temperature: -10°C ... 80°C

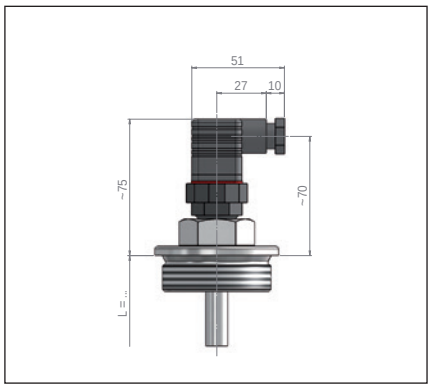

Connection type: ASH
Material quality: PA
Cable entry: M16
Ingress protection class: IP 65
Ambient temperature: -40°C ... 125°C

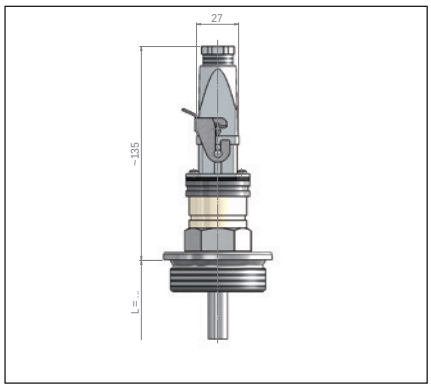

Connection type: ASHAA / ASHBA (Aluminium)
Material quality: Plastic / Aluminium
Cable entry: M20
Ingress protection class: IP 65
Ambient temperature: -10°C ... 80°C

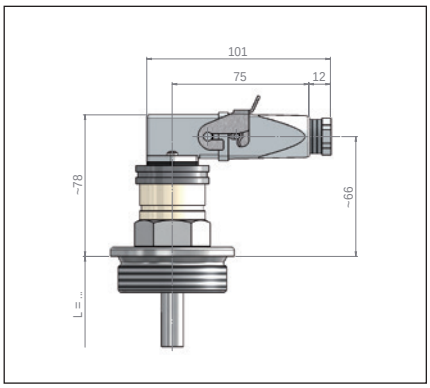

Connection type: ASHAB / ASHBB (Aluminium)
Material quality: Plastic / Aluminium
Cable entry: M20
Ingress protection class: IP 65
Ambient temperature: -10°C ... 80°C

Approvals / Certificates

DIBt WHG §19 SIL TÜV SÜD

Further electrical connections page 110 - 111
Further process connection according to type key page 62
Further floats page 106 - 109

The magnetic float switches are based on a modular design and can be arranged individually.
Type key page 62 - 65

Heinrich Kübler AG
Ruessenstrasse 4 | CH-6340 Baar | Phone +41 (0)41 766 62 62 | Fax +41 (0)41 766 62 63 | E-Mail info@kubler.ch | Internet www.kubler.ch

Type	K/P/E-3/8-P/..-L../12-1/SPK42/14/A-../PVC	K/P/E-1-P/..-L../16-1/SPK54/22/A-../PVC
Material quality:	PVC	PVC
Electrical connection:	PVC connection cable	PVC connection cable
Process connection:	G 3/8“	G 1“
Guide tube:	Ø 12 mm	Ø 16 mm
Length of instrument:	≤ 3000 mm	≤ 3000 mm
Float:	SPK42/14/A Ø 42 mm	SPK54/22/A Ø 54 mm
Specific gravity:	≥ 800 kg/m³	≥ 750 kg/m³
Design pressure:	-1 bar ... 1 bar	-1 bar ... 1 bar
Design temperature:	-15°C ... 60°C	-15°C ... 60°C
Ingress protection class:	IP 55	IP 55 (optional IP 68)
Mounting position:	Vertical +/-30°	Vertical +/-30°
Level switch function		
Function:	Normally open (NO) / S	Normally open (NO) / S
Switching capacity:	230 V / 1.0 A / 100 VA	230 V / 1.0 A / 100 VA
Maximal number of contacts:	5 pieces	5 pieces
Function:	Normally closed (NC) / O	Normally closed (NC) / O
Switching capacity:	230 V / 0.5 A / 40 VA	230 V / 0.5 A / 40 VA
Maximal number of contacts:	5 pieces	5 pieces
Function:	Change over (SPDT) / U	Change over (SPDT) / U
Switching capacity:	230 V / 0.5 A / 40 VA	230 V / 0.5 A / 40 VA
Maximal number of contacts:	4 pieces	4 pieces
Option temperature probe / Page 112		
Temperature probe:	Pt-100 / Pt-1000	Pt-100 / Pt-1000
Norm:	IEC 751 Kl.B	IEC 751 Kl.B
Option temperature switch / Page 112		
Function:	Normally closed (NC) or normally open (NO)	Normally closed (NC) or normally open (NO)
Switching capacity:	Page 112	Page 112
Accuracy / Hysteresis:	Page 112	Page 112
Temperature / Grading:	Page 112	Page 112

Minimum measures

K/P/E-3/8-P/..-L../12-1/SPK42/14/A-../PVC
L1: ≥ 50 mm
U: 40 mm
Contact distance: ≥ 20 mm
Float distance: ≥ 65 mm

Approvals / Certificates

PED / SIL1 / WHG

Minimum measures

K/P/E-1-P/..-L../16-1/SPK54/22/A-../PVC
L1: ≥ 65 mm
U: 50 mm
Contact distance: ≥ 20 mm
Float distance: ≥ 75 mm

Approvals / Certificates

PED / SIL1 / WHG

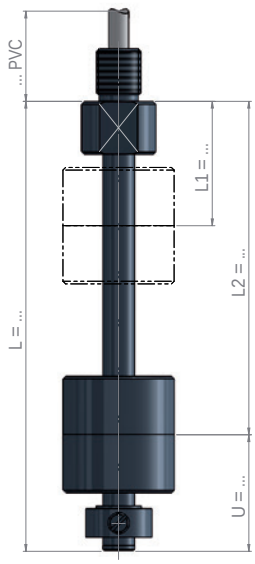

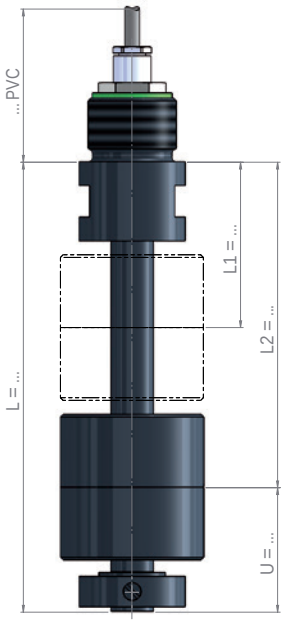

The magnetic float switches are based on a modular design and can be arranged individually.
Type key page 62 - 65

Electrical connection

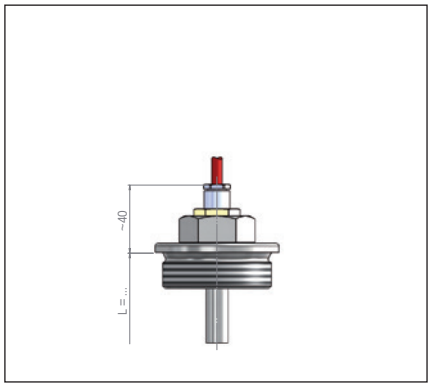

Connection type: K
Material quality: According as cable type
Cable entry: PG or metric
Ingress protection class: IP 55 (optional IP 68)
Ambient temperature: -40°C ... 200°C

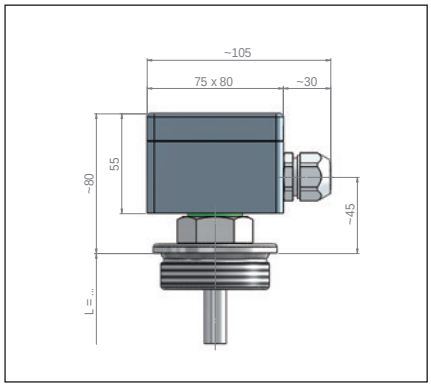

Connection type: APA / APB (Ex)
Material quality: Polyester
Cable entry: M20 x 1.5
Ingress protection class: IP 65
Ambient temperature: -10°C ... 100°C

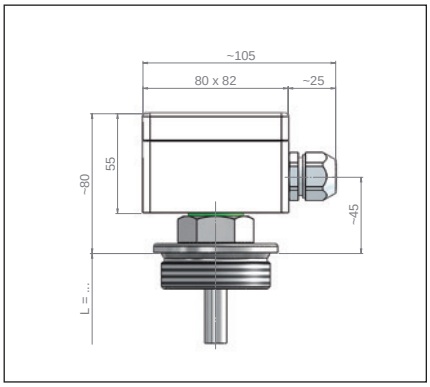

Connection type: ABA
Material quality: ABS
Cable entry: M20 x 1.5
Ingress protection class: IP 65
Ambient temperature: -10°C ... 80°C

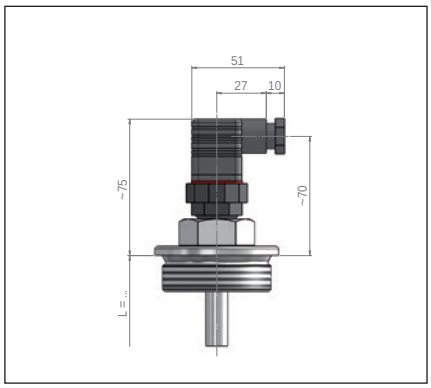

Connection type: ASH
Material quality: PA
Cable entry: M16
Ingress protection class: IP 65
Ambient temperature: -40°C ... 125°C

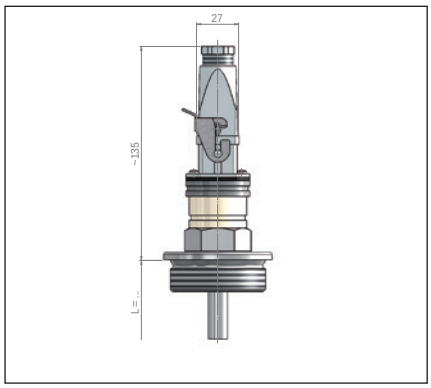

Connection type: ASHAA / ASHBA (Aluminium)
Material quality: Plastic / Aluminium
Cable entry: M20
Ingress protection class: IP 65
Ambient temperature: -10°C ... 80°C

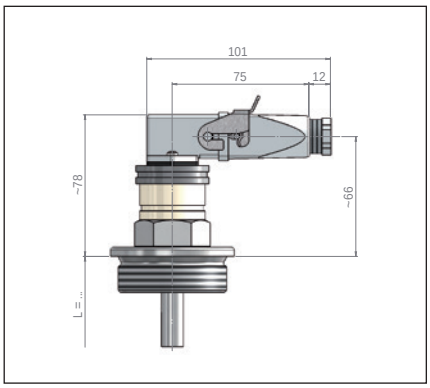

Connection type: ASHAB / ASHBB (Aluminium)
Material quality: Plastic / Aluminium
Cable entry: M20
Ingress protection class: IP 65
Ambient temperature: -10°C ... 80°C

Approvals / Certificates

DIBt WHG §19 SIL TÜV SÜD

Further electrical connections page 110 - 111
Further process connection according to type key page 62
Further floats page 106 - 109

The magnetic float switches are based on a modular design and can be arranged individually.
Type key page 62 - 65

Heinrich Kübler AG
Ruessenstrasse 4 | CH-6340 Baar | Phone +41 (0)41 766 62 62 | Fax +41 (0)41 766 62 63 | E-Mail info@kubler.ch | Internet www.kubler.ch

Type	K/PP/E-1/8-PP/..-L60/8-1/SPPK25/9/A-../PVC	K/PP/E-3/8-PP/..-L../12-1/SPPK44/13/A-../PVC
Material quality:	Polypropylene	Polypropylene
Electrical connection:	PVC connection cable	PVC connection cable
Process connection:	G 1/8“	G 3/8“
Guide tube:	Ø 8 mm	Ø 12 mm
Length of instrument:	60 mm	≤ 3000 mm
Float:	SPPK25/9/A Ø 25 mm	SPPK44/13/A Ø 44 mm
Specific gravity:	≥ 800 kg/m³	≥ 700 kg/m³
Design pressure:	-1 bar ... 1 bar	-1 bar ... 1 bar
Design temperature:	-10°C ... 80°C	-10°C ... 80°C
Ingress protection class:	IP 55	IP 55
Mounting position:	Vertical +/-30°	Vertical +/-30°
Level switch function		
Function:	Normally open (NO) / S	Normally open (NO) / S
Switching capacity:	230 V / 1.0 A / 100 VA	230 V / 1.0 A / 100 VA
Maximal number of contacts:	1 piece	5 pieces
Function:	Normally closed (NC) / O	Normally closed (NC) / O
Switching capacity:	230 V / 0.5 A / 40 VA	230 V / 0.5 A / 40 VA
Maximal number of contacts:	1 piece	5 pieces
Function:	Change over (SPDT) / U	Change over (SPDT) / U
Switching capacity:	230 V / 0.5 A / 40 VA	230 V / 0.5 A / 40 VA
Maximal number of contacts:	1 piece	4 pieces
Option temperature probe / Page 112		
Temperature probe:	Pt-100 / Pt-1000	Pt-100 / Pt-1000
Norm:	IEC 751 Kl.B	IEC 751 Kl.B
Option temperature switch / Page 112		
Function:	Normally closed (NC) or normally open (NO)	Normally closed (NC) or normally open (NO)
Switching capacity:	Page 112	Page 112
Accuracy / Hysteresis:	Page 112	Page 112
Temperature / Grading:	Page 112	Page 112

Minimum measures

K/PP/E-1/8-PP/..-L60/8-1/SPPK25/9/A-../PVC
L1: 12 mm
U: 32 mm
Contact distance: -
Float distance: -

Approvals / Certificates

PED / SIL1 / WHG

Minimum measures

K/PP/E-3/8-PP/..-L../12-1/SPPK44/13/A-../PVC
L1: ≥ 50 mm
U: 40 mm
Contact distance: ≥ 20 mm
Float distance: ≥ 65 mm

Approvals / Certificates

PED / SIL1 / WHG

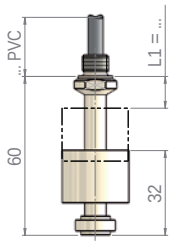

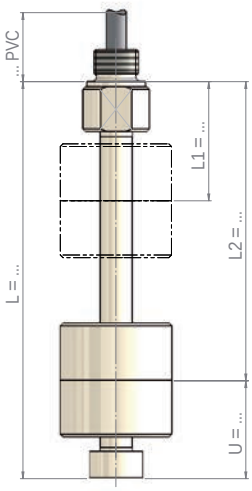

The magnetic float switches are based on a modular design and can be arranged individually.
Type key page 62 - 65

Magnetic Float Switches / Polypropylene

Type	K/PP/E-1-PP/..-L../16-1/SPPK56/21/A-../PVC	K/PP/E-1-PP/..-L../20-1/SPPK80/24/A-../PVC
Material quality:	Polypropylene	Polypropylene
Electrical connection:	PVC connection cable	PVC connection cable
Process connection:	G 1“	G 1“
Guide tube:	Ø 16 mm	Ø 20 mm
Length of instrument:	≤ 3000 mm	≤ 6000 mm
Float:	SPPK56/21/A Ø 56 mm	SPPK80/24/A Ø 80 mm
Specific gravity:	≥ 600 kg/m³	≥ 500 kg/m³
Design pressure:	-1 bar ... 1 bar	-1 bar ... 1 bar
Design temperature:	-10°C ... 80°C	-10°C ... 80°C
Ingress protection class:	IP 55 (optional IP 68)	IP 55 (optional IP 68)
Mounting position:	Vertical +/-30°	Vertical +/-30°
Level switch function		
Function:	Normally open (NO) / S	Normally open (NO) / S
Switching capacity:	230 V / 1.0 A / 100 VA	230 V / 1.0 A / 100 VA
Maximal number of contacts:	5 pieces	5 pieces
Function:	Normally closed (NC) / O	Normally closed (NC) / O
Switching capacity:	230 V / 0.5 A / 40 VA	230 V / 0.5 A / 40 VA
Maximal number of contacts:	5 pieces	5 pieces
Function:	Change over (SPDT) / U	Change over (SPDT) / U
Switching capacity:	230 V / 0.5 A / 40 VA	230 V / 0.5 A / 40 VA
Maximal number of contacts:	4 pieces	4 pieces
Option temperature probe / Page 112		
Temperature probe:	Pt-100 / Pt-1000	Pt-100 / Pt-1000
Norm:	IEC 751 Kl.B	IEC 751 Kl.B
Option temperature switch / Page 112		
Function:	Normally closed (NC) or normally open (NO)	Normally closed (NC) or normally open (NO)
Switching capacity:	Page 112	Page 112
Accuracy / Hysteresis:	Page 112	Page 112
Temperature / Grading:	Page 112	Page 112

Minimum measures

K/PP/E-1-PP/..-L../16-1/SPPK56/21/A-../PVC
L1: ≥ 65 mm
U: 50 mm
Contact distance: ≥ 20 mm
Float distance: ≥ 75 mm

Approvals / Certificates

PED / SIL1 / WHG

Minimum measures

K/PP/E-1-PP/..-L../20-1/SPPK80/24/A-../PVC
L1: ≥ 80 mm
U: 65 mm
Contact distance: ≥ 20 mm
Float distance: ≥ 100 mm

Approvals / Certificates

PED / SIL1 / WHG

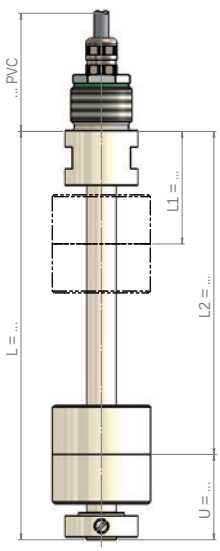

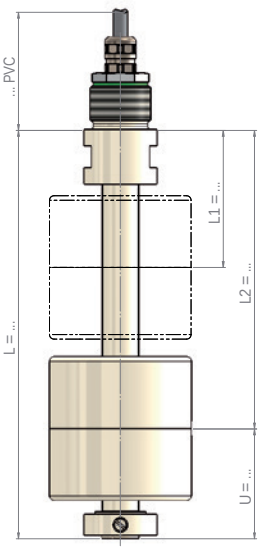

The magnetic float switches are based on a modular design and can be arranged individually.
Type key page 62 - 65

Heinrich Kübler AG
Ruessenstrasse 4 | CH-6340 Baar | Phone +41 (0)41 766 62 62 | Fax +41 (0)41 766 62 63 | E-Mail info@kubler.ch | Internet www.kubler.ch

Type	APA/PP/R-2-PP/..-L../16-1/SPPK56/21/A-FG	APA/PP/FE-65/10/A-PP/..-L../16-1/SPPK56/21/A-FG
Material quality:	Polypropylene	Polypropylene
Electrical connection:	Polyester terminal box	Polyester terminal box
Process connection:	G 2“	Flange EN DN 65 / PN 10 / Form A
Guide tube:	Ø 16 mm	Ø 16 mm
Length of instrument:	≤ 3000 mm	≤ 3000 mm
Float:	SPPK56/21/A Ø 56 mm	SPPK56/21/A Ø 56 mm
Specific gravity:	≥ 600 kg/m³	≥ 600 kg/m³
Design pressure:	-1 bar ... 1 bar	-1 bar ... 1 bar
Design temperature:	-10°C ... 80°C	-10°C ... 80°C
Ingress protection class:	IP 65	IP 65
Mounting position:	Vertical +/-30°	Vertical +/-30°
Level switch function		
Function:	Normally open (NO) / S	Normally open (NO) / S
Switching capacity:	230 V / 1.0 A / 100 VA	230 V / 1.0 A / 100 VA
Maximal number of contacts:	5 pieces	5 pieces
Function:	Normally closed (NC) / O	Normally closed (NC) / O
Switching capacity:	230 V / 0.5 A / 40 VA	230 V / 0.5 A / 40 VA
Maximal number of contacts:	5 pieces	5 pieces
Function:	Change over (SPDT) / U	Change over (SPDT) / U
Switching capacity:	230 V / 0.5 A / 40 VA	230 V / 0.5 A / 40 VA
Maximal number of contacts:	4 pieces	4 pieces
Option temperature probe / Page 112		
Temperature probe:	Pt-100 / Pt-1000	Pt-100 / Pt-1000
Norm:	IEC 751 Kl.B	IEC 751 Kl.B
Option temperature switch / Page 112		
Function:	Normally closed (NC) or normally open (NO)	Normally closed (NC) or normally open (NO)
Switching capacity:	Page 112	Page 112
Accuracy / Hysteresis:	Page 112	Page 112
Temperature / Grading:	Page 112	Page 112

Minimum measures

APA/PP/R-2-PP/..-L../16-1/SPPK56/21/A-FG
L1: ≥ 65 mm
U: 50 mm
Contact distance: ≥ 20 mm
Float distance: ≥ 75 mm

Approvals / Certificates

SIL

Minimum measures

APA/PP/FE-65/10/A-PP/..-L../16-1/SPPK56/21/A-FG
L1: ≥ 65 mm
U: 50 mm
Contact distance: ≥ 20 mm
Float distance: ≥ 75 mm

Approvals / Certificates

SIL

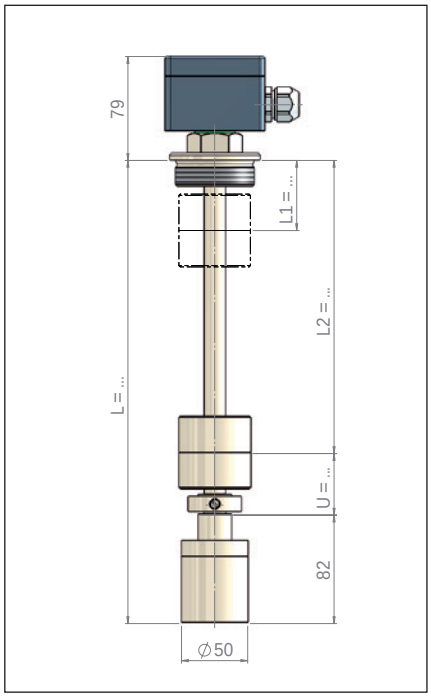

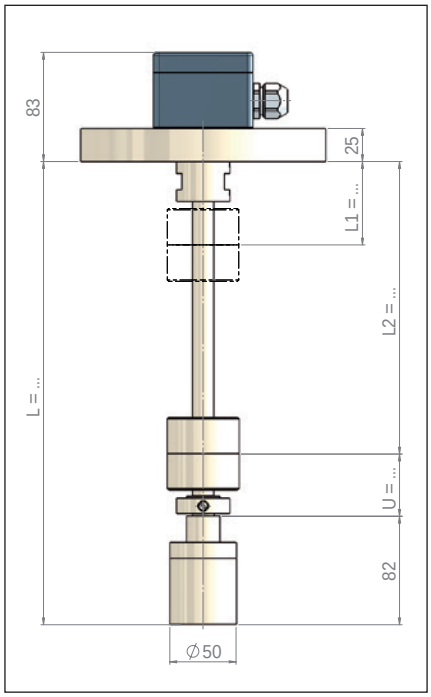

The magnetic float switches are based on a modular design and can be arranged individually.
Type key page 62 - 65

Electrical connection

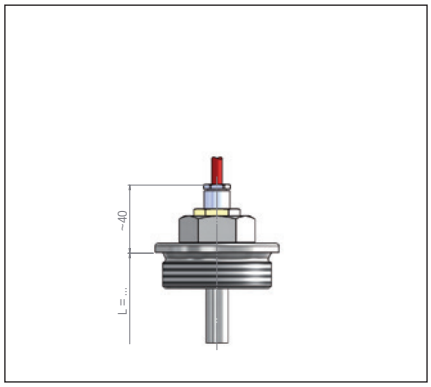

Connection type: K
Material quality: According as cable type
Cable entry: PG or metric
Ingress protection class: IP 55 (optional IP 68)
Ambient temperature: -40°C ... 200°C

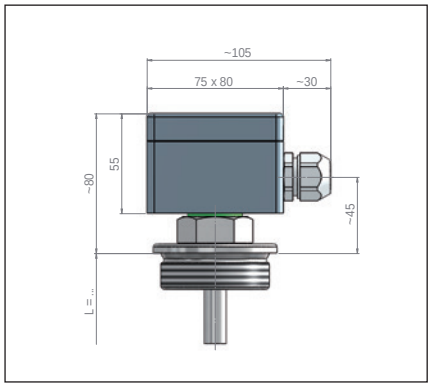

Connection type: APA / APB (Ex)
Material quality: Polyester
Cable entry: M20 x 1.5
Ingress protection class: IP 65
Ambient temperature: -10°C ... 100°C

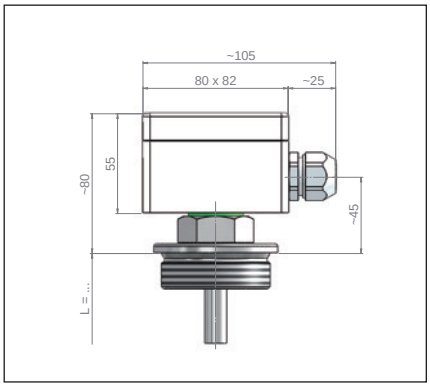

Connection type: ABA
Material quality: ABS
Cable entry: M20 x 1.5
Ingress protection class: IP 65
Ambient temperature: -10°C ... 80°C

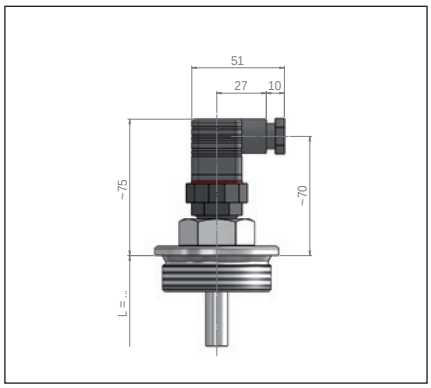

Connection type: ASH
Material quality: PA
Cable entry: M16
Ingress protection class: IP 65
Ambient temperature: -40°C ... 125°C

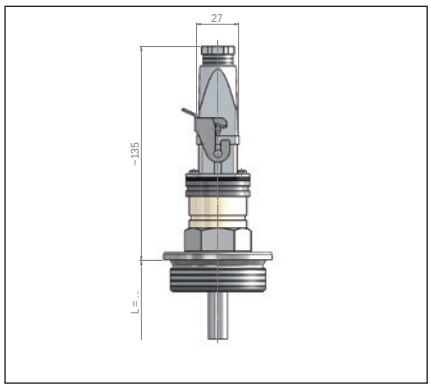

Connection type: ASHAA / ASHBA (Aluminium)
Material quality: Plastic / Aluminium
Cable entry: M20
Ingress protection class: IP 65
Ambient temperature: -10°C ... 80°C

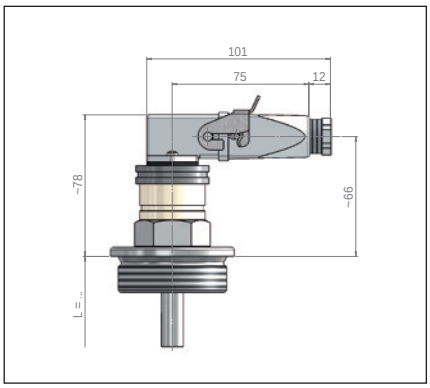

Connection type: ASHAB / ASHBB (Aluminium)
Material quality: Plastic / Aluminium
Cable entry: M20
Ingress protection class: IP 65
Ambient temperature: -10°C ... 80°C

Approvals / Certificates

DIBt WHG §19 SIL TÜV SÜD

Further electrical connections page 110 - 111
Further process connection according to type key page 62
Further floats page 106 - 109

The magnetic float switches are based on a modular design and can be arranged individually.
Type key page 62 - 65

Heinrich Kübler AG
Ruessenstrasse 4 | CH-6340 Baar | Phone +41 (0)41 766 62 62 | Fax +41 (0)41 766 62 63 | E-Mail info@kubler.ch | Internet www.kubler.ch

Type	K/PF/E-3/8-PF/..-L../12-1/SPFK44/13/A-../SIL	K/PF/E-1-PF/..-L../16-1/SPFK56/21/A-../SIL
Material quality:	PVDF	PVDF
Electrical connection:	Silicon connection cable	Silicon connection cable
Process connection:	G 3/8“	G 1“
Guide tube:	Ø 12 mm	Ø 16 mm
Length of instrument:	≤ 3000 mm	≤ 3000 mm
Float:	SPFK44/13/A Ø 44 mm	SPFK56/21/A Ø 56 mm
Specific gravity:	≥ 850 kg/m³	≥ 800 kg/m³
Design pressure:	-1 bar ... 1 bar	-1 bar ... 1 bar
Design temperature:	-10°C ... 100°C	-10°C ... 100°C
Ingress protection class:	IP 55	IP 55 (optional IP 68)
Mounting position:	Vertical +/-30°	Vertical +/-30°
Level switch function		
Function:	Normally open (NO) / S	Normally open (NO) / S
Switching capacity:	230 V / 1.0 A / 100 VA	230 V / 1.0 A / 100 VA
Maximal number of contacts:	5 pieces	5 pieces
Function:	Normally closed (NC) / O	Normally closed (NC) / O
Switching capacity:	230 V / 0.5 A / 40 VA	230 V / 0.5 A / 40 VA
Maximal number of contacts:	5 pieces	5 pieces
Function:	Change over (SPDT) / U	Change over (SPDT) / U
Switching capacity:	230 V / 0.5 A / 40 VA	230 V / 0.5 A / 40 VA
Maximal number of contacts:	2 pieces	2 pieces
Option temperature probe / Page 112		
Temperature probe:	Pt-100 / Pt-1000	Pt-100 / Pt-1000
Norm:	IEC 751 Kl.B	IEC 751 Kl.B
Option temperature switch / Page 112		
Function:	Normally closed (NC) or normally open (NO)	Normally closed (NC) or normally open (NO)
Switching capacity:	Page 112	Page 112
Accuracy / Hysteresis:	Page 112	Page 112
Temperature / Grading:	Page 112	Page 112

Minimum measures

K/PF/E-3/8-PF/..-L../12-1/SPFK44/13/A-../SIL
L1: ≥ 50 mm
U: 55 mm
Contact distance: ≥ 20 mm
Float distance: ≥ 70 mm

Approvals / Certificates

PED / SIL1 / WHG

Minimum measures

K/PF/E-1-PF/..-L../16-1/SPFK56/21/A-../SIL
L1: ≥ 65 mm
U: 60 mm
Contact distance: ≥ 20 mm
Float distance: ≥ 90 mm

Approvals / Certificates

PED / SIL1 / WHG

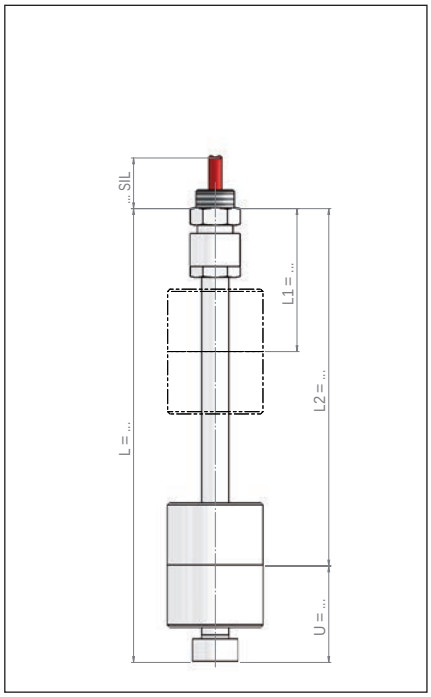

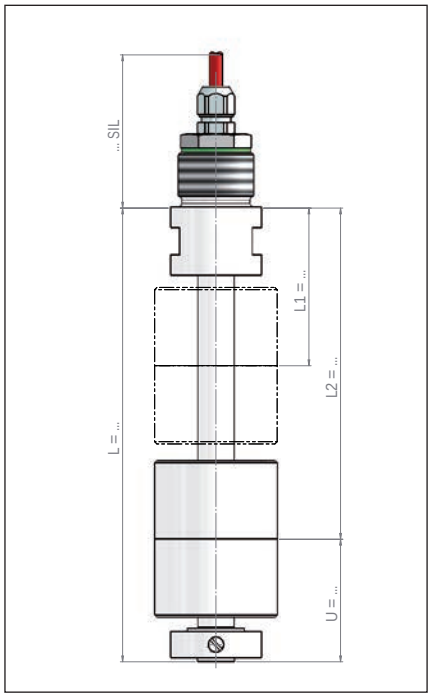

The magnetic float switches are based on a modular design and can be arranged individually.
Type key page 62 - 65

Magnetic Float Switches / Stainless steel - ECTFE coated

Electrical connection

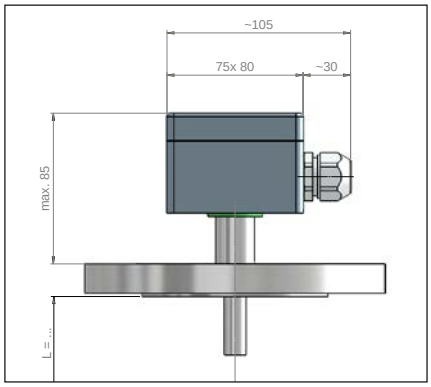

Connection type: APA / APB (Ex)
Material quality: Polyester
Cable entry: M20 x 1.5
Ingress protection class: IP 65
Ambient temperature: -10°C ... 100°C

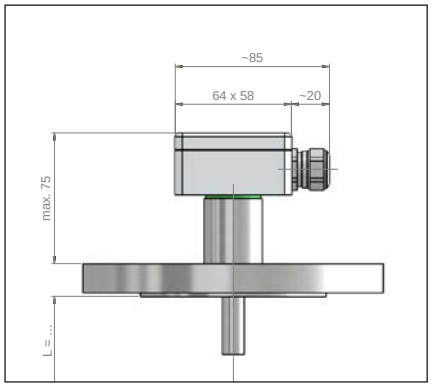

Connection type: ALE
Material quality: Aluminium coated RAL 7001
Cable entry: M20 x 1.5
Ingress protection class: IP 65
Ambient temperature: -40°C ... 100°C

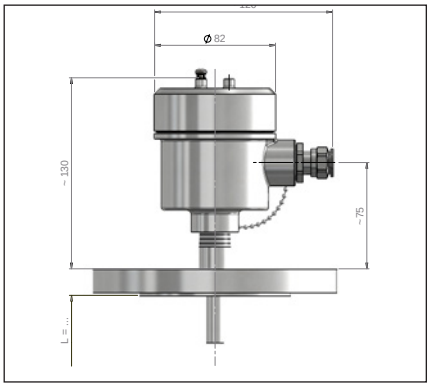

Connection type: AVA / AVDA (Exd)
Material quality: Stainless steel A4 (SS316)
Cable entry: M20 x 1.5
Ingress protection class: IP 67 / (Exd / IP 68)
Ambient temperature: -40°C ... 85°C

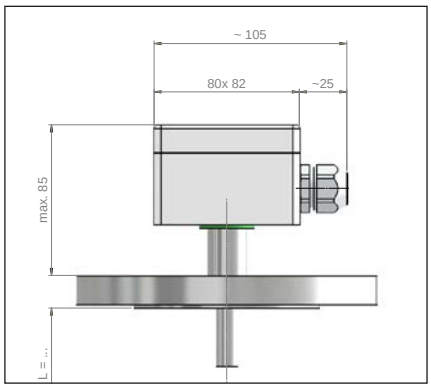

Connection type: ABA
Material quality: ABS
Cable entry: M20 x 1.5
Ingress protection class: IP 65
Ambient temperature: -10°C ... 80°C

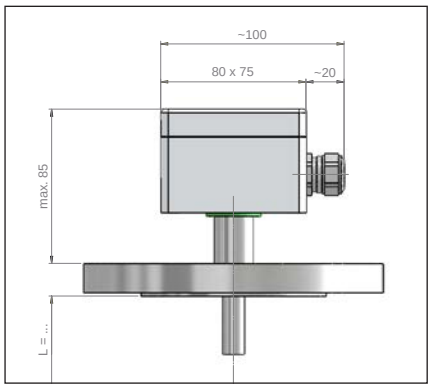

Connection type: ALF
Material quality: Aluminium coated RAL 7001
Cable entry: M20 x 1.5
Ingress protection class: IP 65
Ambient temperature: -40°C ... 100°C

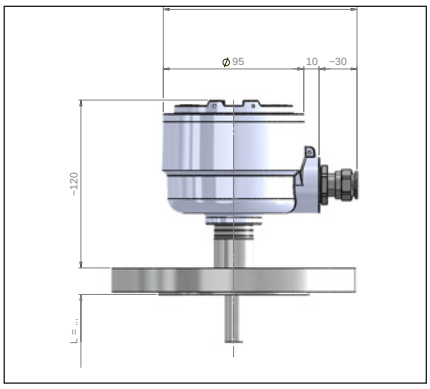

Connection type: ALDA (Exd)
Material quality: Aluminium coated RAL 9006
Cable entry: M20 x 1.5
Ingress protection class: IP 68
Ambient temperature: -40°C ... 100°C

Approvals / Certificates

ATEX*

II 1/2G	Ex c ia IIC T6 - T3 bzw. T4 Ga/Gb	II 1/2G	Ex c ia IIC T6 - T3 Ga/Gb	II 2G	Ex c d IIC T6 - T4 Gb
II 2G	Ex c d IIC T6 - T4 Gb	II 2D	Ex c tb IIIC T80°C - T190°C Db IP6X	II 2D	Ex c tb IIIC T80°C - T190°C Db IP6X

Liquid temperature Exia max. 180°C / Exd max. 120°C

Type of protection intrinsic safety Ex ia IIC switch or temperature switch	I_i ≤ 100 mA		
Type of protection intrinsic safety Ex ia IIC temperature probe	U_i ≤ 28 V	I_i ≤ 100 mA	P_i ≤ 700 mW
Type of protection intrinsic safety Ex ia IIC with option /N (NAMUR EN 60947)	U_i ≤ 15 VDC	I_i ≤ 60 mA	
Type of protection „flameproof enclosure“	U_N ≤ 250 VDC/AC	P_{SN} ≤ 50 W/VA	P_{FN} ≤ 700 mW
Type of protection „flameproof enclosure“ with option /N (NAMUR EN 60947)	U_N ≤ 15 VDC	I_N ≤ 60 mA	
Type of protection „flameproof enclosure“ with option /R22 (resistor)	U_N ≤ 250 VDC/AC	I_N ≤ 100 mA	P_V ≤ 0.21 W

Further electrical connections page 110 - 111
Further process connection according to type key page 62
Further floats page 106 - 111

The magnetic float switches are based on a modular design and can be arranged individually.
Type key page 62 - 65

* = The approval is dependent on the equipment combination

Heinrich Kübler AG
Ruessenstrasse 4 | CH-6340 Baar | Phone +41 (0)41 766 62 62 | Fax +41 (0)41 766 62 63 | E-Mail info@kubler.ch | Internet www.kubler.ch

Type	AVA/VEEC/FE-50/16/B1-VEEC/..-L../11-1/SVEECKA45/14/A	AVA/VEEC/FE-80/16/B1-VEEC/..-L../17-1/SVEECA73/23/V
Material quality:	Stainless steel ECTFE coated	Stainless steel ECTFE coated
Electrical connection:	AVA Stainless steel terminal box	AVA Stainless steel terminal box
Process connection:	Flange EN DN 50 / PN 16 / Form B1	Flange EN DN 80 / PN 16 / Form B1
Guide tube:	Ø 11 mm	Ø 17 mm
Length of instrument:	≤ 3000 mm	≤ 3000 mm
Float:	SVEECKA45/14/A Ø 45 mm	SVEECA73/23/V Ø 73 mm
Specific gravity:	≥ 950 kg/m³	≥ 750 kg/m³
Design pressure:	-1 bar ... 16 bar (depending on temperature)	-1 bar ... 16 bar (depending on temperature)
Design temperature:	-30°C ... 150°C	-30°C ... 150°C
Ingress protection class:	IP 67	IP 67
Mounting position:	Vertical +/-30°	Vertical +/-30°
Level switch function		
Function:	Normally open (NO) / S	Normally open (NO) / S
Switching capacity:	230 V / 1.0 A / 100 VA	230 V / 1.0 A / 100 VA
Maximal number of contacts:	3 pieces	5 pieces
Function:	Normally closed (NC) / O	Normally closed (NC) / O
Switching capacity:	230 V / 0.5 A / 40 VA	230 V / 0.5 A / 40 VA
Maximal number of contacts:	3 pieces	5 pieces
Function:	Change over (SPDT) / U	Change over (SPDT) / U
Switching capacity:	230 V / 0.5 A / 40 VA	230 V / 0.5 A / 40 VA
Maximal number of contacts:	3 pieces	4 pieces
Option temperature probe / Page 112		
Temperature probe:	Pt-100 / Pt-1000	Pt-100 / Pt-1000
Norm:	IEC 751 Kl.B	IEC 751 Kl.B
Option temperature switch / Page 112		
Function:	Normally closed (NC) or normally open (NO)	Normally closed (NC) or normally open (NO)
Switching capacity:	Page 112	Page 112
Accuracy / Hysteresis:	Page 112	Page 112
Temperature / Grading:	Page 112	Page 112

Minimum measures

AVA/VEEC/FE-50/16/B1-VEEC/..-L../11-1/SVEECKA45/14/A
L1: ≥ 65 mm
U: 50 mm
Contact distance: ≥ 20 mm
Float distance: ≥ 80 mm

Approvals / Certificates

ATEX / BV / EAC / PED / SIL1 / WHG

Minimum measures

AVA/V/EEC/FE-80/16/B1-VEEC/..-L../19-1/SVEECA73/23/V
L1: ≥ 70 mm
U: 70 mm
Contact distance: ≥ 20 mm
Float distance: ≥ 105 mm

Approvals / Certificates

ATEX / BV / EAC / PED / SIL1 / WHG

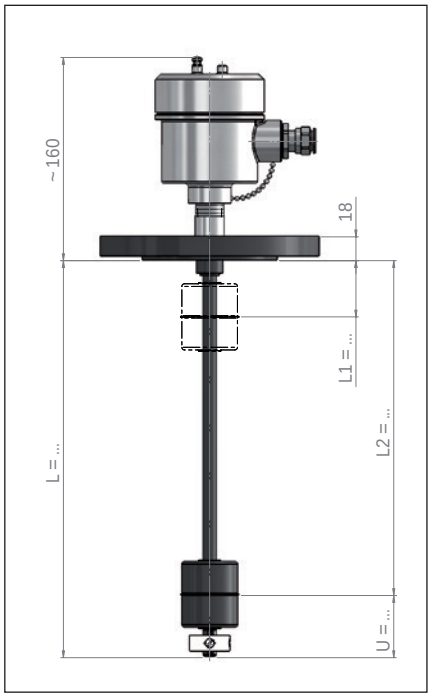

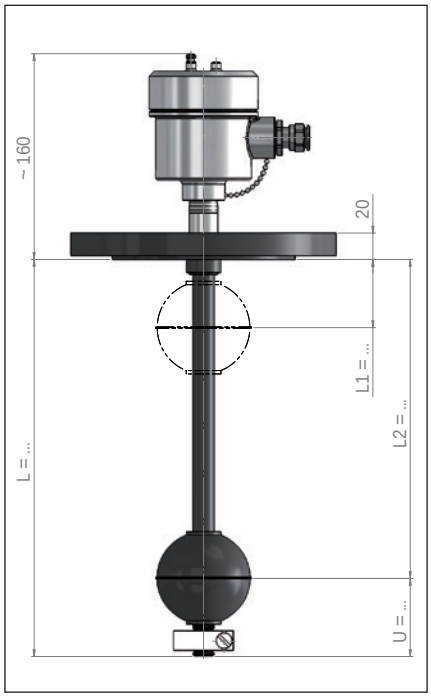

The magnetic float switches are based on a modular design and can be arranged individually.
Type key page 62 - 65

Electrical connection

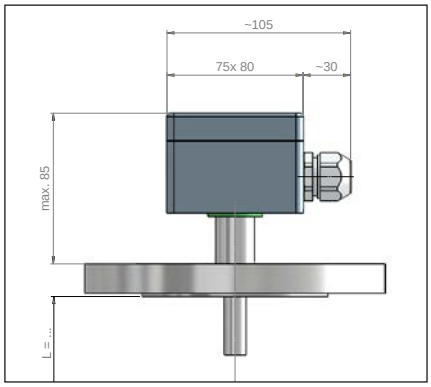

Connection type: APA / APB (Ex)
Material quality: Polyester
Cable entry: M20 x 1.5
Ingress protection class: IP 65
Ambient temperature: -10°C ... 100°C

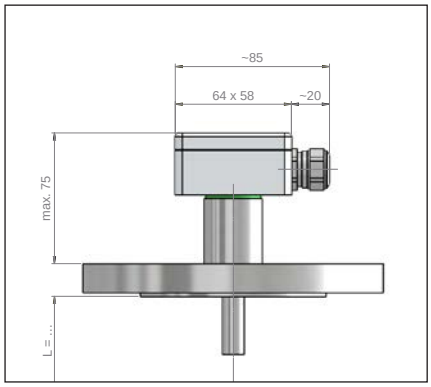

Connection type: ALE
Material quality: Aluminium coated RAL 7001
Cable entry: M20 x 1.5
Ingress protection class: IP 65
Ambient temperature: -40°C ... 100°C

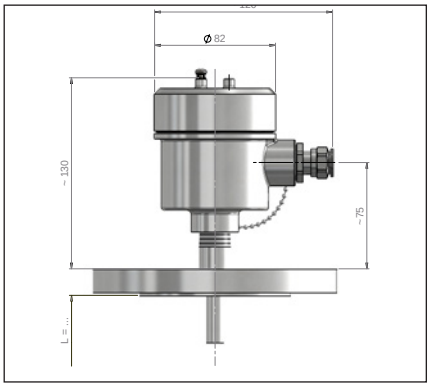

Connection type: AVA / AVDA (Exd)
Material quality: Stainless steel A4 (SS316)
Cable entry: M20 x 1.5
Ingress protection class: IP 67 / (Exd / IP 68)
Ambient temperature: -40°C ... 85°C

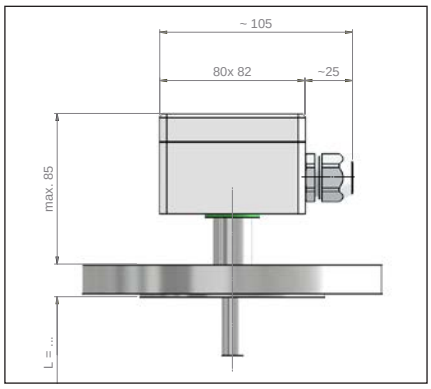

Connection type: ABA
Material quality: ABS
Cable entry: M20 x 1.5
Ingress protection class: IP 65
Ambient temperature: -10°C ... 80°C

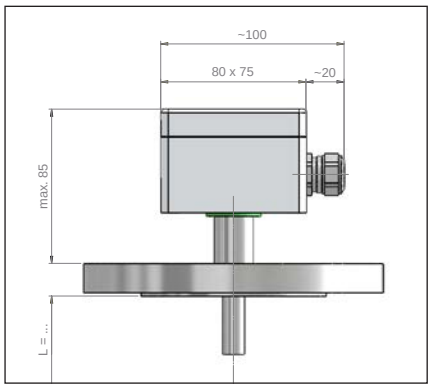

Connection type: ALF
Material quality: Aluminium coated RAL 7001
Cable entry: M20 x 1.5
Ingress protection class: IP 65
Ambient temperature: -40°C ... 100°C

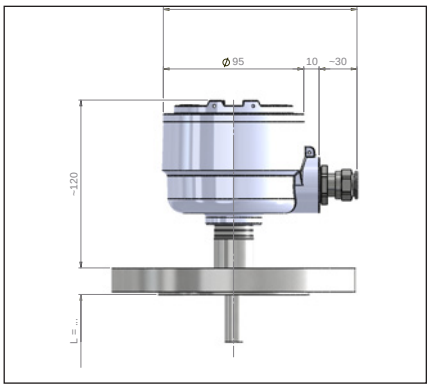

Connection type: ALDA (Exd)
Material quality: Aluminium coated RAL 9006
Cable entry: M20 x 1.5
Ingress protection class: IP 68
Ambient temperature: -40°C ... 100°C

Approvals / Certificates

ATEX*

II 1/2G Ex c ia IIC T6 - T3 bzw. T4 Ga/Gb	II 1/2G Ex c ia IIC T6 - T3 Ga/Gb	II 2G Ex c d IIC T6 - T4 Gb	
II 2G Ex c d IIC T6 - T4 Gb	II 2D Ex c tb IIIC T80°C - T190°C Db IP6X	II 2D Ex c tb IIIC T80°C - T190°C Db IP6X	
Liquid temperature Exia max. 180°C / Exd max. 120°C			
Type of protection intrinsic safety Ex ia IIC switch or temperature switch	I_i ≤ 100 mA		
Type of protection intrinsic safety Ex ia IIC temperature probe	U_i ≤ 28 V	I_i ≤ 100 mA	P_i ≤ 700 mW
Type of protection intrinsic safety Ex ia IIC with option /N (NAMUR EN 60947)	U_i ≤ 15 VDC	I_i ≤ 60 mA	
Type of protection „flameproof enclosure“	U_N ≤ 250 VDC/AC	P_{SN} ≤ 50 W/VA	P_{FN} ≤ 700 mW
Type of protection „flameproof enclosure“ with option /N (NAMUR EN 60947)	U_N ≤ 15 VDC	I_N ≤ 60 mA	
Type of protection „flameproof enclosure“ with option /R22 (resistor)	U_N ≤ 250 VDC/AC	I_N ≤ 100 mA	P_V ≤ 0.21 W

Further electrical connections page 110 - 111
Further process connection according to type key page 62
Further floats page 106 - 109

The magnetic float switches are based on a modular design and can be arranged individually.
Type key page 62 - 65

* = The approval is dependent on the equipment combination

Heinrich Kübler AG
Ruessenstrasse 4 | CH-6340 Baar | Phone +41 (0)41 766 62 62 | Fax +41 (0)41 766 62 63 | E-Mail info@kubler.ch | Internet www.kubler.ch

Type	AVA/VPFA/FE-50/16/B1-VPFA/..-L../11-1/SVPFAKA45/14/A	AVA/VPFA/FE-80/16/B1-VPFA/..-L../17-1/SVPFAA73/23/V
Material quality:	Stainless steel PFA coated	Stainless steel PFA coated
Electrical connection:	AVA Stainless steel terminal box	AVA Stainless steel terminal box
Process connection:	Flange EN DN 50 / PN 16 / Form B1	Flange EN DN 80 / PN 16 / Form B1
Guide tube:	Ø 11 mm	Ø 17 mm
Length of instrument:	≤ 3000 mm	≤ 3000 mm
Float:	SVPFAKA45/14/A Ø 45 mm	SVPFAA73/23/V Ø 73 mm
Specific gravity:	≥ 1000 kg/m³	≥ 800 kg/m³
Design pressure:	-1 bar ... 16 bar (depending on temperature)	-1 bar ... 16 bar (depending on temperature)
Design temperature:	-30°C ... 180°C (optional 250°C)	-30°C ... 180°C (optional 250°C)
Ingress protection class:	IP 67	IP 67
Mounting position:	Vertical +/-30°	Vertical +/-30°
Level switch function		
Function:	Normally open (NO) / S	Normally open (NO) / S
Switching capacity:	230 V / 1.0 A / 100 VA	230 V / 1.0 A / 100 VA
Maximal number of contacts:	3 pieces	5 pieces
Function:	Normally closed (NC) / O	Normally closed (NC) / O
Switching capacity:	230 V / 0.5 A / 40 VA	230 V / 0.5 A / 40 VA
Maximal number of contacts:	3 pieces	5 pieces
Function:	Change over (SPDT) / U	Change over (SPDT) / U
Switching capacity:	230 V / 0.5 A / 40 VA	230 V / 0.5 A / 40 VA
Maximal number of contacts:	3 pieces	4 pieces
Option temperature probe / Page 112		
Temperature probe:	Pt-100 / Pt-1000	Pt-100 / Pt-1000
Norm:	IEC 751 Kl.B	IEC 751 Kl.B
Option temperature switch / Page 112		
Function:	Normally closed (NC) or normally open (NO)	Normally closed (NC) or normally open (NO)
Switching capacity:	Page 112	Page 112
Accuracy / Hysteresis:	Page 112	Page 112
Temperature / Grading:	Page 112	Page 112

Minimum measures

AVA/VPFA/FE-50/16/B1-VPFA/..-L../11-1/SVPFAKA45/14/A
L1: ≥ 65 mm
U: 50 mm
Contact distance: ≥ 20 mm
Float distance: ≥ 80 mm

Approvals / Certificates

ATEX / EAC / PED / SIL1

Minimum measures

AVA/VPFA/FE-80/16/B1-VPFA/..-L../19-1/SVPFAA73/23/V
L1: ≥ 70 mm
U: 70 mm
Contact distance: ≥ 20 mm
Float distance: ≥ 105 mm

Approvals / Certificates

ATEX / EAC / PED / SIL1

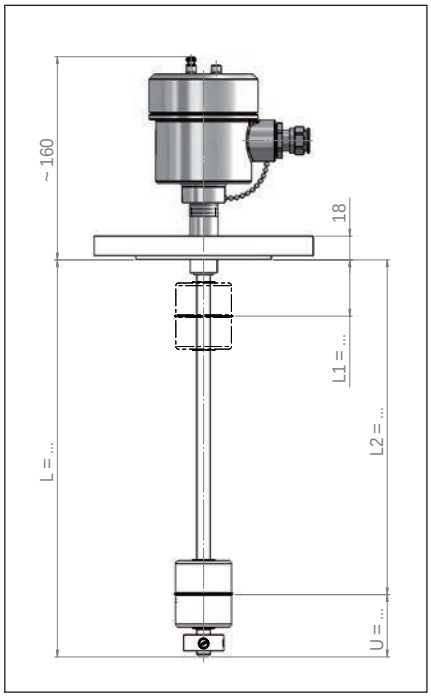

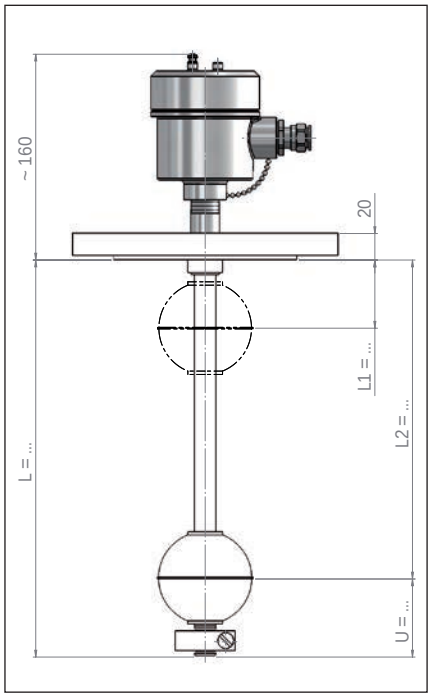

The magnetic float switches are based on a modular design and can be arranged individually.
Type key page 62 - 65

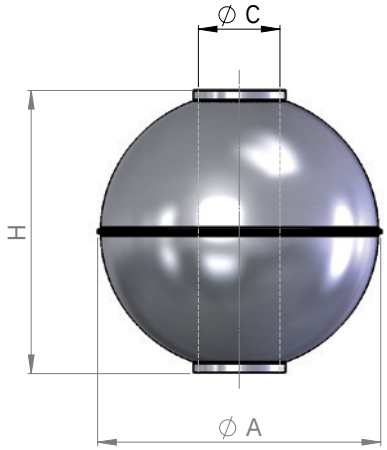

Type	Material quality	ø A	H	ø C	Min. Specific gravity	Min. / Max. Design pressure	Min. / Max. Design temperature	Min. L1	Min. U	Min. Float distance	Weight
		mm	mm	mm	kg/m³	bar	°C	mm	mm	mm	g
SV29/9/A	Stainless steel	29	28	9,4	900	-1 ... 35	-156 ... 200	35	30	45	7
SV42/9/A	Stainless steel	42	42	9,4	650	-1 ... 15	-156 ... 200	45	40	60	19
SV52/15/A	Stainless steel	52	52	15	680	-1 ... 30*	-156 ... 250	55	45	70	35
SVS52/15/A	Stainless steel	52	52	15	750	-1 ... 50*	-156 ... 250	55	45	70	40
SV62/15/A	Stainless steel	62	62	15	630	-1 ... 25*	-156 ... 250	60	50	80	60
SV72/15/V	Stainless steel	72	71,5	15	530	-1 ... 25*	-156 ... 250	65	50	90	83
SV/82/15/A	Stainless steel	82	81	15	400	-1 ... 25*	-156 ... 250	70	55	100	88
SV72/24/V	Stainless steel	72	70	24,4	620	-1 ... 25*	-156 ... 250	60	60	90	86
SV80/23/A	Stainless steel	80	75	23	630	-1 ... 25*	-156 ... 250	70	60	95	114
SV3A80/23/V	Stainless steel	80	73	23	750	-1 ... 40*	-156 ... 250	50	55	100	145
SV98/23/A	Stainless steel	98	96	23	570	-1 ... 25*	-156 ... 250	80	70	115	222
STI29/9/A	Titanium	29	28	9,4	700	-1 ... 15	-10 ... 150	35	30	45	6
STIS44/12/V	Titanium	44	44	12	780	-1 ... 100*	-10 ... 250	50	40	60	25
STI52/14/A	Titanium	52	52	14	650	-1 ... 24	-10 ... 150	55	45	70	35
STIS52/15/V	Titanium	52	52	15	780	-1 ... 150*	-10 ... 250	55	45	70	42
STI62/14/V	Titanium	62	62	14	450	-1 ... 25	-10 ... 150	60	50	80	41
STI82/14/V	Titanium	82	80	14	500	-1 ... 16	-10 ... 150	70	55	100	108
STI80/24/A	Titanium	80	76	24	600	-1 ... 16	-10 ... 150	70	60	95	103
SHC52/15/A	Alloy C	52	52	15	1260	-1 ... 55*	-196 ... 250	55	45	70	68
SHC62/15/V	Alloy C	62	62	15	700	-1 ... 25*	-196 ... 250	60	50	80	65
SHC82/15/V	Alloy C	82	81	15	500	-1 ... 16*	-196 ... 250	70	55	100	95
SHC72/24/V	Alloy C	72	70	24,4	830	-1 ... 25*	-196 ... 250	60	60	90	116
SHC80/23/V	Alloy C	80	75	23	730	-1 ... 18*	-196 ... 250	70	60	95	125
SHC98/23/V	Alloy C	98	96	23	550	-1 ... 16*	-196 ... 250	80	70	115	208
SVEECA53/14/A	ECTFE coated	53	53	14	900	-1 ... 40	-78 ... 150	70	70	80	49
SVEECB53/14/A**	ECTFE coated	53	53	14	900	-1 ... 40	-78 ... 150	70	70	80	49
SVEECA73/23/V	ECTFE coated	73	71	23	750	-1 ... 25	-78 ... 150	70	70	105	105
SVEECB73/23/V**	ECTFE coated	73	71	23	750	-1 ... 25	-78 ... 150	70	70	105	105
SVPFAA53/14/A	PFA coated	53	53	14	950	-1 ... 40*	-100 ... 250	70	70	80	52
SVPFAB53/14/A**	PFA coated	53	53	14	950	-1 ... 40*	-100 ... 250	70	70	80	52
SVPFAA73/23/V	PFA coated	73	71	23	800	-1 ... 25*	-100 ... 250	70	70	105	110
SVPFAB73/23/V**	PFA coated	73	71	23	800	-1 ... 25*	-100 ... 250	70	70	105	110

The magnetic float switches are based on a modular design and can be arranged individually.
Type key page 62 - 65

* = Design temperature 200°C, higher temperatures after calculating / ** = acc. to Atex (conductive)

Heinrich Kübler AG
Ruessenstrasse 4 | CH-6340 Baar | Phone +41 (0)41 766 62 62 | Fax +41 (0)41 766 62 63 | E-Mail info@kubler.ch | Internet www.kubler.ch

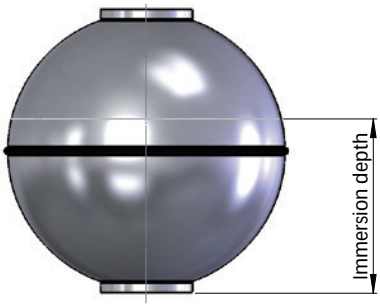

Type	Specific gravity kg/m³											
	400	500	600	700	800	900	1000	1100	1200	1300	1400	1500
	Immersion depth in mm											
SV29/9/A						20,3	18,5	17,2	16,2	15,3	14,6	14,0
SV42/9/A				31,1	27,4	25,0	23,1	21,6	20,4	19,4	18,5	17,7
SV52/15/A				38,6	34,1	31,1	28,8	27,0	25,5	24,2	23,1	22,2
SVS52/15/A					38,6	34,5	31,7	29,6	27,8	26,4	25,1	24,1
SV62/15/A				40,8	36,7	33,7	31,4	29,2	27,9	26,6	25,4	24,4
SV72/15/V			51,1	44,8	40,5	37,3	34,8	32,8	31,0	29,6	28,3	27,2
SV/82/15/A	61,3	50,3	44,1	39,7	36,5	33,9	31,8	30,1	28,6	27,3	26,2	25,2
SV72/24/V				50,5	45,2	41,4	38,6	36,2	34,3	32,7	31,3	30,1
SV80/23/A				56,2	49,9	45,6	42,3	39,7	37,5	35,7	34,1	32,8
SV3A80/23/V					54,5	49,7	46,0	43,1	40,7	38,7	37,0	35,5
SV98/23/A			75,8	65,2	58,6	53,8	50,1	47,1	44,5	42,4	40,5	38,9
STI29/9/A				21,9	19,3	17,5	16,3	15,2	14,4	13,7	13,1	12,6
STIS44/12/V					34,0	30,0	27,5	25,6	24,0	22,7	21,7	20,7
STI52/14/A				39,1	34,4	31,3	29,0	27,1	25,6	24,3	23,3	22,3
STIS52/15/V					40,9	36,1	33,0	30,6	28,8	27,2	25,9	24,8
STI62/14/V		41,9	36,2	32,5	29,7	27,6	25,9	24,5	23,2	22,2	21,3	20,5
STI82/14/V		60,1	51,2	45,7	41,7	38,6	36,1	34,0	32,3	30,8	29,5	28,3
STI80/24/A			60,4	51,8	46,6	42,8	39,9	37,5	35,6	33,9	32,4	31,2
SHC52/15/A										40,7	37,5	35,1
SHC62/15/V				48,0	42,0	38,1	35,2	33,0	31,1	29,5	28,2	27,0
SHC82/15/V		53,5	46,5	41,8	38,3	35,6	33,3	31,5	29,9	28,6	27,4	26,3
SHC72/24/V						53,0	48,1	44,5	41,8	39,5	37,6	36,0
SHC80/23/V				62,5	54,0	48,9	45,1	42,2	39,8	37,8	36,1	34,6
SHC98/23/V			70,7	61,8	55,9	51,5	48,0	45,2	42,8	40,7	39,0	37,4
SVEECA53/14/A						39,6	36,7	33,0	30,9	29,2	27,7	26,5
SVEECB53/14/A**						39,6	36,7	33,0	30,9	29,2	27,7	26,5
SVEECA73/23/V				59,8	51,5	46,5	43,0	40,2	37,9	36,0	34,4	33,0
SVEECB73/23/V**				59,8	51,5	46,5	43,0	40,2	37,9	36,0	34,4	33,0
SVPFAA53/14/A							37,7	34,6	32,3	30,4	28,9	27,6
SVPFAB53/14/A**							37,7	34,6	32,3	30,4	28,9	27,6
SVPFAA73/23/V					54,4	48,7	44,8	41,8	39,3	37,3	35,6	34,1
SVPFAB73/23/V**					54,4	48,7	44,8	41,8	39,3	37,3	35,6	34,1

The magnetic float switches are based on a modular design and can be arranged individually.
Type key page 62 - 65

* = Design temperature 200°C, higher temperatures after calculating / ** = acc. to Atex (conductive)

Magnetic Float Switches / Cylindrical float

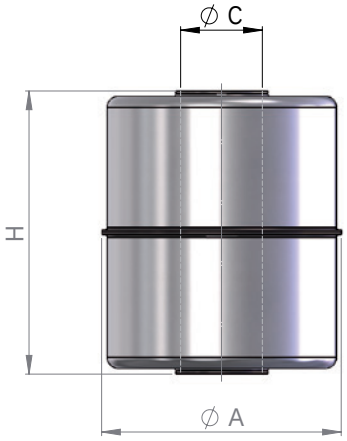

Type	Material quality	ø A	H	ø C	Min. Specific gravity	Min. / Max. Design pressure	Min. / Max. Design temperature	Min. L1	Min. U	Min. Float distance	Weight
		mm	mm	mm	kg/m³	bar	°C	mm	mm	mm	g
SVK27/10/A	Stainless steel	27	31	10	800	-1 ... 6	-156 ... 200	30	30	45	7,8
SVK44/15/A	Stainless steel	44	52	15	800	-1 ... 25*	-156 ... 250	50	45	70	43
STIK44/14/A	Titanium	44	52	14	750	-1 ... 15	-10 ... 150	50	45	70	37
SHCK44/15/V	Alloy C	44	52	15	1000	-1 ... 6	-196 ... 250	50	45	70	52
SB18/11/A	NBR	18	25	11	800	-1 ... 6	-20 ... 80	15	40	40	2,5
SB20/9/A	NBR	19,5	20	8,4	850	-1 ... 6	-20 ... 80	15	35	35	3,3
SB23/9/A	NBR	23	25	8,4	800	-1 ... 6	-20 ... 80	15	40	40	5
SB25/9/A	NBR	25	14	9	800	-1 ... 6	-20 ... 80	15	30	30	3,5
SB30/13/A	NBR	30	45	13	700	-1 ... 6	-20 ... 80	20	65	60	14
SB40/15/A	NBR	40	30	15	700	-1 ... 6	-20 ... 80	25	50	45	17
SB50/20/A	NBR	50	45	20	700	-1 ... 6	-20 ... 80	30	70	60	41
SPK42/14/A	PVC	42	44	14	800	-1 ... 1	-15 ... 60	50	40	65	32
SPK54/22/A	PVC	54	55	22	750	-1 ... 1	-15 ... 60	65	50	75	64
SPK78/25/A	PVC	78	80	25	600	-1 ... 1	-15 ... 60	80	65	100	164
SPPK28/9/A	PP	28	29	9	800	-1 ... 1	-10 ... 80	35	35	45	9
SPPK44/13/A	PP	44	43	13	700	-1 ... 1	-10 ... 80	50	40	65	25
SPPK44/21/A	PP	44	69	21	800	-1 ... 1	-10 ... 80	50	55	90	45
SPPK56/21/A	PP	56	54	21	600	-1 ... 1	-10 ... 80	65	50	75	50
SPPK80/24/A	PP	80	79	24	500	-1 ... 1	-10 ... 80	80	65	100	126
SPFK44/13/A	PVDF	44	55	13	850	-1 ... 1	-10 ... 100	50	55	70	46
SPFK56/21/A	PVDF	56	69	21	800	-1 ... 1	-10 ... 100	65	60	90	90
SPFK80/24/A	PVDF	80	79	24	700	-1 ... 1	-10 ... 100	80	65	100	192
SVEECKA45/14/A	ECTFE coated	45	53	14	950	-1 ... 25	-78 ... 150	70	70	80	54
SVEECKB45/14/A**	ECTFE coated	45	53	14	950	-1 ... 25	-78 ... 150	70	70	80	54
SVPFAKA45/14/A	PFA coated	45	53	14	1000	-1 ... 25*	-100 ... 250	70	70	80	57
SVPFAKB45/14/A**	PFA coated	45	53	14	1000	-1 ... 25*	-100 ... 250	70	70	80	57

The magnetic float switches are based on a modular design and can be arranged individually.
Type key page 62 - 65

* = Design temperature 200°C, higher temperatures after calculating / ** = acc. to Atex (conductive)

Heinrich Kübler AG
Ruessenstrasse 4 | CH-6340 Baar | Phone +41 (0)41 766 62 62 | Fax +41 (0)41 766 62 63 | E-Mail info@kubler.ch | Internet www.kubler.ch

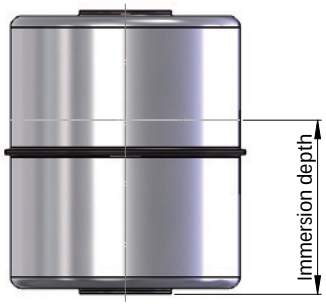

Type	Specific gravity kg/m³											
	400	500	600	700	800	900	1000	1100	1200	1300	1400	1500
	Immersion depth in mm											
SVK27/10/A					23,6	21,0	18,9	17,2	15,8	14,6	13,5	12,6
SVK44/15/A					44,5	39,5	35,6	32,3	29,6	27,4	25,4	23,7
STIK44/14/A					37,6	33,4	30,0	27,3	25,0	23,1	21,5	20,0
SHCK44/15/V							43,0	39,1	35,9	33,1	30,7	28,7
SB18/11/A					19,6	17,4	15,7	14,3	13,1	12,1	11,2	10,5
SB20/9/A						15,2	13,6	12,4	11,3	10,5	9,7	9,1
SB23/9/A					17,4	15,4	13,9	12,6	11,6	10,7	9,9	9,3
SB25/9/A					10,2	9,1	8,2	7,4	6,8	6,3	5,9	5,5
SB30/13/A				34,8	30,5	27,1	24,4	22,2	20,3	18,8	17,4	16,3
SB40/15/A				22,5	19,7	17,5	15,7	14,3	13,1	12,1	11,1	10,5
SB50/20/A				35,5	31,1	27,6	24,9	22,6	20,7	19,1	17,8	16,6
SPK42/14/A					32,5	28,9	26,0	23,6	21,7	20,0	18,6	17,3
SPK54/22/A					41,9	37,2	33,5	30,5	27,9	25,8	23,9	22,3
SPK78/25/A			63,8	54,6	47,8	42,5	38,3	34,8	31,9	29,4	27,3	25,5
SPPK28/8/A					24,1	21,4	19,3	17,5	16,0	14,8	13,8	12,8
SPPK44/13/A				29,0	25,4	22,6	20,3	18,5	16,9	15,6	14,5	13,5
SPPK44/21/A					56,0	49,7	44,8	40,7	37,3	34,4	32,0	29,8
SPPK56/21/A			43,6	37,4	32,7	29,1	26,2	23,8	21,8	20,1	18,7	17,5
SPPK80/24/A		58,8	49,0	42,0	36,7	32,7	29,4	26,7	24,5	22,6	21,0	19,6
SPFK44/13/A						41,5	37,4	34,0	31,1	28,7	26,7	24,9
SPFK56/21/A					58,9	52,4	47,1	42,8	39,3	36,2	33,7	31,4
SPFK80/24/A				64,0	56,0	49,8	44,8	40,7	37,3	34,4	32,0	29,9
SVEECKA45/14/A							41,6	37,8	34,7	32,0	29,7	27,7
SVEECKB45/14/A**							41,6	37,8	34,7	32,0	29,7	27,7
SVPFAKA45/14/A							43,9	39,9	36,6	33,8	31,4	29,3
SVPFAKB45/14/A**							43,9	39,9	36,6	33,8	31,4	29,3

The magnetic float switches are based on a modular design and can be arranged individually.
Type key page 62 - 65

* = Design temperature 200°C, higher temperatures after calculating / ** = acc. to Atex (conductive)

Magnetic Float Switches / Electrical connection

Electrical connection

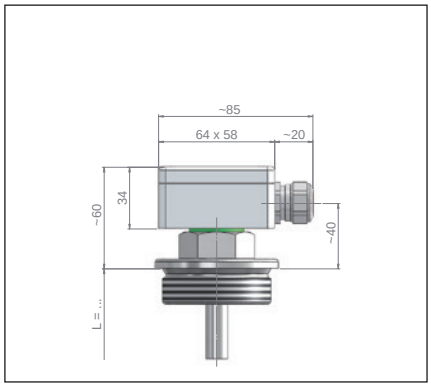

Connection type: ALE
Material quality: Aluminium coated RAL 7001
Cable entry: M20 x 1.5
Ingress protection class: IP 65
Ambient temperature: -40°C ... 100°C
Maximal number of contact clamps: 8

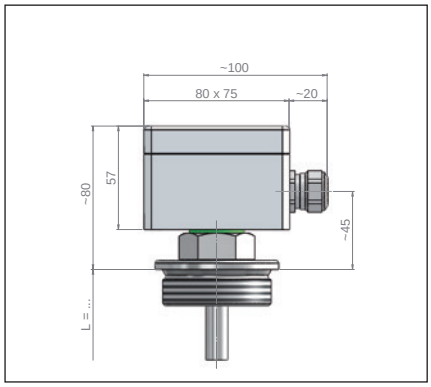

Connection type: ALF
Material quality: Aluminium coated RAL 7001
Cable entry: M20 x 1.5
Ingress protection class: IP 65
Ambient temperature: -40°C ... 100°C
Maximal number of contact clamps: 12

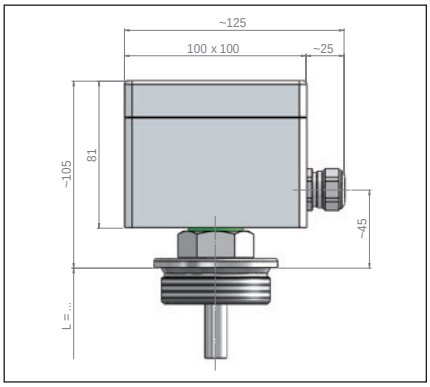

Connection type: ALG
Material quality: Aluminium coated RAL 7001
Cable entry: M20 x 1.5
Ingress protection class: IP 65
Ambient temperature: -40°C ... 100°C
Maximal number of contact clamps: 24

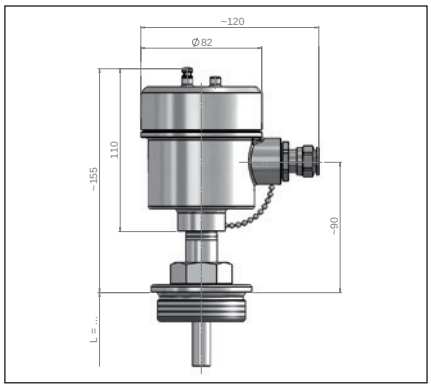

Connection type: AVA / AVDA (Exd)
Material quality: Stainless steel A4 (SS316)
Cable entry: M20 x 1.5
Ingress protection class: IP 67 / (Exd / IP 68)
Ambient temperature: -40°C ... 85°C
Maximal number of contact clamps: 12

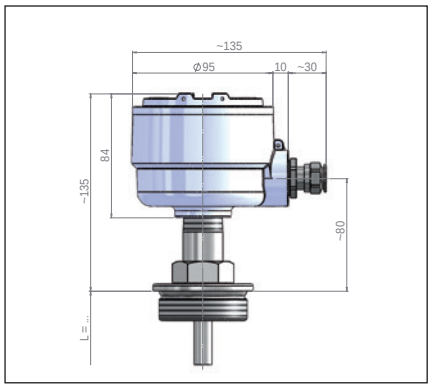

Connection type: ALDA (Exd)
Material quality: Aluminium coated RAL 9006
Cable entry: M20 x 1.5
Ingress protection class: IP 68
Ambient temperature: -40°C ... 100°C
Maximal number of contact clamps: 12

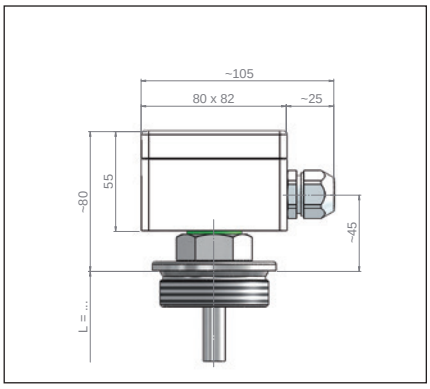

Connection type: ABA
Material quality: ABS
Cable entry: M20 x 1.5
Ingress protection class: IP 65
Ambient temperature: -10°C ... 80°C
Maximal number of contact clamps: 12

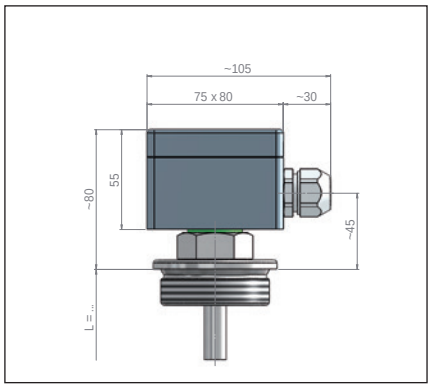

Connection type: APA / APB (Ex)
Material quality: Polyester
Cable entry: M20 x 1.5
Ingress protection class: IP 65
Ambient temperature: -10°C ... 100°C
Maximal number of contact clamps: 12

The magnetic float switches are based on a modular design and can be arranged individually.
Type key page 62 - 65

Heinrich Kübler AG
Ruessenstrasse 4 | CH-6340 Baar | Phone +41 (0)41 766 62 62 | Fax +41 (0)41 766 62 63 | E-Mail info@kubler.ch | Internet www.kubler.ch

Electrical connection

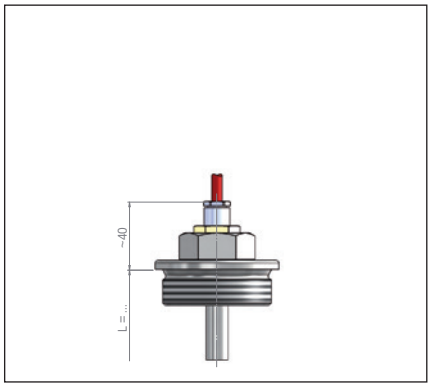

Connection type: K
Material quality: According as cable type
Cable entry: PG or metric
Ingress protection class: IP 55 (optional IP 68)
Ambient temperature: -40°C ... 200°C
Maximal number of contact clamps: -

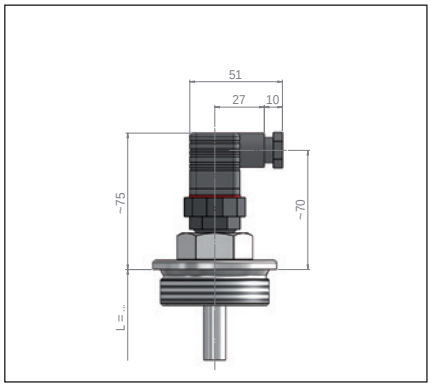

Connection type: ASH
Material quality: PA
Cable entry: M16
Ingress protection class: IP 65
Ambient temperature: -40°C ... 125°C
Maximal number of contact clamps: 3

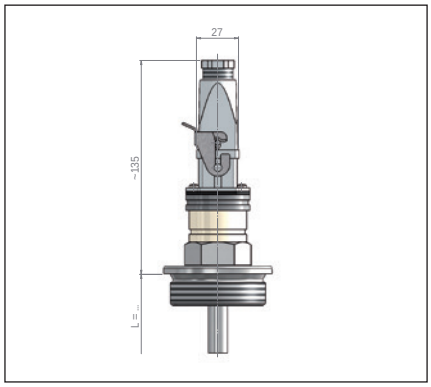

Connection type: ASHAA / ASHBA (Aluminium)
Material quality: Plastic / Aluminium
Cable entry: M20
Ingress protection class: IP 65
Ambient temperature: -10°C ... 80°C
Maximal number of contact clamps: 6

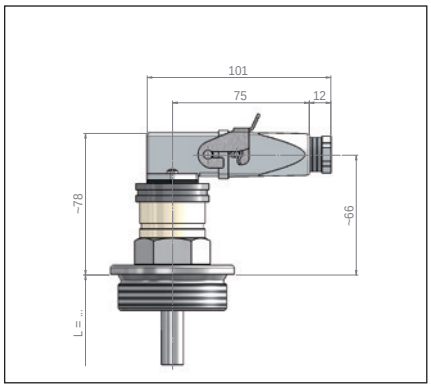

Connection type: ASHAB / ASHBB (Aluminium)
Material quality: Plastic / Aluminium
Cable entry: M20
Ingress protection class: IP 65
Ambient temperature: -10°C ... 80°C
Maximal number of contact clamps: 6

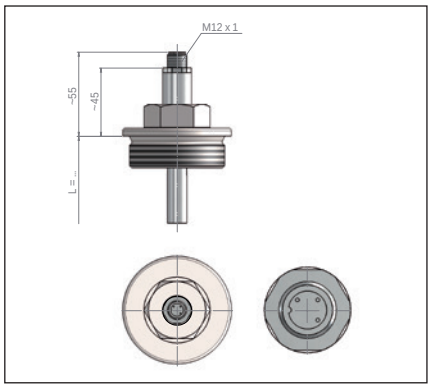

Connection type: ASMA
Material quality: Brass / PA
Connector: M12
Ingress protection class: IP 67
Ambient temperature:-25°C ... 90°C
Maximal number of contact clamps: 3

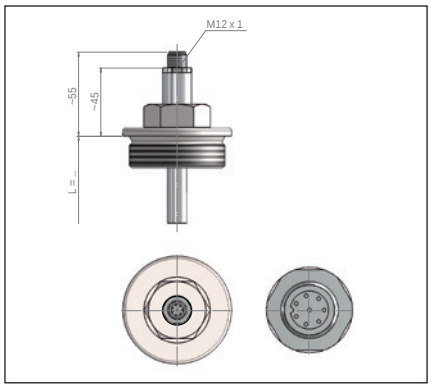

Connection type: ASMB
Material quality: Brass / PA
Connector: M12
Ingress protection class: IP 67
Ambient temperature: -25°C ... 90°C
Maximal number of contact clamps: 8

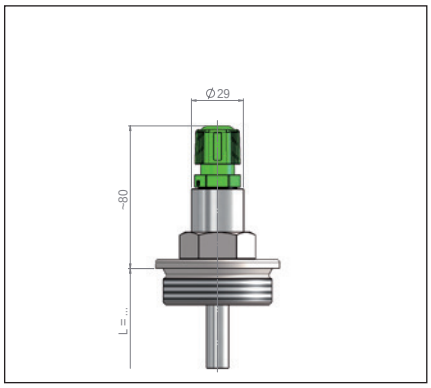

Connection type: ASQ
Material quality: PA
Cable entry: PG11
Ingress protection class:IP 67
Ambient temperature: -25°C ... 85°C
Maximal number of contact clamps: 4

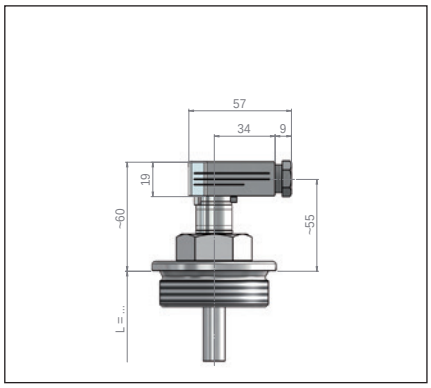

Connection type: ASC
Material quality: Zinc cast
Cable entry: PG9
Ingress protection class: IP 65
Ambient temperature: -10°C ... 125°C
Maximal number of contact clamps: 7

The magnetic float switches are based on a modular design and can be arranged individually.
Type key page 62 - 65

Temperature switch

Type:	TO	TS
Function:	Normally closed (NC)	Normally open (NO)
Switching capacity:	230 V / 0.5 A / 40 VA	230 V / 0.5 A / 40 VA
Temperature / Grading:	50°C ... 160°C / 5 K	80°C ... 160°C / 5 K
Accuracy:	± 5 K	± 5 K
Hysteresis:	30 K ± 15 K	30 K ± 15 K
Guide tube:	≥ Ø 11 mm	≥ Ø 11 mm

Temperature switch - Pepi

Type:	TPO	TPS
Function:	Normally closed (NC)	Normally open (NO)
Switching capacity:	230 V / 0.5 A / 40 VA	230 V / 0.5 A / 40 VA
Temperature / Grading:	30°C ... 120°C / 5 K	30°C ... 120°C / 5 K
Accuracy:	± 3 K	± 3 K
Hysteresis:	± 1 K	± 1 K
Guide tube:	≥ Ø 11 mm	≥ Ø 11 mm
Design temperature:	0°C ... 130°C	0°C ... 130°C

Temperature probe

Type:	TFA	TFB
Probe:	Pt 100	Pt 1000
Nominal response temperature:	-70°C ... 400°C	-70°C ... 400°C
Tolerance class:	B	B
Performance:	Acc. to IEC 751	Acc. to IEC 751
Connection:	2- / 3- or 4-wire	2- / 3- or 4-wire
Guide tube:	≥ Ø 8 mm	≥ Ø 8 mm

Connection cable

Type	Material quality	Max. Ambient temperature
PVC	PVC connection cable	-20°C ... 80°C
PVCB	PVC connection cable with blue coating	-20°C ... 80°C
SIL	Silicon connection cable	-60°C ... 180°C
PUR	PUR connection cable	-40°C ... 80°C
RAD	Radox connection cable	-35°C ... 120°C
FTEF	Teflon strands	-65°C ... 200°C
FPVC	PVC strands	-5°C ... 70°C

The magnetic float switches are based on a modular design and can be arranged individually.
Type key page 62 - 65

Heinrich Kübler AG
Ruessenstrasse 4 | CH-6340 Baar | Phone +41 (0)41 766 62 62 | Fax +41 (0)41 766 62 63 | E-Mail info@kubler.ch | Internet www.kubler.ch

Connection diagram

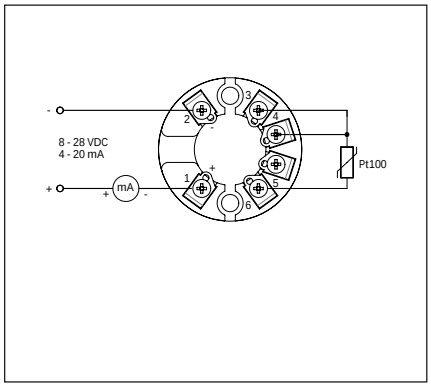

Control unit TD5333..

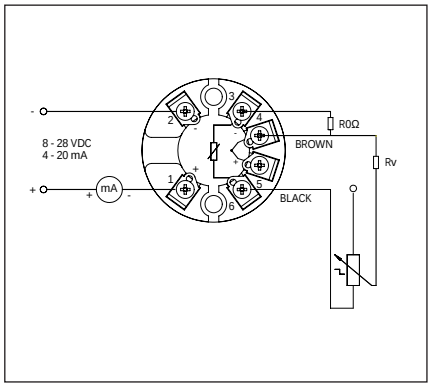

Control unit TD5335..

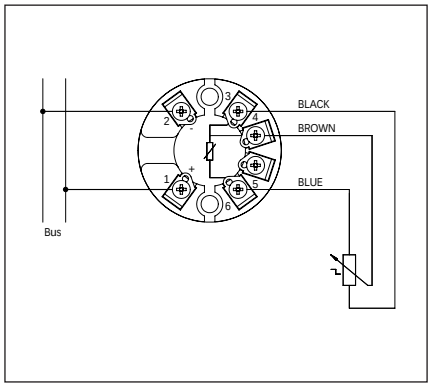

Control unit TP5350..

Some further data according to chapter Control Units 1011

Lateral recording and controlling of fluid levels

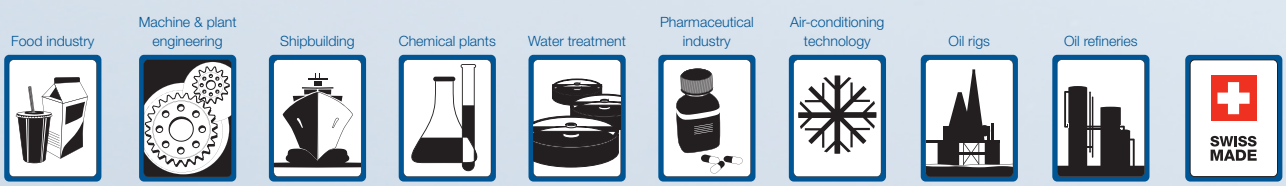

1003-h

MAGNETIC FLOAT SWITCHES
HORIZONTAL

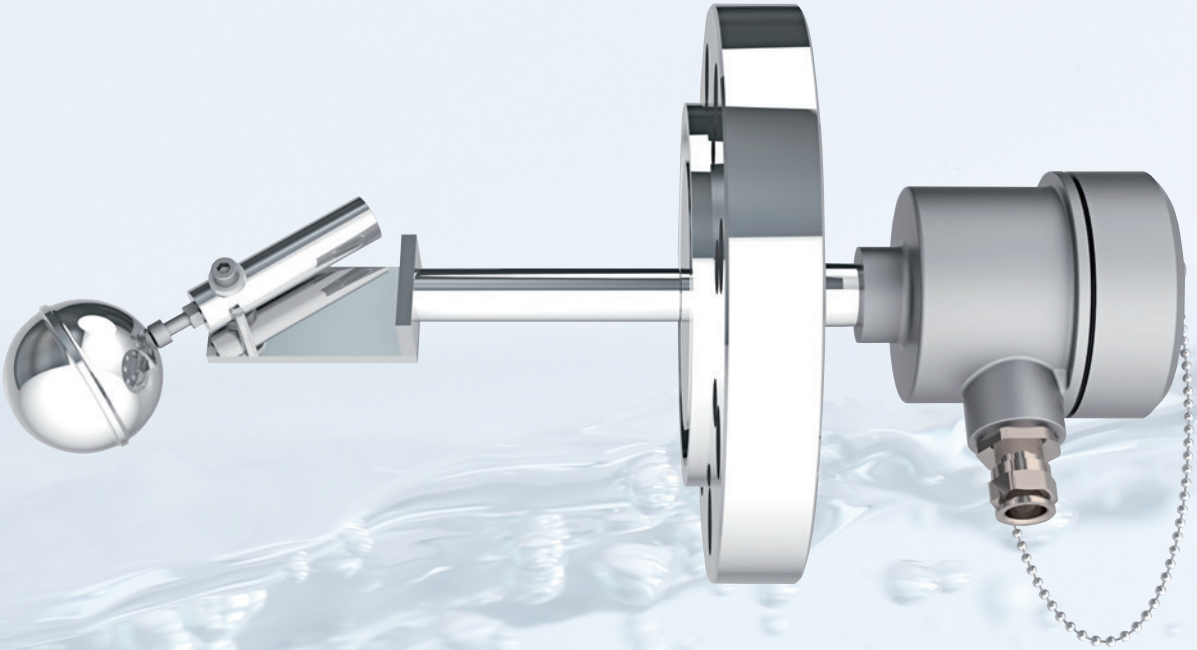

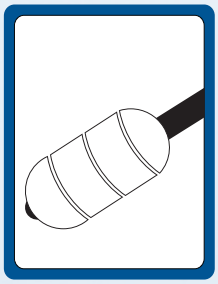

Table of content

Magnetic Float Switches Horizontal / Content 116
Magnetic Float Switches Horizontal / Functional description 117
Magnetic Float Switches Horizontal / Type key 118
Magnetic Float Switches Horizontal / Type key 119
Magnetic Float Switches Horizontal / Type key 120
Magnetic Float Switches Horizontal / Notes 121
Magnetic Float Switches Horizontal / 122
Magnetic Float Switches Horizontal / Stainless steel 123
Magnetic Float Switches Horizontal / Stainless steel 124
Magnetic Float Switches Horizontal / with test function 125
Magnetic Float Switches Horizontal / Titanium / Alloy C 126
Magnetic Float Switches Horizontal / coated 127
Magnetic Float Switches Horizontal / 128
Magnetic Float Switches Horizontal / PVC 129
Magnetic Float Switches Horizontal / Polypropylene 130
Magnetic Float Switches Horizontal / PVDF 131
Magnetic Float Switches Horizontal - Mini / Stainless steel 132
Magnetic Float Switches Horizontal - Mini / Polyamide 133
Magnetic Float Switches Horizontal - Mini / Polypropylene 134
Magnetic Float Switches Horizontal / Floats 135
Magnetic Float Switches Horizontal / Electrical connection 136
Magnetic Float Switches Horizontal / Temperature sensor 137
Magnetic Float Switches Horizontal / Connection cable 137

Heinrich Kübler AG
Ruessenstrasse 4 | CH-6340 Baar | Phone +41 (0)41 766 62 62 | Fax +41 (0)41 766 62 63 | E-Mail info@kubler.ch | Internet www.kubler.ch

Functional description

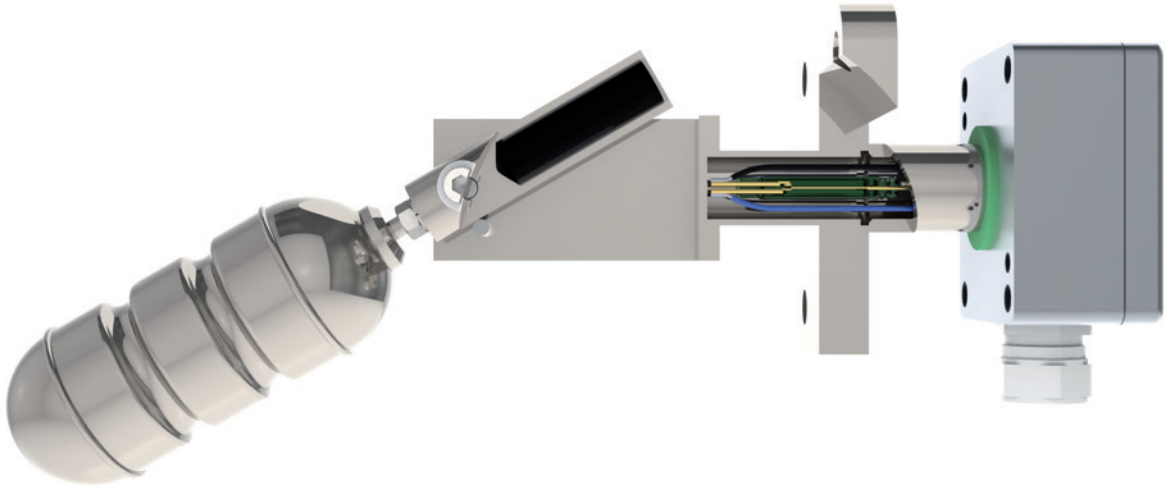

Functional description

The horizontal magnetic float switches work with reed contact (protective gas contact).
The activation of the reed contacts by the magnetic field of a permanent magnet located at the float intake is triggered in a completely wear-free and contact-free way.
The only moving component of the horizontal magnetic float switch is the float system as a whole.

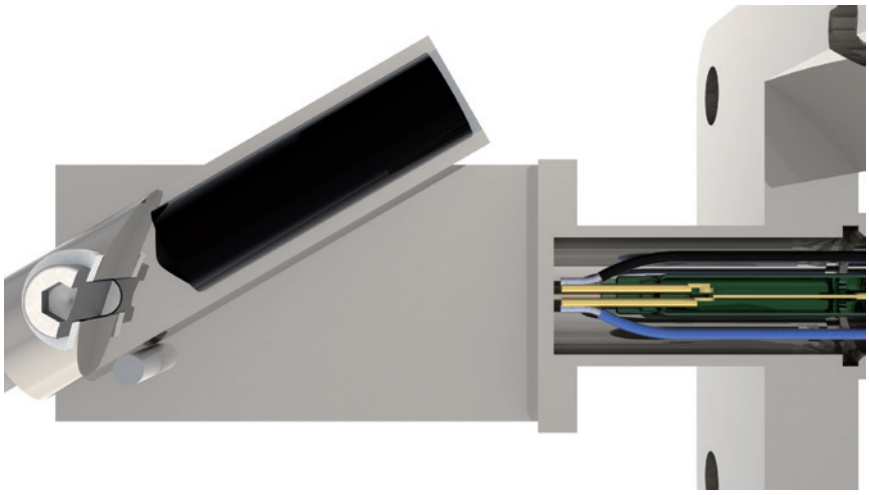

Areas of application

Horizontal magnetic float switches are used for the monitoring and the controlling of liquid media and they may be installed into vessels and tanks which meet the technical requirements, i.e. which are designed for the according operating parameters. Due to the potential-free reed contacts the magnetic float switches form an ideal switching element in connection with PLC controlling.

Design limits

Specific gravity:	≥ 350 kg/m³
Design pressure:	-1 bar ... 140 bar
Design temperature:	-30°C ... 250°C

Magnetic Float Switches Horizontal / Type key

Code 1

	Key 1 … - **Version**
HS[1]	Horizontal magnetic float switches

Code 2

	Key 1 … / … / … - **Electrical connection**		Key 2 … / … / … - **Process connection material quality**		Key 3 … / … / … - **Process connection**
ALE	Aluminium terminal box 64 x 58 x 34 mm	V[1]	Stainless steel	E[1]	Thread to electrical direction, G/BSP
ALF	Aluminium terminal box 80 x 75 x 57 mm	VP[1]	Stainless steel electropolished / Ra ca. 0,8µm	R[1]	Thread to float direction, G/BSP
ALG	Aluminium terminal box 100 x 100 x 81 mm		(not attestable)	ENPT[1]	Thread to electrical direction, NPT
ALDA[1]	Aluminium terminal box Ø 95 x 84 mm	TI[1]	Titanium	RNPT[1]	Thread to float direction, NPT
AVA	Stainless steel terminal box Ø 82 x 110 mm	HC[1]	Alloy C	EM[1]	Thread to electrical direction, metric
AVDA[1]	Stainless steel terminal box Ø 82 x 110 mm	VEEC[1]	Stainless steel ECTFE coated	RM[1]	Thread to float direction, metric
APA	Polyester terminal box 80 x 75 x 55 mm	VPFA[1]	Stainless steel PFA coated	FE[1]	Flange according to EN
APB	Polyester terminal box 80 x 75 x 55 mm / Exm	P	PVC	FA[1]	Flange according to ANSI
ABA	ABS terminal box 80 x 82 x 55 mm	PP	Polypropylene	FQ[1]	Square flange
K	Connection cable	PF	PVDF	F[1]	Flange according to …
K68	Connection cable IP 68 (≥ G 3/8“)	PA	Polyamide	FS[1]	Flange according to drawing
ASH	Connector Hirschmann DIN 43650			TC[1]	Try-Clamp according to ISO 2852
ASHAA	Plastic connector HTS straight			BK[1]	Aseptic blind cone according to DIN 11851
ASHAB	Plastic connector HTS angulate			BKN[1]	Aseptic blind cone according to DIN 11851 with groove nut
ASHBA	Aluminium connector HTS straight			BK64[1]	Aseptic blind cone acc. to DIN 11864/1 form A
ASHBB	Aluminium connector HTS angulate			BKN64[1]	Aseptic blind cone acc. to DIN 11864/1 form A with groove nut
ASQ	Quick-On Connector			BKD[1]	Try-Clamp according to DIN 32676
ASMA	Connector M12 3-pins			BKND[1]	Try-Clamp according to DIN 32676 with clamp
ASMB	Connector M12 8-pins				
ASC	Connector C091D 7-pins				

Code 3

	Key 1 … - **Threaded connection**		Key 1 … - **Try-Clamp / Aseptic cone**		Key 1 … - **Square flange**
…	Threaded connection size	…	Nominal size	80[1]	Square flange 80x80x12 mm
				92[1]	Square flange 92x92x15 mm

Code 3

	Key 1.1 (only for flange) … / … / … - **Flange connection**		Key 1.2 (only for flange) … / … / … - **Flange connection**		Key 1.3 (only for flange) … / … / … - **Flange connection**
…	Flange nominal bore	…	Flange pressure rating	…	Flange facing

Example

Code	1		2						3						4						
Key	1	-	1	/	2	/	3	-	1.1	/	1.2	/	1.3	-	1	/	2	/	3	/	4	-
Example	HS	-	ALE	/	V	/	FE	-	50	/	16	/	B1	-	V	/	U	/	R	/	TO	-

Black = not possible according to Atex / Blue = possible according to Atex Exia / Blue[1] = possible according to Atex Exia and Exd / Black[1] = possible according to Atex Exd

Heinrich Kübler AG
Ruessenstrasse 4 | CH-6340 Baar | Phone +41 (0)41 766 62 62 | Fax +41 (0)41 766 62 63 | E-Mail info@kubler.ch | Internet www.kubler.ch

Code 4

	Key 1 ... / ... / ... / ... - **Float fastener**		Key 2 ... / ... / ... / ... - **Level switch function**		Key 3 ... / ... / ... / ... - **Level switch option**
V[1]	Stainless steel	U[1]	Change over (SPDT)*	R22[1]	Switch protective circuit with 22 ohm / 0.21 W resistor
VP[1]	Stainless steel electropolished / Ra ca. 0,8µm (not attestable)	S[1]	Normally open (NO)*	N[1]	Switch protective circuit according to NAMUR EN 60947
TI[1]	Titanium	O[1]	Normally closed (NC)*	HT	High temperature version 180-250°C
HC[1]	Alloy C		* 2 contacts possible e.g. ' OS '		
VEEC[1]	Stainless steel ECTFE coated				
VPFA[1]	Stainless steel PFA coated				
P	PVC				
PP	Polypropylene				
PF	PVDF				
PA	Polyamide				

Code 4

	Key 4 ... / ... / ... / ... - **Temperature switch function**
TS[1]	Temperature switch normally open (NO)*
TO[1]	Temperature switch normally closed (NC)*
TPS[1]	Temperature switch normally open (NO)*
TPO[1]	Temperature switch normally closed (NC)*
	* Multiple selections possible e.g. ' TSTO '

Code 5

	Key 1 ... / ... / ... / ... - **Number of probes**		Key 2 ... / ... / ... / ... - **Temperature probe**		Key 3 ... / ... / ... / ... - **Temperature control unit**
...	Number of temperature probes	TFA2[1]	Pt 100 Probe / 2-wire	TPAT[1]	TP5333A
		TFA3[1]	Pt 100 Probe / 3-wire	TPBT[1]	TP5333D Ex
		TFA4[1]	Pt 100 Probe / 4-wire	TDAT[1]	TD5335A
		TFB2[1]	Pt 1000 Probe / 2-wire	TDBT[1]	TD5335D Ex
		TFB3[1]	Pt 1000 Probe / 3-wire	PAATP[1]	TP5350AP / PROFIBUS® PA
		TFB4[1]	Pt 1000 Probe / 4-wire	PABTP[1]	TP5350BP Ex / PROFIBUS® PA
		TF[1]	Temperature probe (acc. to customers device)	PAATF[1]	TP5350AF / FOUNDATION™ Fieldbus
				PABTF[1]	TP5350BF Ex / FOUNDATION™ Fieldbus

Code 5

	Key 4 ... / ... / ... / ... - **Temperature measuring range**
050[1]	0°C ... 50°C / 4 ... 20 mA
100[1]	0°C ... 100°C / 4 ... 20 mA
150	0°C ... 150°C / 4 ... 20 mA
200	0°C ... 200°C / 4 ... 20 mA
000	..°C ... ..°C / 4 ... 20 mA

Example

5									6		7		8		9								10				**Code**
1	/	2	/	3	/	4	-	1	-	1	-	1	-	1	/	2	/	3	-	1	/	2	/	3			**Key**
1	/	TFA2	/	TPAT	/	050	-	L115	-	SVK44	-									EXIAG	/	PEDII					**Example**

Black = not possible according to Atex / Blue = possible according to Atex Exia / Blue[1] = possible according to Atex Exia and Exd / Black[1] = possible according to Atex Exd

Code 6

	Key 1 ... - **Length of instrument**
L...[1]	Length of instrument in mm

Code 7

	Key 1 ... - **Float**
...	Acc. to float table on page 135

Code 8

	Key 1 ... - **Optional test function**
NTO	With test function to high level
NTU	With test function for low level

Code 9

	Key 1 ... - **Length of cable**		Key 2 ... / ... / ... - **Connection cable**		Key 3 ... / ... / ... - **Connection cable option**
...	Length of cable in meter	PVC[1]	PVC connection cable	KA[1]	Shielded
		PVCB[1]	PVC connection cable with blue coating	KB[1]	Shielded / Oil-resistant
		SIL[1]	Silicone connection cable	KC[1]	Shielded / Oil-resistant / Halogen-free
		PUR[1]	PUR connection cable	KD[1]	Oil-resistant
		RAD[1]	Radox connection cable	KE[1]	Oil-resistant / Halogen-free
		FTEF[1]	Teflon strands	KF[1]	Halogen-free
		FPVC[1]	PVC strands		
		FPOL	Polyethylene strands (only Magnetic Float Switches Horizontal - Mini)		

Code 10

	Key 1 ... / ... / ... - **Approvals / 1**		Key 2 ... / ... / ... - **Approvals / 2**		Key 3 ... / ... / ... - **Approvals / 3**
EXIAG	Acc. to Exia, atmosphere gas	PEDII[1]	Acc. to PED97/23/EC category II	BV[1]	Approval Bureau Veritas
EXIAGD	Acc. to Exia, atmosphere gas and dust	PEDIV[1]	Acc. to PED97/23/EC category IV	GL[1]	Approval Germanischer Lloyd
EXDG[1]	Acc. to Exd, atmosphere gas			EAC1[1]	Approval EAC TR CU 004/2011 & 012/2011 & 020/2011
EXDGD[1]	Acc. to Exd, atmosphere gas and dust				
EXIADG[1]	Acc. to Exia and Exd, atmosphere gas				
EXIADGD[1]	Acc. to Exia and Exd, atmosphere gas and dust				

Example

Code	1		2						3						4						
Key	1	-	1	/	2	/	3	-	1.1	/	1.2	/	1.3	-	1	/	2	/	3	/	4	-
Example	HS	-	ALE	/	V	/	FE	-	50	/	16	/	B1	-	V	/	U	/	R	/	TO	-

Black = not possible according to Atex / Blue = possible according to Atex Exia / Blue[1] = possible according to Atex Exia and Exd / Black[1] = possible according to Atex Exd

Heinrich Kübler AG
Ruessenstrasse 4 | CH-6340 Baar | Phone +41 (0)41 766 62 62 | Fax +41 (0)41 766 62 63 | E-Mail info@kubler.ch | Internet www.kubler.ch

Notes

Example

5								6		7		8		9						10					**Code**
1	/	2	/	3	/	4	-	1	-	1	-	1	-	1	/	2	/	3	-	1	/	2	/	3	**Key**
1	/	TFA2	/	TPAT	/	050	-	L115	-	SVK44	-									EXIAG	/	PEDII			**Example**

Black = not possible according to Atex / Blue = possible according to Atex Exia / Blue[1] = possible according to Atex Exia and Exd / Black[1] = possible according to Atex Exd

Electrical connection

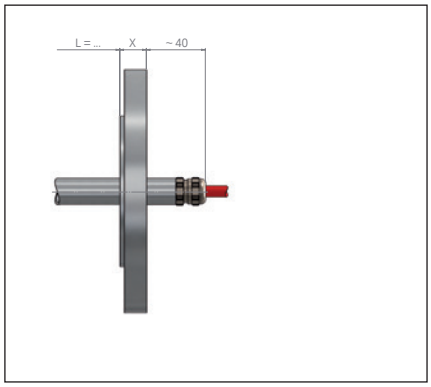

Connection type: K
Material quality: According as cable type
Cable entry: PG or metric
Ingress protection class: IP 55 (optional IP 68)
Ambient temperature: -40°C ... 200°C

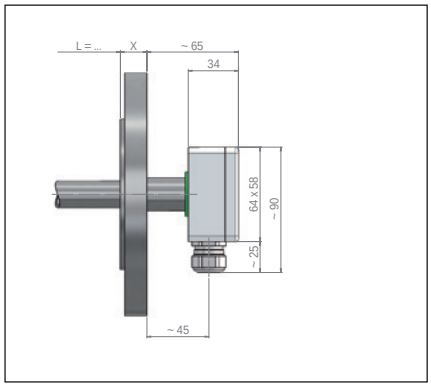

Connection type: ALE
Material quality: Aluminium coated RAL 7001
Cable entry: M20 x 1.5
Ingress protection class: IP 65
Ambient temperature: -40°C ... 100°C

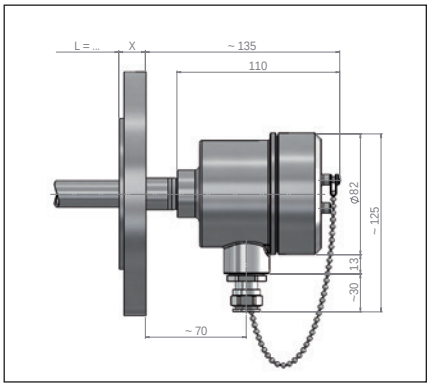

Connection type: AVA / AVDA (Exd)
Material quality: Stainless steel A4 (SS316)
Cable entry: M20 x 1.5
Ingress protection class: IP 67 / (Exd / IP68)
Ambient temperature: -40°C ... 85°C

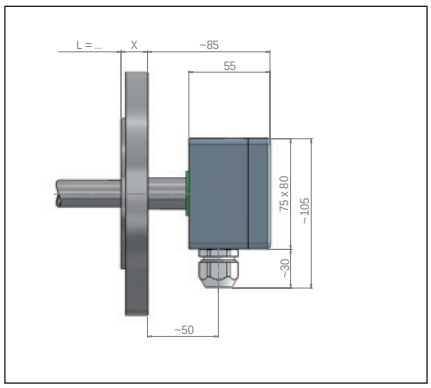

Connection type: APA / APB (Ex)
Material quality: Polyester
Cable entry: M20 x 1.5
Ingress protection class: IP 65
Ambient temperature: -10°C ... 100°C

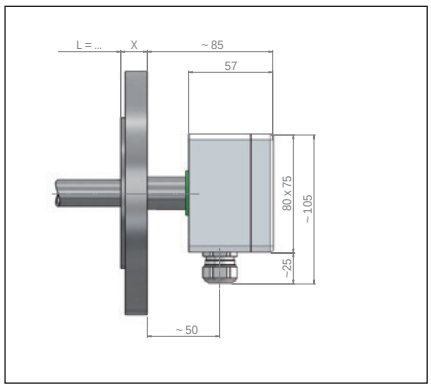

Connection type: ALF
Material quality: Aluminium coated RAL 7001
Cable entry: M20 x 1.5
Ingress protection class: IP 65
Ambient temperature: -40°C ... 100°C

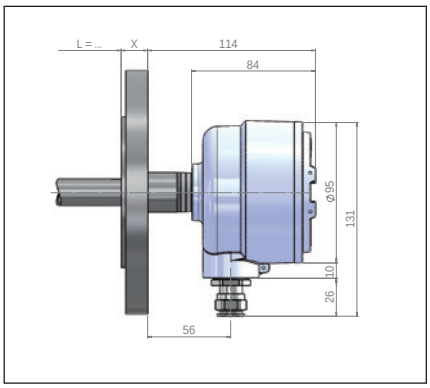

Connection type: ALDA (Exd)
Material quality: Aluminium coated RAL 9006
Cable entry: M20 x 1.5
Ingress protection class: IP 68
Ambient temperature: -40°C ... 100°C

Approvals / Certificates

ATEX*

II 1/2G Ex c ia IIC T6 - T3 Ga/Gb	II 2G Ex c d IIC T6 - T4 Gb		
II 2D Ex c tb IIIC T80°C - T190°C Db IP6X	II 2D Ex c tb IIIC T80°C - T190°C Db IP6X		
Liquid temperature Exia max. 180°C / Exd max. 120°C			
Type of protection intrinsic safety Ex ia IIC switch or temperature switch	I_i ≤ 100 mA		
Type of protection intrinsic safety Ex ia IIC temperature probe	U_i ≤ 28 V	I_i ≤ 100 mA	P_i ≤ 700 mW
Type of protection intrinsic safety Ex ia IIC with option /N (NAMUR EN 60947)	U_i ≤ 15 VDC	I_i ≤ 60 mA	
Type of protection „flameproof enclosure“	U_N ≤ 250 VDC/AC	P_{SN} ≤ 50 W/VA	P_{FN} ≤ 700 mW
Type of protection „flameproof enclosure“ with option /N (NAMUR EN 60947)	U_N ≤ 15 VDC	I_N ≤ 60 mA	
Type of protection „flameproof enclosure“ with option /R22 (resistor)	U_N ≤ 250 VDC/AC	I_N ≤ 100 mA	P_V ≤ 0.21 W

Further electrical connections page 136
Further process connection according to type key page 118
Further floats page 135

The magnetic float switches Horizontal are based on a modular design and can be arranged individually.
Type key page 118 - 120

* = The approval is dependent on the equipment combination

Heinrich Kübler AG
Ruessenstrasse 4 | CH-6340 Baar | Phone +41 (0)41 766 62 62 | Fax +41 (0)41 766 62 63 | E-Mail info@kubler.ch | Internet www.kubler.ch

Type	HS-ALE/V/FE-50/16/B1-V/..-L...-HSVK44	HS-ALE/V/R-1½-V/..-L...-HSVK44
Material quality:	1.4404 / 1.4435 / 1.4571 (316L / 316Ti)	1.4404 / 1.4435 / 1.4571 (316L / 316Ti)
Electrical connection:	ALE Aluminium terminal box	ALE Aluminium terminal box
Process connection:	Flange EN DN 50 / PN 16 / Form B1	G 1½“
Guide tube:	-	-
Length of instrument:	≤ 500 mm	≤ 500 mm
Float:	HSVK44 Ø 44 mm	HSVK44 Ø 44 mm
Specific gravity:	≥ 700 kg/m³ (optional ≥ 350 kg/m³)	≥ 700 kg/m³ (optional ≥ 350 kg/m³)
Design pressure:	-1 bar ... 16 bar (depending on temperature)	-1 bar ... 16 bar
Design temperature:	-30°C ... 180°C (optional 250°C)	-30°C ... 180°C (optional 250°C)
Ingress protection class:	IP 65	IP 65
Mounting position:	Horizontal +/-3°	Horizontal +/-3°
Level switch function		
Function:	Normally open (NO) / S	Normally open (NO) / S
Switching capacity:	230 V / 1.0 A / 100 VA	230 V / 1.0 A / 100 VA
Maximal number of contacts:	2 pieces	2 pieces
Function:	Normally closed (NC) / O	Normally closed (NC) / O
Switching capacity:	230 V / 0.5 A / 40 VA	230 V / 0.5 A / 40 VA
Maximal number of contacts:	2 pieces	2 pieces
Function:	Change over (SPDT) / U	Change over (SPDT) / U
Switching capacity:	230 V / 0.5 A / 40 VA	230 V / 0.5 A / 40 VA
Maximal number of contacts:	2 pieces	2 pieces
Option temperature probe / Page 137		
Temperature probe:	Pt-100 / Pt-1000	Pt-100 / Pt-1000
Norm:	IEC 751 Kl.B	IEC 751 Kl.B
Option temperature switch / Page 137		
Function:	Normally closed (NC) or normally open (NO)	Normally closed (NC) or normally open (NO)
Switching capacity:	Page 137	Page 137
Accuracy / Hysteresis:	Page 137	Page 137
Temperature / Grading:	Page 137	Page 137

Minimum measures

HS-ALE/V/FE-50/16/B1-V/..-L…-HSVK44
Minimum length: 80 mm
Standard length: 110 mm

Approvals / Certificates

ATEX / BV / EAC / GL / PED / SIL1

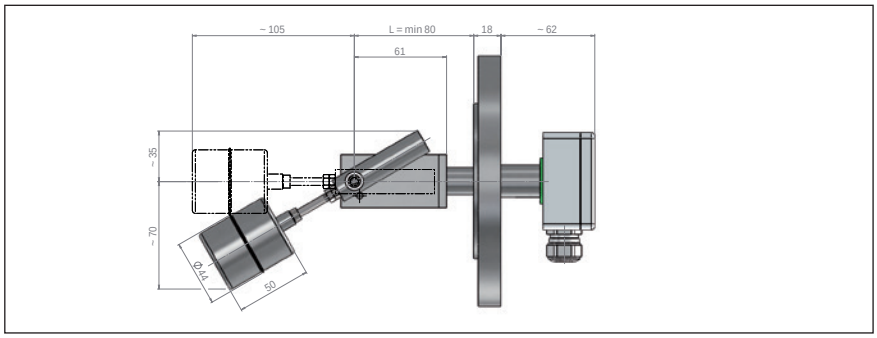

Minimum measures

HS-ALE/V/R-1½-V/..-L…-HSVK44
Minimum length: 95 mm
Standard length: 110 mm

Approvals / Certificates

ATEX / BV / EAC / GL / PED / SIL1

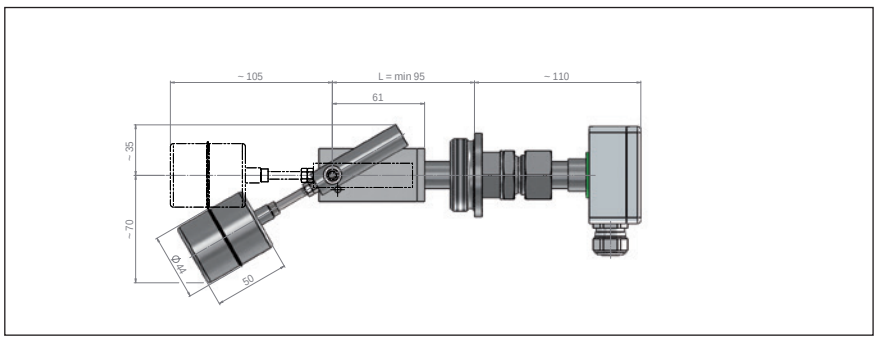

The magnetic float switches Horizontal are based on a modular design and can be arranged individually.
Type key page 118 - 120

Magnetic Float Switches Horizontal / Stainless steel

Type	HS-ALE/V/FQ-80-V/..-L...-HSVK44	HS-ALE/V/FQ-92-V/..-L...-HSVK44
Material quality:	1.4404 / 1.4435 / 1.4571 (316L / 316Ti)	1.4404 / 1.4435 / 1.4571 (316L / 316Ti)
Electrical connection:	ALE Aluminium terminal box	ALE Aluminium terminal box
Process connection:	Flange 80x80x12 mm	Flange 92x92x15 mm
Guide tube:	-	-
Length of instrument:	≤ 500 mm	≤ 500 mm
Float:	HSVK44 Ø 44 mm	HSVK44 Ø 44 mm
Specific gravity:	≥ 700 kg/m³ (optional ≥ 350 kg/m³)	≥ 700 kg/m³ (optional ≥ 350 kg/m³)
Design pressure:	-1 bar ... 16 bar (depending on temperature)	-1 bar ... 16 bar (depending on temperature)
Design temperature:	-30°C ... 180°C (optional 250°C)	-30°C ... 180°C (optional 250°C)
Ingress protection class:	IP 65	IP 65
Mounting position:	Horizontal +/-3°	Horizontal +/-3°
Level switch function		
Function:	Normally open (NO) / S	Normally open (NO) / S
Switching capacity:	230 V / 1.0 A / 100 VA	230 V / 1.0 A / 100 VA
Maximal number of contacts:	2 pieces	2 pieces
Function:	Normally closed (NC) / O	Normally closed (NC) / O
Switching capacity:	230 V / 0.5 A / 40 VA	230 V / 0.5 A / 40 VA
Maximal number of contacts:	2 pieces	2 pieces
Function:	Change over (SPDT) / U	Change over (SPDT) / U
Switching capacity:	230 V / 0.5 A / 40 VA	230 V / 0.5 A / 40 VA
Maximal number of contacts:	2 pieces	2 pieces
Option temperature probe / Page 137		
Temperature probe:	Pt-100 / Pt-1000	Pt-100 / Pt-1000
Norm:	IEC 751 Kl.B	IEC 751 Kl.B
Option temperature switch / Page 137		
Function:	Normally closed (NC) or normally open (NO)	Normally closed (NC) or normally open (NO)
Switching capacity:	Page 137	Page 137
Accuracy / Hysteresis:	Page 137	Page 137
Temperature / Grading:	Page 137	Page 137

Minimum measures

HS-ALE/V/FQ-80-V/..-L…-HSVK44
Minimum length: 85 mm
Standard length: 110 mm

Approvals / Certificates

ATEX / PED / EAC / GL / BV / SIL1

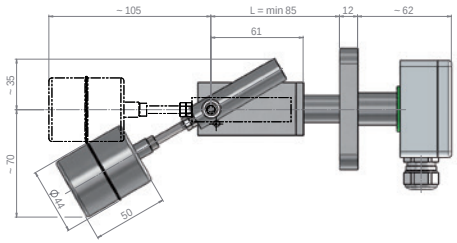

Screw-hole circle Ø 83 mm, 4 Bores Ø 9,0 mm

Minimum measures

HS-ALE/V/FQ-92-V/..-L…-HSVK44
Minimum length: 80 mm
Standard length: 110 mm

Approvals / Certificates

ATEX / PED / EAC / GL / BV / SIL1

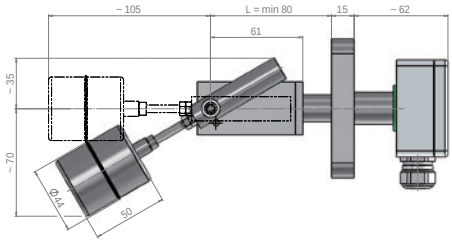

Screw-hole circle Ø 92 mm, 4 Bores Ø 14,0 mm

The magnetic float switches Horizontal are based on a modular design and can be arranged individually.
Type key page 118 - 120

Heinrich Kübler AG
Ruessenstrasse 4 | CH-6340 Baar | Phone +41 (0)41 766 62 62 | Fax +41 (0)41 766 62 63 | E-Mail info@kubler.ch | Internet www.kubler.ch

Type	HS-ALE/V/FE-50/16/B1-V/..-L...-HZ-VS42/100-NTO	HS-ALE/V/FE-50/16/B1-V/..-L...-HZ-VS42/100-NTU
Material quality:	1.4404 / 1.4435 / 1.4571 (316L / 316Ti)	1.4404 / 1.4435 / 1.4571 (316L / 316Ti)
Electrical connection:	ALE Aluminium terminal box	ALE Aluminium terminal box
Process connection:	Flange EN DN 50 / PN 16 / Form B1	Flange EN DN 50 / PN 16 / Form B1
Guide tube:	-	-
Length of instrument:	≤ 500 mm	≤ 500 mm
Float:	HZVS42/100 Ø 42 mm	HZVS42/100 Ø 42 mm
Specific gravity:	≥ 700 kg/m³ (optional ≥ 350 kg/m³)	≥ 700 kg/m³ (optional ≥ 350 kg/m³)
Design pressure:	-1 bar ... 16 bar (depending on temperature)	-1 bar ... 16 bar (depending on temperature)
Design temperature:	-30°C ... 150°C	-30°C ... 150°C
Ingress protection class:	IP 65	IP 65
Mounting position:	Horizontal +/-3°	Horizontal +/-3°
Level switch function		
Function:	Normally open (NO) / S	Normally open (NO) / S
Switching capacity:	230 V / 1.0 A / 100 VA	230 V / 1.0 A / 100 VA
Maximal number of contacts:	2 pieces	2 pieces
Function:	Normally closed (NC) / O	Normally closed (NC) / O
Switching capacity:	230 V / 0.5 A / 40 VA	230 V / 0.5 A / 40 VA
Maximal number of contacts:	2 pieces	2 pieces
Function:	Change over (SPDT) / U	Change over (SPDT) / U
Switching capacity:	230 V / 0.5 A / 40 VA	230 V / 0.5 A / 40 VA
Maximal number of contacts:	2 pieces	2 pieces
Option temperature probe / Page 137		
Temperature probe:	Pt-100 / Pt-1000	Pt-100 / Pt-1000
Norm:	IEC 751 Kl.B	IEC 751 Kl.B
Option temperature switch / Page 137		
Function:	Normally closed (NC) or normally open (NO)	Normally closed (NC) or normally open (NO)
Switching capacity:	Page 137	Page 137
Accuracy / Hysteresis:	Page 137	Page 137
Temperature / Grading:	Page 137	Page 137

Minimum measures

HS-ALE/V/FE-50/16/B1-V/..-L…-HZVS42/100-NTO
Minimum length: 150 mm
Standard length: 220 mm

Approvals / Certificates

ATEX / PED / EAC / GL / BV / SIL1

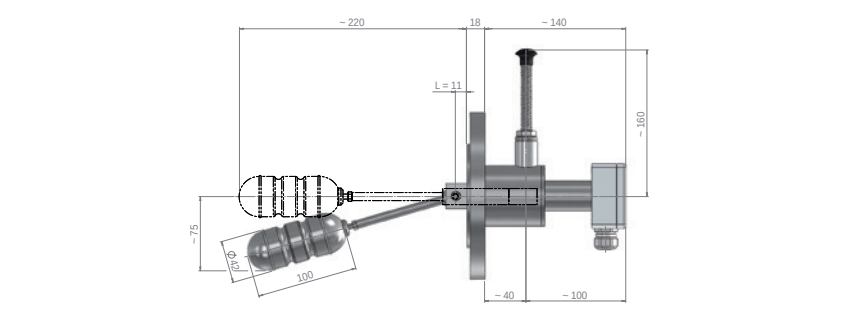

Minimum measures

HS-ALE/V/FE-50/16/B1-V/..-L…-HZVS42/100-NTU
Minimum length: 150 mm
Standard length: 220 mm

Approvals / Certificates

ATEX / PED / EAC / GL / BV / SIL1

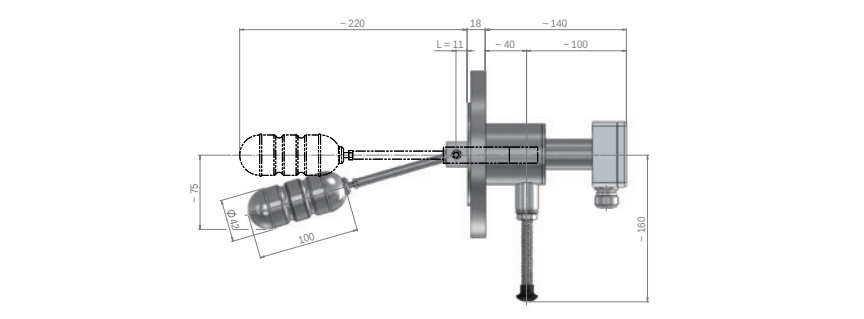

The magnetic float switches Horizontal are based on a modular design and can be arranged individually.
Type key page 118 - 120

Magnetic Float Switches Horizontal / Titanium / Alloy C

Type	HS-ALE/TI/FE-65/16/B1-TI/..-L...-HSTI52	HS-ALE/HC/FE-65/16/B1-HC/..-L...-HSHC52
Material quality:	Titanium	Alloy C
Electrical connection:	ALE Aluminium terminal box	ALE Aluminium terminal box
Process connection:	Flange EN DN 65 / PN 16 / Form B1	Flange EN DN 65 / PN 16 / Form B1
Guide tube:	-	-
Length of instrument:	≤ 500 mm	≤ 500 mm
Float:	HSTI52 Ø 52 mm	HSHC52 Ø 52 mm
Specific gravity:	≥ 700 kg/m³ (optional ≥ 350 kg/m³)	≥ 700 kg/m³ (optional ≥ 350 kg/m³)
Design pressure:	-1 bar ... 16 bar (depending on temperature)	-1 bar ... 16 bar (depending on temperature)
Design temperature:	-10°C ... 150°C	-30°C ... 180°C (optional 250°C)
Ingress protection class:	IP 65	IP 65
Mounting position:	Horizontal +/-3°	Horizontal +/-3°
Level switch function		
Function:	Normally open (NO) / S	Normally open (NO) / S
Switching capacity:	230 V / 1.0 A / 100 VA	230 V / 1.0 A / 100 VA
Maximal number of contacts:	2 pieces	2 pieces
Function:	Normally closed (NC) / O	Normally closed (NC) / O
Switching capacity:	230 V / 0.5 A / 40 VA	230 V / 0.5 A / 40 VA
Maximal number of contacts:	2 pieces	2 pieces
Function:	Change over (SPDT) / U	Change over (SPDT) / U
Switching capacity:	230 V / 0.5 A / 40 VA	230 V / 0.5 A / 40 VA
Maximal number of contacts:	2 pieces	2 pieces
Option temperature probe / Page 137		
Temperature probe:	Pt-100 / Pt-1000	Pt-100 / Pt-1000
Norm:	IEC 751 Kl.B	IEC 751 Kl.B
Option temperature switch / Page 137		
Function:	Normally closed (NC) or normally open (NO)	Normally closed (NC) or normally open (NO)
Switching capacity:	Page 137	Page 137
Accuracy / Hysteresis:	Page 137	Page 137
Temperature / Grading:	Page 137	Page 137

Minimum measures

HS-ALE/TI/FE-65/16/B1-TI/..-L…-HSTI52
Minimum length: 95 mm
Standard length: 110 mm

Approvals / Certificates

ATEX / EAC / PED / SIL1

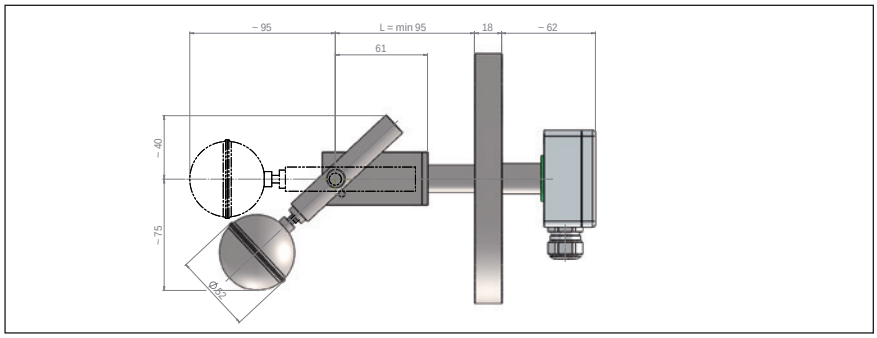

Minimum measures

HS-ALE/HC/FE-65/16/B1-HC/..-L…-HSHC52
Minimum length: 95 mm
Standard length: 110 mm

Approvals / Certificates

ATEX / EAC / PED / SIL1

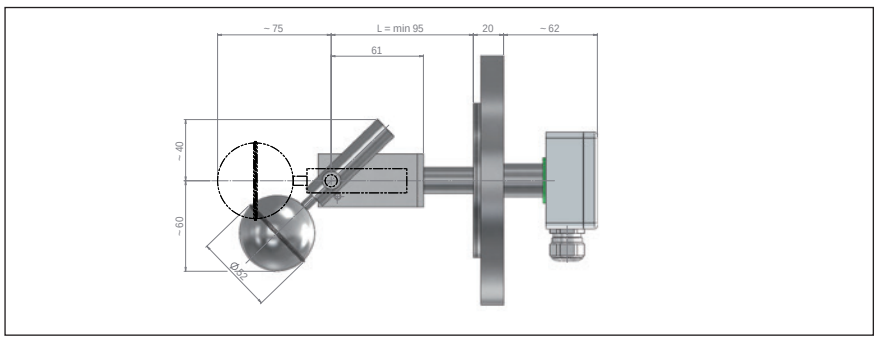

The magnetic float switches Horizontal are based on a modular design and can be arranged individually.
Type key page 118 - 120

Heinrich Kübler AG
Ruessenstrasse 4 | CH-6340 Baar | Phone +41 (0)41 766 62 62 | Fax +41 (0)41 766 62 63 | E-Mail info@kubler.ch | Internet www.kubler.ch

Type	HS-AVA/VEEC/FE-50/16/B1-VEEC/..-L...-HSVEECK45	HS-AVA/VPFA/FE-50/16/B1-VPFA/..-L...-HSVPFAK45
Material quality:	Stainless steel ECTFE coated	Stainless steel PFA coated
Electrical connection:	AVA Stainless steel terminal box	AVA Stainless steel terminal box
Process connection:	Flange EN DN 50 / PN 16 / Form B1	Flange EN DN 50 / PN 16 / Form B1
Guide tube:	-	-
Length of instrument:	≤ 500 mm	≤ 500 mm
Float:	HSVEECK45 Ø 45 mm	HSVPFAK45 Ø 45 mm
Specific gravity:	≥ 700 kg/m³ (optional ≥ 350 kg/m³)	≥ 700 kg/m³ (optional ≥ 350 kg/m³)
Design pressure:	-1 bar ... 16 bar (depending on temperature)	-1 bar ... 16 bar (depending on temperature)
Design temperature:	-30°C ... 150°C	-30°C ... 180°C (optional 250°C)
Ingress protection class:	IP 67	IP 67
Mounting position:	Horizontal +/-3°	Horizontal +/-3°
Level switch function		
Function:	Normally open (NO) / S	Normally open (NO) / S
Switching capacity:	230 V / 1.0 A / 100 VA	230 V / 1.0 A / 100 VA
Maximal number of contacts:	2 pieces	2 pieces
Function:	Normally closed (NC) / O	Normally closed (NC) / O
Switching capacity:	230 V / 0.5 A / 40 VA	230 V / 0.5 A / 40 VA
Maximal number of contacts:	2 pieces	2 pieces
Function:	Change over (SPDT) / U	Change over (SPDT) / U
Switching capacity:	230 V / 0.5 A / 40 VA	230 V / 0.5 A / 40 VA
Maximal number of contacts:	2 pieces	2 pieces
Option temperature probe / Page 137		
Temperature probe:	Pt-100 / Pt-1000	Pt-100 / Pt-1000
Norm:	IEC 751 Kl.B	IEC 751 Kl.B
Option temperature switch / Page 137		
Function:	Normally closed (NC) or normally open (NO)	Normally closed (NC) or normally open (NO)
Switching capacity:	Page 137	Page 137
Accuracy / Hysteresis:	Page 137	Page 137
Temperature / Grading:	Page 137	Page 137

Minimum measures

HS-AVA/VEEC/FE-50/16/B1-VEEC/..-L...-HSVEECK45
Minimum length: 80 mm
Standard length: 110 mm

Approvals / Certificates

ATEX / EAC / PED / SIL1

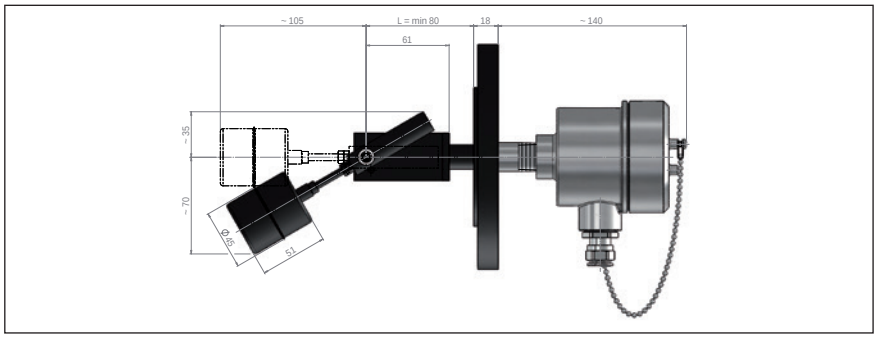

Minimum measures

HS-AVA/VPFA/FE-50/16/B1-VPFA/..-L...-HSVPFAK45
Minimum length: 80 mm
Standard length: 110 mm

Approvals / Certificates

ATEX / EAC / PED / SIL1

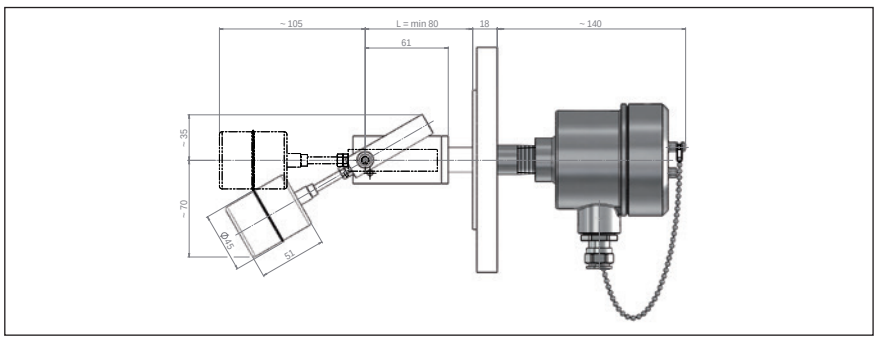

The magnetic float switches Horizontal are based on a modular design and can be arranged individually.
Type key page 118 - 120

Electrical connection

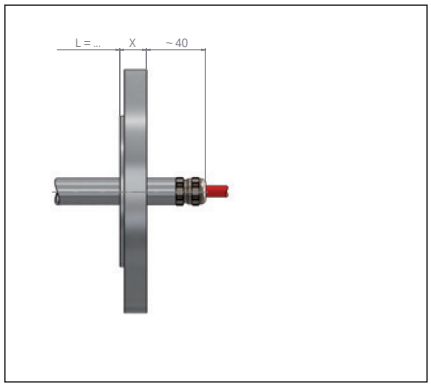

Connection type: K
Material quality: According as cable type
Cable entry: PG or metric
Ingress protection class: IP 55 (optional IP 68)
Ambient temperature: -40°C ... 200°C

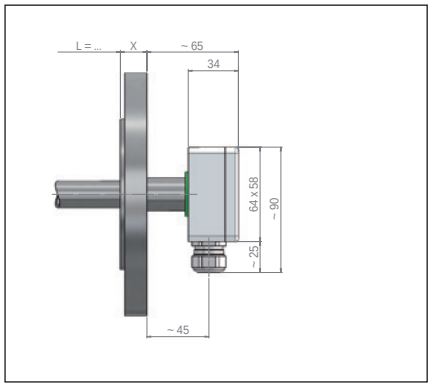

Connection type: ALE
Material quality: Aluminium coated RAL 7001
Cable entry: M20 x 1.5
Ingress protection class: IP 65
Ambient temperature: -40°C ... 100°C

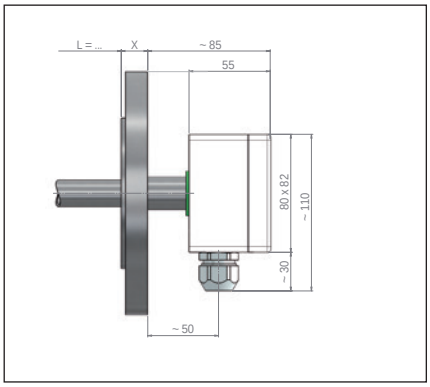

Connection type: ABA
Material quality: ABS
Cable entry: M20 x 1.5
Ingress protection class: IP 65
Ambient temperature: -10°C ... 80°C

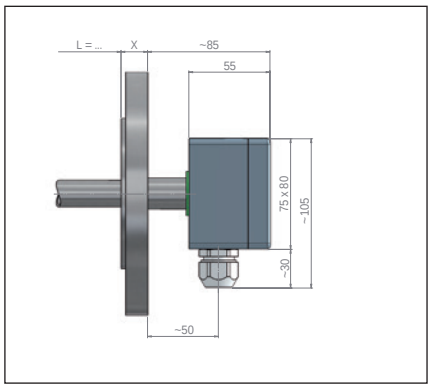

Connection type: APA / APB (Ex)
Material quality: Polyester
Cable entry: M20 x 1.5
Ingress protection class: IP 65
Ambient temperature: -10°C ... 100°C

Approvals / Certificates

Further electrical connections page 136
Further process connection according to type key page 118
Further floats page 135

The magnetic float switches Horizontal are based on a modular design and can be arranged individually.
Type key page 118 - 120

Heinrich Kübler AG
Ruessenstrasse 4 | CH-6340 Baar | Phone +41 (0)41 766 62 62 | Fax +41 (0)41 766 62 63 | E-Mail info@kubler.ch | Internet www.kubler.ch

Type	HS-ABA/P/FE-50/10/A-P/..-L..-HSPK42	HS-K/P/EM-20-P/..-L..-HSPK42-../PVC
Material quality:	PVC	PVC
Electrical connection:	ABS terminal box	PVC connection cable
Process connection:	Flange EN DN 50 / PN 10 / Form A	M20x1.5
Guide tube:	-	-
Length of instrument:	≤ 110 mm	≤ 110 mm
Float:	HSPK44 Ø 44 mm	HSPK44 Ø 44 mm
Specific gravity:	≥ 700 kg/m³ (optional ≥ 350 kg/m³)	≥ 700 kg/m³ (optional ≥ 350 kg/m³)
Design pressure:	-1 bar ... 1 bar	-1 bar ... 1 bar
Design temperature:	-15°C ... 60°C	-15°C ... 60°C
Ingress protection class:	IP 65	IP 55
Mounting position:	Horizontal +/-3°	Horizontal +/-3°
Level switch function		
Function:	Normally open (NO) / S	Normally open (NO) / S
Switching capacity:	230 V / 1.0 A / 100 VA	230 V / 1.0 A / 100 VA
Maximal number of contacts:	2 pieces	2 pieces
Function:	Normally closed (NC) / O	Normally closed (NC) / O
Switching capacity:	230 V / 0.5 A / 40 VA	230 V / 0.5 A / 40 VA
Maximal number of contacts:	2 pieces	2 pieces
Function:	Change over (SPDT) / U	Change over (SPDT) / U
Switching capacity:	230 V / 0.5 A / 40 VA	230 V / 0.5 A / 40 VA
Maximal number of contacts:	2 pieces	2 pieces
Option temperature probe / Page 137		
Temperature probe:	Pt-100 / Pt-1000	Pt-100 / Pt-1000
Norm:	IEC 751 Kl.B	IEC 751 Kl.B
Option temperature switch / Page 137		
Function:	Normally closed (NC) or normally open (NO)	Normally closed (NC) or normally open (NO)
Switching capacity:	Page 137	Page 137
Accuracy / Hysteresis:	Page 137	Page 137
Temperature / Grading:	Page 137	Page 137

Minimum measures

HS-ABA/P/FE-50/10/A-P/..-L..-HSPK42
Standard length: 110 mm

Approvals / Certificates

EAC / PED / SIL1

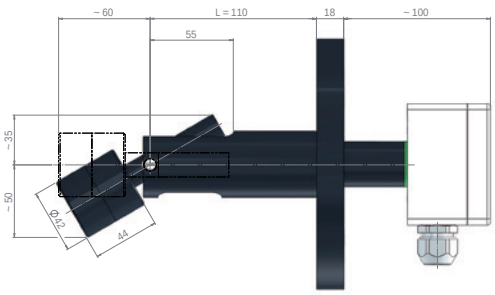

Minimum measures

HS-K/P/EM-20-P/..-L..-HSPK42-../PVC
Standard length: 110 mm

Approvals / Certificates

EAC / PED / SIL1

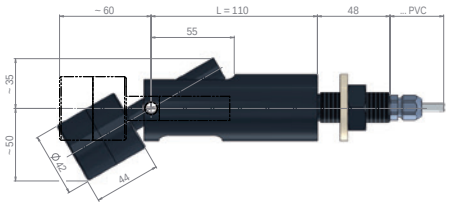

The magnetic float switches Horizontal are based on a modular design and can be arranged individually.
Type key page 118 - 120

Magnetic Float Switches Horizontal / Polypropylene

Type	HS-ABA/PP/FE-50/10/A-PP/..-L..-HSPPK44	HS-K/PP/EM-20-PP/..-L..-HSPPK44-../PVC
Material quality:	Polypropylene	Polypropylene
Electrical connection:	ABS terminal box	PVC connection cable
Process connection:	Flange EN DN 50 / PN 10 / Form A	M20x1.5
Guide tube:	-	-
Length of instrument:	≤ 110 mm	≤ 110 mm
Float:	HSPPK44 Ø 44 mm	HSPPK44 Ø 44 mm
Specific gravity:	≥ 700 kg/m³ (optional ≥ 350 kg/m³)	≥ 700 kg/m³ (optional ≥ 350 kg/m³)
Design pressure:	-1 bar ... 1 bar	-1 bar ... 1 bar
Design temperature:	-10°C ... 80°C	-10°C ... 80°C
Ingress protection class:	IP 65	IP 55
Mounting position:	Horizontal +/-3°	Horizontal +/-3°
Level switch function		
Function:	Normally open (NO) / S	Normally open (NO) / S
Switching capacity:	230 V / 1.0 A / 100 VA	230 V / 1.0 A / 100 VA
Maximal number of contacts:	2 pieces	2 pieces
Function:	Normally closed (NC) / O	Normally closed (NC) / O
Switching capacity:	230 V / 0.5 A / 40 VA	230 V / 0.5 A / 40 VA
Maximal number of contacts:	2 pieces	2 pieces
Function:	Change over (SPDT) / U	Change over (SPDT) / U
Switching capacity:	230 V / 0.5 A / 40 VA	230 V / 0.5 A / 40 VA
Maximal number of contacts:	2 pieces	2 pieces
Option temperature probe / Page 137		
Temperature probe:	Pt-100 / Pt-1000	Pt-100 / Pt-1000
Norm:	IEC 751 Kl.B	IEC 751 Kl.B
Option temperature switch / Page 137		
Function:	Normally closed (NC) or normally open (NO)	Normally closed (NC) or normally open (NO)
Switching capacity:	Page 137	Page 137
Accuracy / Hysteresis:	Page 137	Page 137
Temperature / Grading:	Page 137	Page 137

Minimum measures

HS-ABA/PP/FE-50/10/A-PP/..-L..-HSPPK44
Standard length: 110 mm

Approvals / Certificates

EAC / PED / SIL1

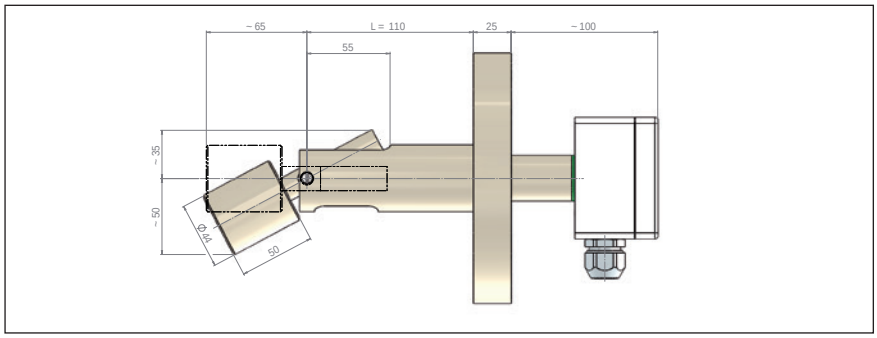

Minimum measures

HS-K/PP/EM-20-PP/..-L..-HSPPK44-../PVC
Standard length: 110 mm

Approvals / Certificates

EAC / PED / SIL1

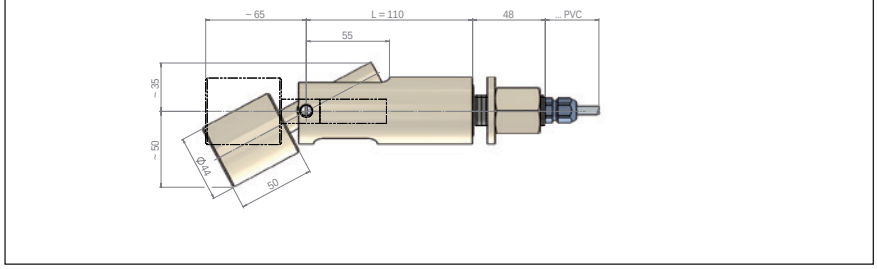

The magnetic float switches Horizontal are based on a modular design and can be arranged individually.
Type key page 118 - 120

Heinrich Kübler AG
Ruessenstrasse 4 | CH-6340 Baar | Phone +41 (0)41 766 62 62 | Fax +41 (0)41 766 62 63 | E-Mail info@kubler.ch | Internet www.kubler.ch

Type	HS-ABA/PF/FE-50/10/A-PF/..-L..-HSPFK44	HS-K/PF/EM-20-PF/..-L..-HSPFK44-../SIL
Material quality:	PVDF	PVDF
Electrical connection:	ABS terminal box	Silicon connection cable
Process connection:	Flange EN DN 50 / PN 10 / Form A	M20x1.5
Guide tube:	-	-
Length of instrument:	≤ 110 mm	≤ 110 mm
Float:	HSPFK44 Ø 44 mm	HSPFK44 Ø 44 mm
Specific gravity:	≥ 700 kg/m³ (optional ≥ 350 kg/m³)	≥ 700 kg/m³ (optional ≥ 350 kg/m³)
Design pressure:	-1 bar ... 1 bar	-1 bar ... 1 bar
Design temperature:	-10°C ... 100°C	-10°C ... 100°C
Ingress protection class:	IP 65	IP 55
Mounting position:	Horizontal +/-3°	Horizontal +/-3°
Level switch function		
Function:	Normally open (NO) / S	Normally open (NO) / S
Switching capacity:	230 V / 1.0 A / 100 VA	230 V / 1.0 A / 100 VA
Maximal number of contacts:	2 pieces	2 pieces
Function:	Normally closed (NC) / O	Normally closed (NC) / O
Switching capacity:	230 V / 0.5 A / 40 VA	230 V / 0.5 A / 40 VA
Maximal number of contacts:	2 pieces	2 pieces
Function:	Change over (SPDT) / U	Change over (SPDT) / U
Switching capacity:	230 V / 0.5 A / 40 VA	230 V / 0.5 A / 40 VA
Maximal number of contacts:	2 pieces	2 pieces
Option temperature probe / Page 137		
Temperature probe:	Pt-100 / Pt-1000	Pt-100 / Pt-1000
Norm:	IEC 751 Kl.B	IEC 751 Kl.B
Option temperature switch / Page 137		
Function:	Normally closed (NC) or normally open (NO)	Normally closed (NC) or normally open (NO)
Switching capacity:	Page 137	Page 137
Accuracy / Hysteresis:	Page 137	Page 137
Temperature / Grading:	Page 137	Page 137

Minimum measures

HS-ABA/PF/FE-50/10/A-PF/..-L..-HSPFK44
Standard length: 110 mm

Approvals / Certificates

EAC / PED / SIL1

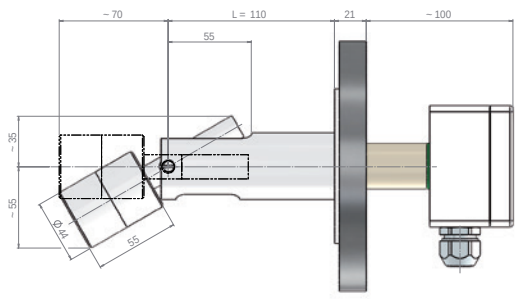

Minimum measures

HS-K/PF/EM-20-PF/..-L..-HSPFK44-../SIL
Standard length: 110 mm

Approvals / Certificates

EAC / PED / SIL1

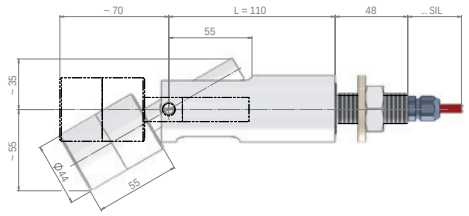

The magnetic float switches Horizontal are based on a modular design and can be arranged individually.
Type key page 118 - 120

Magnetic Float Switches Horizontal - Mini / Stainless steel

Type	HS-K/V/E-1/8-V/S-L82-HZVS17/47-0.5/FPOL	HS-K/V/RNPT-1/2-V/S-L94-HZVS17/47-0.5/FPOL
Material quality:	1.4301 (304)	1.4301 (304)
Electrical connection:	Polyethylene connection cable (Strands)	Polyethylene connection cable (Strands)
Process connection:	G 1/8“	NPT 1/2“
Guide tube:	-	-
Length of instrument:	82 mm	94 mm
Float:	HZVS17/47 Ø 17 mm	HZVS17/47 Ø 17 mm
Specific gravity:	≥ 700 kg/m³	≥ 700 kg/m³
Design pressure:	-1 bar ... 5 bar	-1 bar ... 5 bar
Design temperature:	-30°C ... 120°C	-30°C ... 120°C
Ingress protection class:	IP 55	IP 55
Mounting position:	Horizontal +/-3°	Horizontal +/-3°
Level switch function		
Function:	Normally open (NO) / S	Normally open (NO) / S
Switching capacity:	10VA / 150V / 0.5A	10VA / 150V / 0.5A
Maximal number of contacts:	1 piece	1 piece
Function:	-	-
Switching capacity:		
Maximal number of contacts:		
Function:	-	-
Switching capacity:		
Maximal number of contacts:		
Option temperature probe / Page 137		
Temperature probe:	-	-
Norm:	-	-
Option temperature switch / Page 137		
Function:	-	-
Switching capacity:	-	-
Accuracy / Hysteresis:	-	-
Temperature / Grading:	-	-

Minimum measures

HS-K/V/E-1/8-V/S-L82-HZVS17/47-0.5/FPOL

Approvals / Certificates

EAC

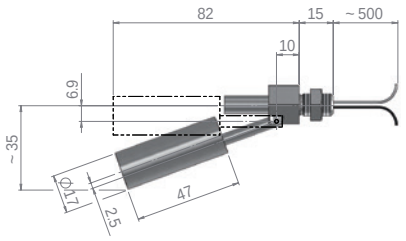

Minimum measures

HS-K/V/RNPT-1/2-V/S-L94-HZVS17/47-0.5/FPOL

Approvals / Certificates

EAC

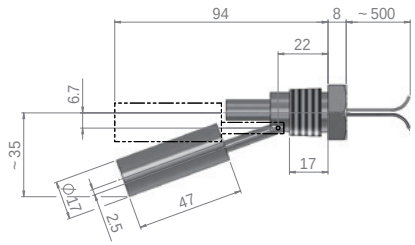

The magnetic float switches Horizontal are based on a modular design and can be arranged individually.
Type key page 118 - 120

Heinrich Kübler AG
Ruessenstrasse 4 | CH-6340 Baar | Phone +41 (0)41 766 62 62 | Fax +41 (0)41 766 62 63 | E-Mail info@kubler.ch | Internet www.kubler.ch

Type	HS-K/PA/E-1/4-PA/S-L74-HZPAK15/25-0.3/FPOL	HS-K/PA/RNPT-1/2-PA/S-L91-HZPAK15/25-0.3/FPOL
Material quality:	Polyamide	Polyamide
Electrical connection:	Polyethylene connection cable (Strands)	Polyethylene connection cable (Strands)
Process connection:	G 1/4“	NPT 1/2“
Guide tube:	-	-
Length of instrument:	73.5 mm	90.5 mm
Float:	HZPAK15/25 Ø 15 mm	HZPAK15/25 Ø 15 mm
Specific gravity:	≥ 700 kg/m³	≥ 700 kg/m³
Design pressure:	-1 bar ... 1 bar	-1 bar ... 1 bar
Design temperature:	-10°C ... 110°C	-10°C ... 110°C
Ingress protection class:	IP 55	IP 55
Mounting position:	Horizontal +/-3°	Horizontal +/-3°
Level switch function		
Function:	Normally open (NO) / S	Normally open (NO) / S
Switching capacity:	10VA / 150V / 0.5A	10VA / 150V / 0.5A
Maximal number of contacts:	1 piece	1 piece
Function:	-	-
Switching capacity:		
Maximal number of contacts:		
Function:	-	-
Switching capacity:		
Maximal number of contacts:		
Option temperature probe / Page 137		
Temperature probe:	-	-
Norm:	-	-
Option temperature switch / Page 137		
Function:	-	-
Switching capacity:	-	-
Accuracy / Hysteresis:	-	-
Temperature / Grading:	-	-

Minimum measures

HS-K/PA/E-1/4-PA/S-L74-HZPAK15/25-0.3/FPOL

Approvals / Certificates

EAC

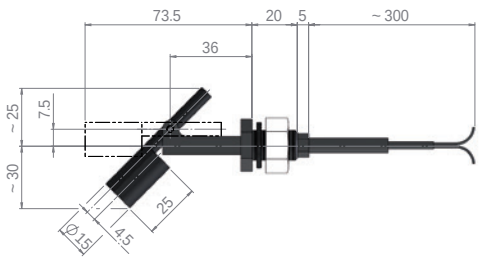

Minimum measures

HS-K/PA/RNPT-1/2-PA/S-L91-HZPAK15/25-0.3/FPOL

Approvals / Certificates

EAC

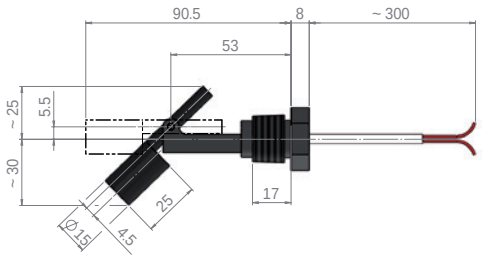

The magnetic float switches Horizontal are based on a modular design and can be arranged individually.
Type key page 118 - 120

Magnetic Float Switches Horizontal - Mini / Polypropylene

Type	HS-K/PP/E-1/4-PP/S-L74-HZPPK15/25-0.3/FPOL	HS-K/PP/RNPT-1/2-PP/S-L91-HZP-PK15/25-0.3/FPOL
Material quality:	Polypropylene	Polypropylene
Electrical connection:	Polyethylene connection cable (Strands)	Polyethylene connection cable (Strands)
Process connection:	G 1/4“	NPT 1/2“
Guide tube:	-	-
Length of instrument:	73.5 mm	90.5 mm
Float:	HZPPK15/25 Ø 15 mm	HZPPK15/25 Ø 15 mm
Specific gravity:	≥ 700 kg/m³	≥ 700 kg/m³
Design pressure:	-1 bar ... 1 bar	-1 bar ... 1 bar
Design temperature:	-10°C ... 80°C	-10°C ... 80°C
Ingress protection class:	IP 55	IP 55
Mounting position:	Horizontal +/-3°	Horizontal +/-3°
Level switch function		
Function:	Normally open (NO) / S	Normally open (NO) / S
Switching capacity:	10VA / 150V / 0.5A	10VA / 150V / 0.5A
Maximal number of contacts:	1 piece	1 piece
Function:	-	-
Switching capacity:		
Maximal number of contacts:		
Function:	-	-
Switching capacity:		
Maximal number of contacts:		
Option temperature probe / Page 137		
Temperature probe:	-	-
Norm:	-	-
Option temperature switch / Page 137		
Function:	-	-
Switching capacity:	-	-
Accuracy / Hysteresis:	-	-
Temperature / Grading:	-	-

Minimum measures

HS-K/PP/E-1/4-PP/S-L74-HZPPK15/25-0.3/FPOL

Approvals / Certificates

EAC

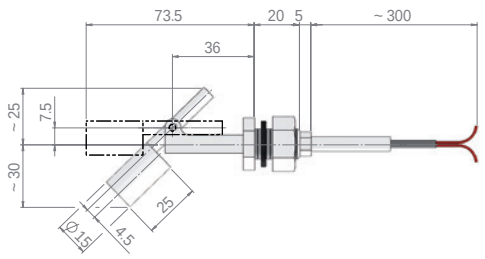

Minimum measures

HS-K/PP/RNPT-1/2-PP/S-L91-HZPPK15/25-0.3/FPOL

Approvals / Certificates

EAC

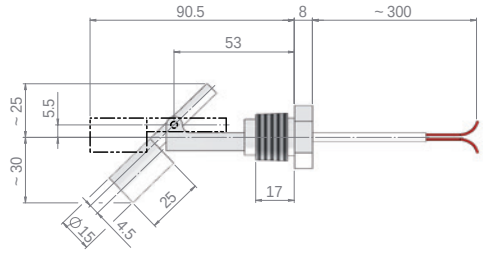

The magnetic float switches Horizontal are based on a modular design and can be arranged individually.
Type key page 118 - 120

Heinrich Kübler AG
Ruessenstrasse 4 | CH-6340 Baar | Phone +41 (0)41 766 62 62 | Fax +41 (0)41 766 62 63 | E-Mail info@kubler.ch | Internet www.kubler.ch

Drawing 1

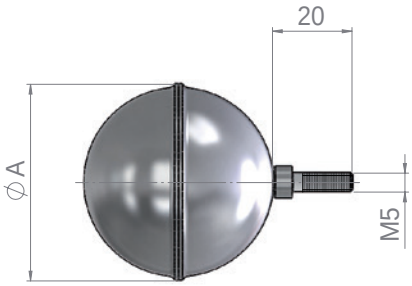

Drawing 2

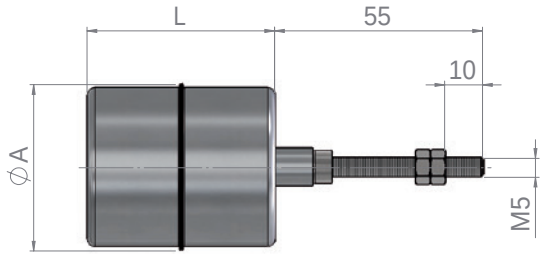

Drawing 3

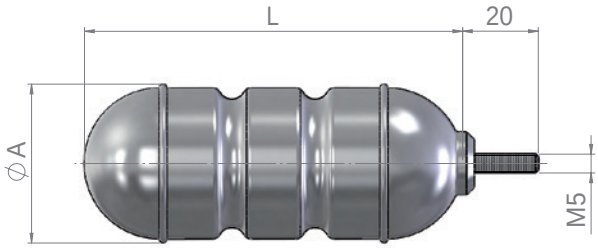

Type	Material quality	ø A	L	Min. Specific gravity	Min. / Max. Design pressure	Min. / Max. Design temperature	Drawing
		mm	mm	kg/m³	bar	°C	
HZVS42/100	Stainless steel	42	100	≥ 700 kg/m³ (optional ≥ 350 kg/m³)	-1 ... 16	-156 ... 250	3
HSVK44	Stainless steel	44	50	≥ 700 kg/m³ (optional ≥ 350 kg/m³)	-1 ... 25*	-156 ... 250	2
HSVS52	Stainless steel	52	-	≥ 700 kg/m³ (optional ≥ 350 kg/m³)	-1 ... 100*	-156 ... 250	1
HSTIS52	Titanium	52	-	≥ 700 kg/m³ (optional ≥ 350 kg/m³)	-1 ... 140	-10 ... 100	1
HSHC52	Alloy C	52	-	≥ 700 kg/m³ (optional ≥ 350 kg/m³)	-1 ... 55*	-196 ... 250	1
HSPK42	PVC	42	44	≥ 700 kg/m³ (optional ≥ 350 kg/m³)	-1 ... 1	-15 ... 60	2
HSPPK44	PP	44	43	≥ 700 kg/m³ (optional ≥ 350 kg/m³)	-1 ... 1	-10 ... 80	2
HSPFK44	PVDF	44	55	≥ 700 kg/m³ (optional ≥ 350 kg/m³)	-1 ... 1	-10 ... 100	2
HSVEECKA45	ECTFE coated	45	51	≥ 700 kg/m³ (optional ≥ 350 kg/m³)	-1 ... 25	-78 ... 150	2
HSVEECKB45**	ECTFE coated	45	51	≥ 700 kg/m³ (optional ≥ 350 kg/m³)	-1 ... 25	-78 ... 150	2
HSVPFAKA45	PFA coated	45	51	≥ 700 kg/m³ (optional ≥ 350 kg/m³)	-1 ... 25*	-100 ... 250	2
HSVPFAKB45**	PFA coated	45	51	≥ 700 kg/m³ (optional ≥ 350 kg/m³)	-1 ... 25*	-100 ... 250	2

The magnetic float switches Horizontal are based on a modular design and can be arranged individually.
Type key page 118 - 120

* = Design temperature 200°C, higher temperatures after calculating / ** = acc. to Atex (conductive)

Electrical connection

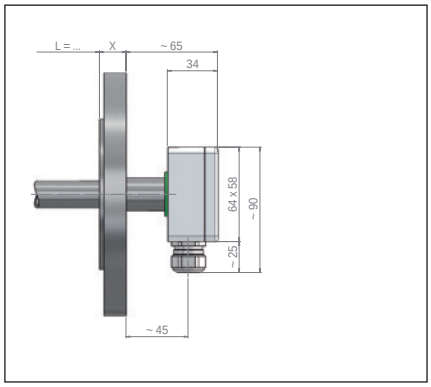

Connection type: ALE
Material quality: Aluminium coated RAL 7001
Cable entry: M20 x 1.5
Ingress protection class: IP 65
Ambient temperature: -40°C ... 100°C
Maximal number of contact clamps: 8

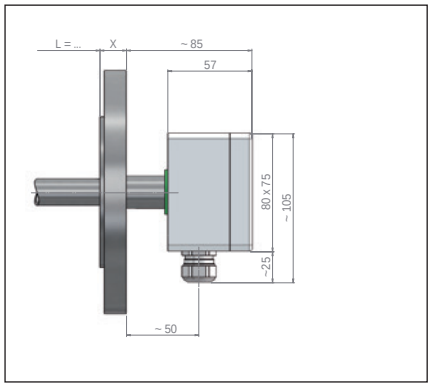

Connection type: ALF
Material quality: Aluminium coated RAL 7001
Cable entry: M20 x 1.5
Ingress protection class: IP 65
Ambient temperature: -40°C ... 100°C
Maximal number of contact clamps: 12

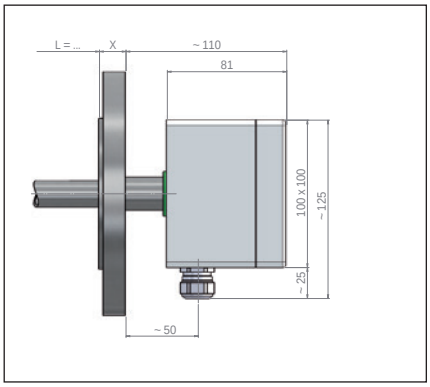

Connection type: ALG
Material quality: Aluminium coated RAL 7001
Cable entry: M20 x 1.5
Ingress protection class: IP 65
Ambient temperature: -40°C ... 100°C
Maximal number of contact clamps: 24

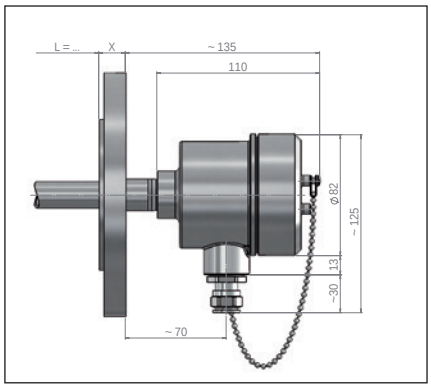

Connection type: AVA / AVDA (Exd)
Material quality: Stainless steel A4 (SS316)
Cable entry: M20 x 1.5
Ingress protection class: IP 67 / (Exd / IP68)
Ambient temperature: -40°C ... 85°C
Maximal number of contact clamps: 12

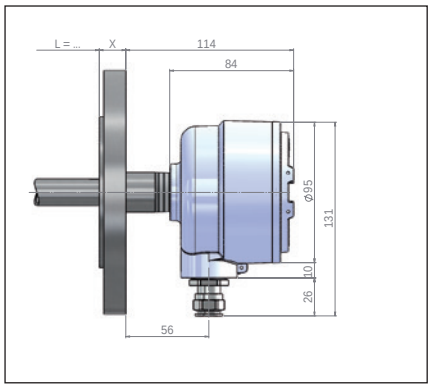

Connection type: ALDA (Exd)
Material quality: Aluminium coated RAL 9006
Cable entry: M20 x 1.5
Ingress protection class: IP 68
Ambient temperature: -40°C ... 100°C
Maximal number of contact clamps: 12

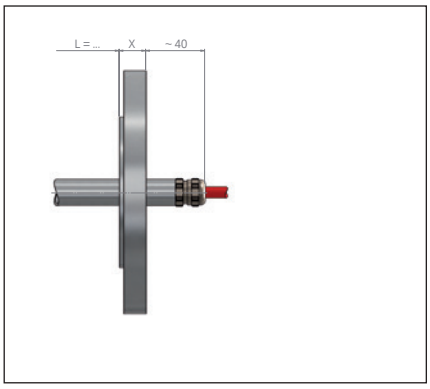

Connection type: K
Material quality: According as cable type
Cable entry: PG or metric
Ingress protection class: IP 55 (optional IP 68)
Ambient temperature: -40°C ... 200°C
Maximal number of contact clamps: -

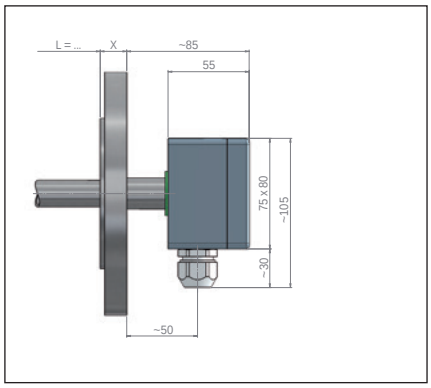

Connection type: APA / APB (Ex)
Material quality: Polyester
Cable entry: M20 x 1.5
Ingress protection class: IP 65
Ambient temperature: -10°C ... 100°C
Maximal number of contact clamps: 12

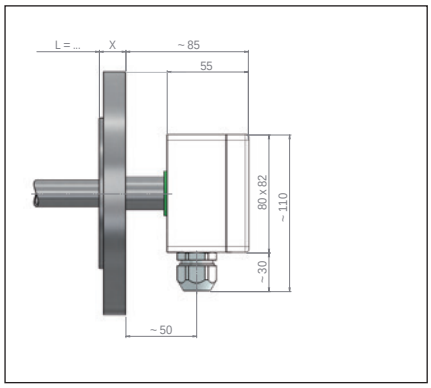

Connection type: ABA
Material quality: ABS
Cable entry: M20 x 1.5
Ingress protection class: IP 65
Ambient temperature: -10°C ... 80°C
Maximal number of contact clamps: 12

The magnetic float switches Horizontal are based on a modular design and can be arranged individually.
Type key page 118 - 120

Heinrich Kübler AG
Ruessenstrasse 4 | CH-6340 Baar | Phone +41 (0)41 766 62 62 | Fax +41 (0)41 766 62 63 | E-Mail info@kubler.ch | Internet www.kubler.ch

Temperature switch

Type:	TO	TS
Function:	Normally closed (NC)	Normally open (NO)
Switching capacity:	230 V / 0.5 A / 40 VA	230 V / 0.5 A / 40 VA
Temperature / Grading:	50°C ... 160°C / 5 K	80°C ... 160°C / 5 K
Accuracy:	± 5 K	± 5 K
Hysteresis:	30 K ± 15 K	30 K ± 15 K

Temperature switch - Pepi

Type:	TPO	TPS
Function:	Normally closed (NC)	Normally open (NO)
Switching capacity:	230 V / 0.5 A / 40 VA	230 V / 0.5 A / 40 VA
Temperature / Grading:	30°C ... 120°C / 5 K	30°C ... 120°C / 5 K
Accuracy:	± 3 K	± 3 K
Hysterese:	± 1 K	± 1 K
Design temperature:	0°C ... 130°C	0°C ... 130°C

Temperature probe

Type:	TFA	TFB
Probe:	Pt 100	Pt 1000
Nominal response temperature:	-70°C ... 400°C	-70°C ... 400°C
Tolerance class:	B	B
Performance:	Acc. to IEC 751	Acc. to IEC 751
Connection:	2- / 3- or 4-wire	2- / 3- or 4-wire

Connection cable

Type	Material quality	Max. Ambient temperature
PVC	PVC connection cable	-20°C ... 80°C
PVCB	PVC connection cable with blue coating	-20°C ... 80°C
SIL	Silicon connection cable	-60°C ... 180°C
PUR	PUR connection cable	-40°C ... 80°C
RAD	Radox connection cable	-35°C ... 120°C
FTEF	Teflon strands	-65°C ... 200°C
FPVC	PVC strands	-5°C ... 70°C

The magnetic float switches Horizontal are based on a modular design and can be arranged individually.
Type key page 118 - 120

Conductive monitoring of fluid levels

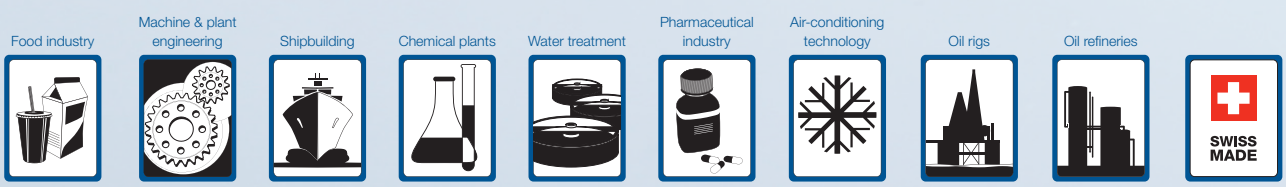

1004

ELECTRODES

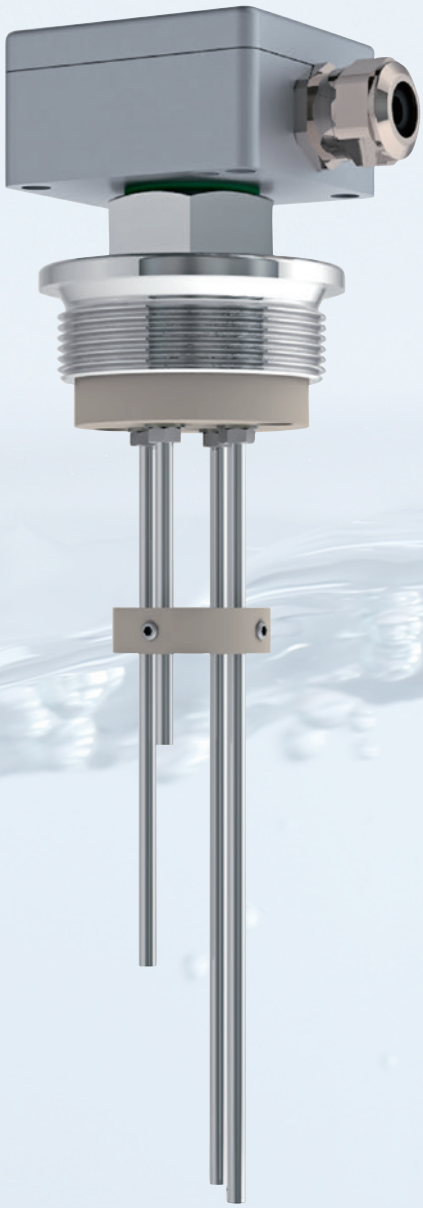

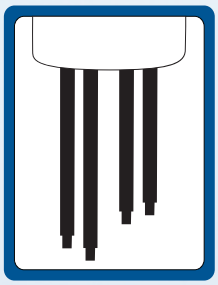

Table of content

Electrodes / Content 140
Electrodes / Function description 141
Electrodes / Type key 142
Electrodes / Type key 143
Electrodes / Stainless steel 144
Electrodes / Stainless steel 145
Electrodes / Stainless steel 146
Electrodes / Stainless steel 147
Electrodes / Stainless steel 148
Electrodes / Electrical connection 149

Heinrich Kübler AG
Ruessenstrasse 4 | CH-6340 Baar | Phone +41 (0)41 766 62 62 | Fax +41 (0)41 766 62 63 | E-Mail info@kubler.ch | Internet www.kubler.ch

Function description

Operating principle

Electrodes work according to the conductive principle in connection with filling level controllers (see chapter 1011). When the electrodes are immersed into an electrically conducting liquid, a control current will flow through the liquid. Via a measuring amplifier a switching contact will be activated by the controlling current.
The current circuit is galvanically isolated from the mains and is operated by protective extra-low-voltage. In order to avoid an electrolytic effect on the electrodes, they are operated with alternating voltage. Depending on the types of electrodes and the filling level controllers in use these
controls are suited for

- High level alarm
- Low level alarm
- Filling up and pumping dry
- Controlling with locking
- Valve opening / closing with locking and protection against dry running

Application

By the help of electrodes controlling may be applied in electrically conducting liquids like e.g. milk, fruit juices, beer, water, sewage, acids, alkaline solutions etc.

Areas of application

- Food industry
- Mechanical engineering
- Building of thermo systems
- Heating systems
- Domestic appliances
- Water treatment
- Vehicle manufacturing
- etc.

Advantages

- No mechanically moved parts
- Compact design
- Independent of specific weight
- Depending on the model, suitable for different types of pressure and temperatures
- Highly efficient cost-benefit ratio

Design limits

Design pressure:	-1 bar ... 60 bar
Design temperature:	-5°C ... 150°C

Code 1

	Key 1 … / … / … - **Electrical connection**		Key 2 … / … / … - **Process connection material quality**		Key 3 … / … / … - **Process connection**
ALE	Aluminium terminal box 64 x 58 x 34 mm	V	Stainless steel	E	Thread upwards, G/BSP
ALF	Aluminium terminal box 80 x 75 x 57 mm	TI	Titanium	R	Thread downwards, G/BSP
ALG	Aluminium terminal box 100 x 100 x 81 mm	HC	Alloy C	ENPT	Thread upwards, NPT
AVA	Stainless steel terminal box Ø 82 x 110 mm	P	PVC	RNPT	Thread downwards, NPT
APA	Polyester terminal box 80 x 75 x 55 mm	PP	Polypropylene	EM	Thread upwards, metric
ABA	ABS terminal box 80 x 82 x 55 mm	PF	PVDF	RM	Thread downwards, metric
K	Connection cable			FE	Flange according to EN
K68	Connection cable IP68 (≥ G 3/8“)			FA	Flange according to ANSI
				F	Flange according to …
				FS	Flange according to drawing
				OP	Without process connection
				BK	Aseptic blind cone according to DIN 11851
				BKN	Aseptic blind cone according to DIN 11851 with groove nut
				BK64	Aseptic blind cone acc. to DIN 11864/1 form A
				BKN64	Aseptic blind cone acc. to DIN 11864/1 form A with groove nut
				BKD1	Try-Clamp according to DIN 32676
				BKND1	Try-Clamp according to DIN 32676 with clamp

Code 2

	Key 1 … - **Threaded connection**		Key 1 … - **Aseptic cone**
…	Threaded connection size	…	Nominal size

Code 2

	Key 1.1 (only for flange) … / … / … - **Flange connection**		Key 1.2 (only for flange) … / … / … - **Flange connection**		Key 1.3 (only for flange) … / … / … - **Flange connection**
…	Flange nominal bore	…	Flange pressure rating	…	Flange facing

Code 3

	Key 1 … / … - **Electrodes material quality**		Key 2 … / … - **Number of electrodes**
V	Stainless steel	1	1 piece
TI	Titanium	2	2 pieces
HC	Alloy C	3	3 pieces
		4	4 pieces
		5	5 pieces
		6	6 pieces

Example

Code	1					2					3			
Key	1	/	2	/	3	-	1.1	/	1.2	/	1.3	-	1	/	2	-
Example	ALE	/	V	/	FE	-	80	/	16	/	B1	-	V	/	5	-

Black = not possible according to Atex / Blue = possible according to Atex Exia / Blue[1] = possible according to Atex Exia and Exd / Black[1] = possible according to Atex Exd

Heinrich Kübler AG
Ruessenstrasse 4 | CH-6340 Baar | Phone +41 (0)41 766 62 62 | Fax +41 (0)41 766 62 63 | E-Mail info@kubler.ch | Internet www.kubler.ch

Code 4

	Key 1 ... / ... / ... / ... / ... / ... / ... - **1. Length of electrode**		Key 2 ... / ... / ... / ... / ... / ... / ... - **2. Length of electrode**		Key 3 ... / ... / ... / ... / ... / ... / ... - **3. Length of electrode**
L...	Length of electrode in mm	L...	Length of electrode in mm	L...	Length of electrode in mm

Code 4

	Key 4 ... / ... / ... / ... / ... / ... / ... - **4. Length of electrode**		Key 5 ... / ... / ... / ... / ... / ... / ... - **5. Length of electrode**		Key 6 ... / ... / ... / ... / ... / ... / ... - **6. Length of electrode**
L...	Length of electrode in mm	L...	Length of electrode in mm	L...	Length of electrode in mm

Code 4

	Key 7 ... / ... / ... / ... / ... / ... / ... - **Diameter of electrode(s)**
04	Ø 4 mm
10	Ø 10 mm

Code 5

	Key 1 ... - **Additional design**
VE	Adjustable version with cutting ring union
HD	High pressure version

Code 6

	Key 1 ... / ... / ... - **Length of cable**		Key 2 ... / ... / ... - **Connection cable**		Key 3 ... / ... / ... - **Connection cable option**
...	Length of cable in meter	PVC	PVC connection cable	KA	Shielded
		SIL	Silicone connection cable	KB	Shielded / oil-resistant
		PUR	PUR connection cable	KC	Shielded / oil-resistant / halogen-free
				KD	Oil-resistant
				KE	Oil-resistant / halogen-free
				KF	Halogen-free

Code 7

	Key 1 ... - **Approvals**
PEDII	According to PED 97/23/EC, category II
PEDIV	According to PED 97/23/EC, category IV

Example

	4																		5		6								7		**Code**
1	/	2	/	3	/	4	/	5	/	6	/	7	-	1	-	1	/	2	/	3	-	1									**Key**
L100	/	L200	/	L300	/	L400	/	L500	/		/	04	-	VE	-	1	/	PVC	/	KA	-										**Example**

Black = not possible according to Atex / Blue = possible according to Atex Exia / Blue[1] = possible according to Atex Exia and Exd / Black[1] = possible according to Atex Exd

Type	**K/V/R-1/4-V/1-L../04-../PVC**
Material quality:	1.4404 / 1.4435 / 1.4571 (316L / 316Ti)
Electrical connection:	Connection cable
Ambient temperature	
- with PVC connection cable:	-5°C ... 80°C
- with Silicone connection cable:	-5°C ... 100°C
- with PUR connection cable:	-5°C ... 80°C
Process connection:	G 1/4“
Process connection material quality:	1.4404 / 1.4435 / 1.4571 (316L / 316Ti)
Electrode	
Diameter of electrode(s):	Ø 4 mm / with insulation Ø 8 mm
Solid:	-
Length of electrode(s):	≤ 3000 mm
Number of electrodes:	1 piece
Insulation:	PTFE
Thickness of insulation:	2 mm
Adjustable:	-
Design pressure:	0 bar ... 1 bar
Design temperature:	-5°C ... 100°C
Ingress protection class:	IP 55
Conductive level controller:	Control units 1011 / 7201…

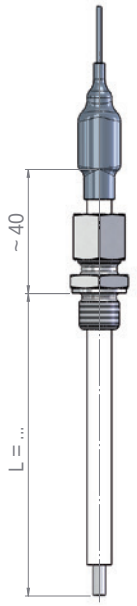

Type	**K/V/R-1/4-V/1-L../04-VE-../PVC**
Material quality:	1.4404 / 1.4435 / 1.4571 (316L / 316Ti)
Electrical connection:	Connection cable
Ambient temperature	
- with PVC connection cable:	-5°C ... 80°C
- with Silicone connection cable:	-5°C ... 100°C
- with PUR connection cable:	-5°C ... 80°C
Process connection:	G 1/4“
Process connection material quality:	1.4404 / 1.4435 / 1.4571 (316L / 316Ti)
Electrode	
Diameter of electrode(s):	Ø 4 mm / with insulation Ø 8 mm
Solid:	Yes
Length of electrode(s):	≤ 3000 mm
Number of electrodes:	1 piece
Insulation:	PTFE
Thickness of insulation:	2 mm
Adjustable:	Yes
Design pressure:	0 bar ... 1 bar
Design temperature:	-5°C ... 100°C
Ingress protection class:	IP 55
Conductive level controller:	Control units 1011 / 7201…

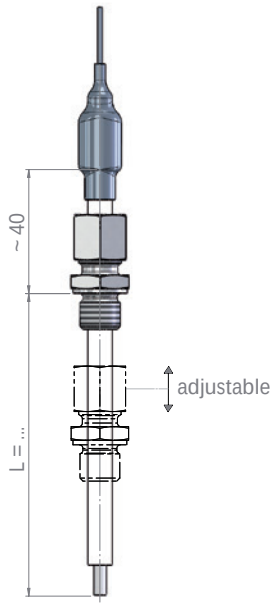

The electrodes are based on a modular design and can be arranged individually.
Type key page 142 - 143

Heinrich Kübler AG
Ruessenstrasse 4 | CH-6340 Baar | Phone +41 (0)41 766 62 62 | Fax +41 (0)41 766 62 63 | E-Mail info@kubler.ch | Internet www.kubler.ch

Type **K/V/R-3/8-V/1-L../10-../PVC**

Material quality:	1.4404 / 1.4435 / 1.4571 (316L / 316Ti)
Electrical connection:	Connection cable
Ambient temperature	
- with PVC connection cable:	-5°C ... 80°C
- with Silicone connection cable:	-5°C ... 100°C
- with PUR connection cable:	-5°C ... 80°C
Process connection:	G 3/8“
Process connection material quality:	1.4404 / 1.4435 / 1.4571 (316L / 316Ti)
Electrode	
Diameter of electrode(s):	Ø 10 mm / with insulation Ø 12 mm
Solid:	-
Length of electrode(s):	≤ 3000 mm
Number of electrodes:	1 piece
Insulation:	PTFE
Thickness of insulation:	1 mm
Adjustable:	-
Design pressure:	0 bar ... 1 bar
Design temperature:	-5°C ... 100°C
Ingress protection class:	IP 55
Conductive level controller:	Control units 1011 / 7201…

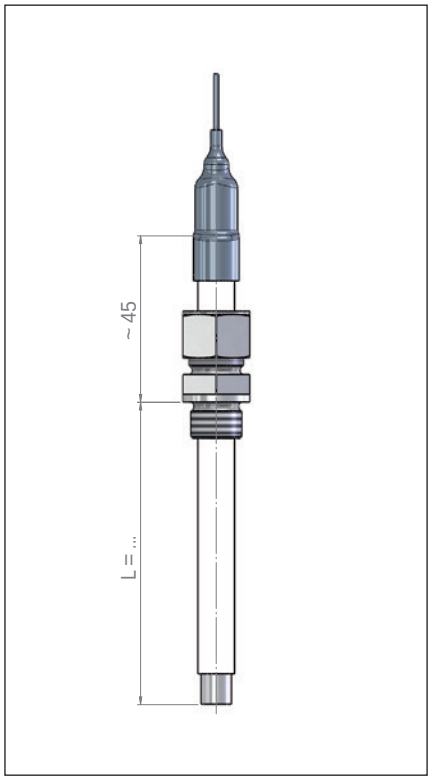

Type **K/V/R-3/8-V/1-L../10-VE-../PVC**

Material quality:	1.4404 / 1.4435 / 1.4571 (316L / 316Ti)
Electrical connection:	Connection cable
Ambient temperature	
- with PVC connection cable:	-5°C ... 80°C
- with Silicone connection cable:	-5°C ... 100°C
- with PUR connection cable:	-5°C ... 80°C
Process connection:	G 3/8“
Process connection material quality:	1.4404 / 1.4435 / 1.4571 (316L / 316Ti)
Electrode	
Diameter of electrode(s):	Ø 10 mm / with insulation Ø 12 mm
Solid:	-
Length of electrode(s):	≤ 3000 mm
Number of electrodes:	1 piece
Insulation:	PTFE
Thickness of insulation:	1 mm
Adjustable:	Yes
Design pressure:	0 bar ... 1 bar
Design temperature:	-5°C ... 100°C
Ingress protection class:	IP 55
Conductive level controller:	Control units 1011 / 7201…

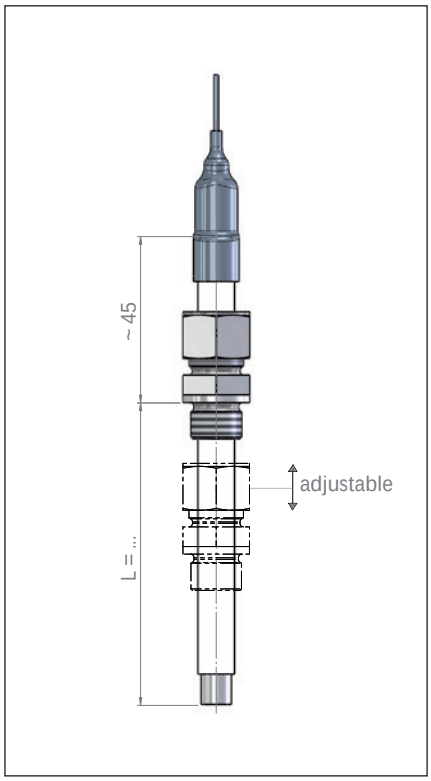

The electrodes are based on a modular design and can be arranged individually.
Type key page 142 - 143

Type	**K/V/R-1/2-V/1-L../10-../PVC**
Material quality:	1.4404 / 1.4435 / 1.4571 (316L / 316Ti)
Electrical connection:	Connection cable
Ambient temperature	
- with PVC connection cable:	-5°C ... 80°C
- with Silicone connection cable:	-5°C ... 100°C
- with PUR connection cable:	-5°C ... 80°C
Process connection:	G 1/2“
Process connection material quality:	1.4404 / 1.4435 / 1.4571 (316L / 316Ti)
Electrode	
Diameter of electrode(s):	Ø 10 mm / with insulation Ø 12 mm
Solid:	-
Length of electrode(s):	≤ 3000 mm
Number of electrodes:	1 piece
Insulation:	PTFE
Thickness of insulation:	1 mm
Adjustable:	-
Design pressure:	0 bar ... 1 bar
Design temperature:	-5°C ... 100°C
Ingress protection class:	IP 55
Conductive level controller:	Control units 1011 / 7201…

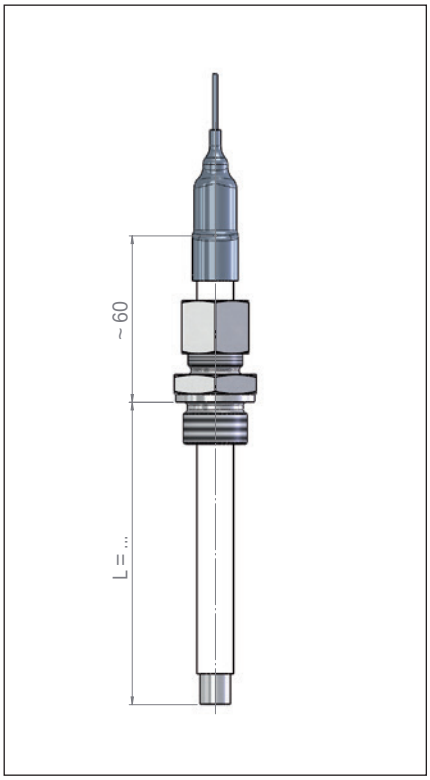

Type	**K/V/R-1/2-V/1-L../10-VE-../PVC**
Material quality:	1.4404 / 1.4435 / 1.4571 (316L / 316Ti)
Electrical connection:	Connection cable
Ambient temperature	
- with PVC connection cable:	-5°C ... 80°C
- with Silicone connection cable:	-5°C ... 100°C
- with PUR connection cable:	-5°C ... 80°C
Process connection:	G 1/2“
Process connection material quality:	1.4404 / 1.4435 / 1.4571 (316L / 316Ti)
Electrode	
Diameter of electrode(s):	Ø 10 mm / with insulation Ø 12 mm
Solid:	Yes
Length of electrode(s):	≤ 3000 mm
Number of electrodes:	1 piece
Insulation:	PTFE
Thickness of insulation:	1 mm
Adjustable:	Yes
Design pressure:	0 bar ... 1 bar
Design temperature:	-5°C ... 100°C
Ingress protection class:	IP 55
Conductive level controller:	Control units 1011 / 7201…

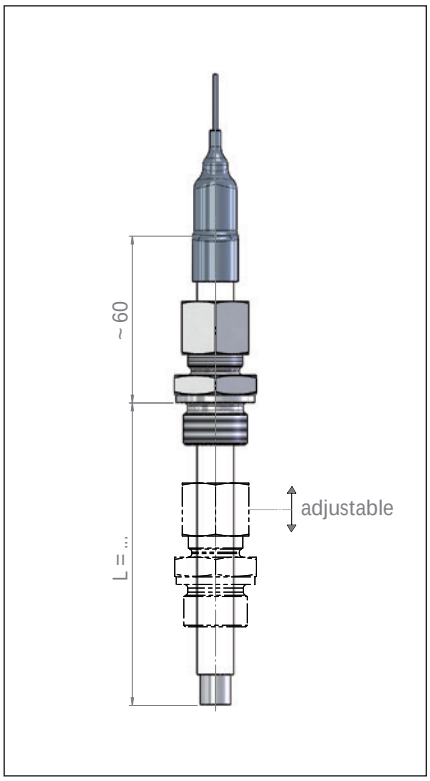

The electrodes are based on a modular design and can be arranged individually.
Type key page 142 - 143

Heinrich Kübler AG
Ruessenstrasse 4 | CH-6340 Baar | Phone +41 (0)41 766 62 62 | Fax +41 (0)41 766 62 63 | E-Mail info@kubler.ch | Internet www.kubler.ch

Type	**APA/V/R-3/8-V/1-L../10**
Material quality:	1.4404 / 1.4435 / 1.4571 (316L / 316Ti)
Electrical connection:	Polyester terminal box
Ambient temperature:	-10°C ... 100°C
Cable entry:	M20 x 1.5
Process connection:	G 3/8“
Process connection material quality:	1.4404 / 1.4435 / 1.4571 (316L / 316Ti)
Electrode	
Diameter of electrode(s):	Ø 10 mm / with insulation Ø 12 mm
Solid:	-
Length of electrode(s):	≤ 3000 mm
Number of electrodes:	1 piece
Insulation:	PTFE
Thickness of insulation:	1 mm
Adjustable:	-
Design pressure:	0 bar ... 1 bar
Design temperature:	-5°C ... 100°C
Ingress protection class:	IP 65
Conductive level controller:	Control units 1011 / 7201…

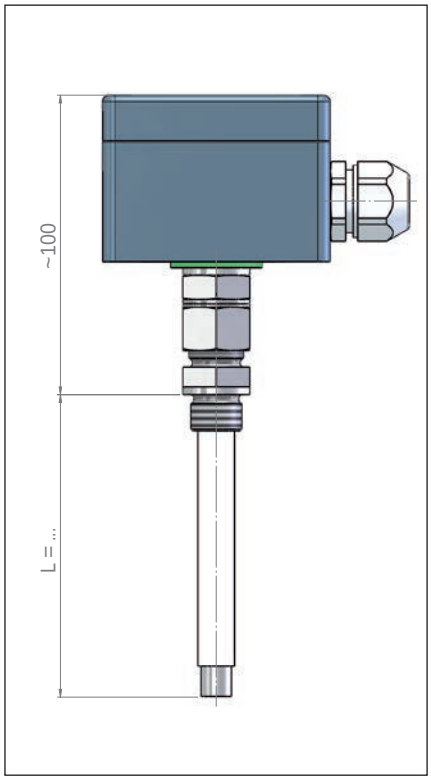

Type	**ALE/V/R-1/2-V/1-L../10-HD**
Material quality:	1.4404 / 1.4435 / 1.4571 (316L / 316Ti)
Electrical connection:	Aluminium terminal box
Ambient temperature:	-10°C ... 100°C
Cable entry:	M20 x 1.5
Process connection:	G 1/2“
Process connection material quality:	1.4404 / 1.4435 / 1.4571 (316L / 316Ti)
Electrode	
Diameter of electrode(s):	Ø 10 mm
Solid:	-
Length of electrode(s):	≤ 1000 mm
Number of electrodes:	1 piece
Insulation:	ceramic
Thickness of insulation:	-
Adjustable:	-
Design pressure:	0 bar ... 60 bar
Design temperature:	-5°C ... 150°C
Ingress protection class:	IP 65
Conductive level controller:	Control units 1011 / 7201…

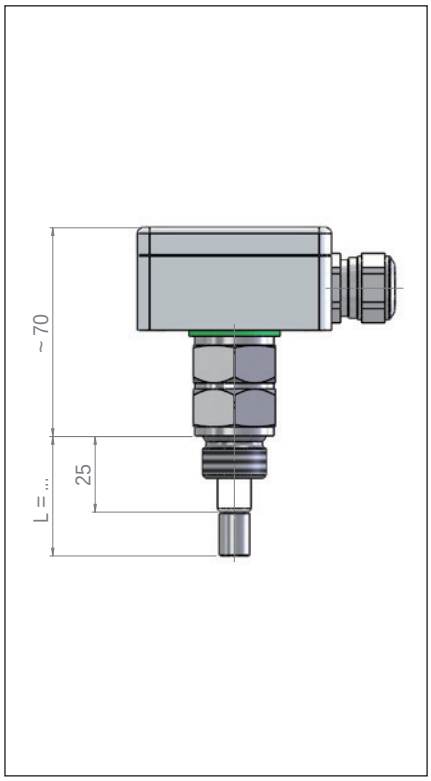

The electrodes are based on a modular design and can be arranged individually.
Type key page 142 - 143

Type	**APA/PP/R-1½-V/3-L../L../L../04**
Material quality:	1.4404 / 1.4435 / 1.4571 (316L / 316Ti)
Electrical connection:	Polyester terminal box
Ambient temperature:	-10°C ... 100°C
Cable entry:	M20 x 1.5
Process connection:	G 1½“
Process connection material quality:	Polypropylene
Electrode	
Diameter of electrode(s):	Ø 4 mm / with insulation Ø 6 mm
Solid:	-
Length of electrode(s):	≤ 3000 mm
Number of electrodes:	3 pieces
Insulation:	Polyolefin
Thickness of insulation:	1 mm
Adjustable:	-
Design pressure:	0 bar ... 1 bar
Design temperature:	-5°C ... 80°C
Ingress protection class:	IP 65
Conductive level controller:	Control units 1011 / 7201…

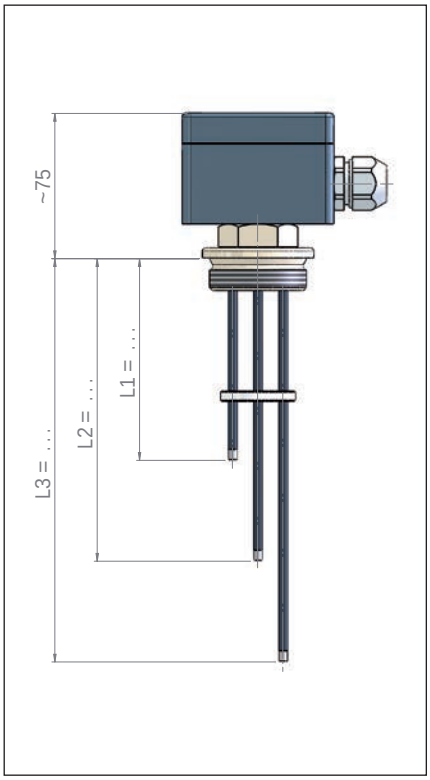

Type	**APA/PP/R-2-V/5-L../L../L../L../L../04**
Material quality:	1.4404 / 1.4435 / 1.4571 (316L / 316Ti)
Electrical connection:	Polyester terminal box
Ambient temperature:	-10°C ... 100°C
Cable entry:	M20 x 1.5
Process connection:	G 2“
Process connection material quality:	Polypropylene
Electrode	
Diameter of electrode(s):	Ø 4 mm / with insulation Ø 6 mm
Solid:	-
Length of electrode(s):	≤ 3000 mm
Number of electrodes:	5 pieces
Insulation:	Polyolefin
Thickness of insulation:	1 mm
Adjustable:	-
Design pressure:	0 bar ... 1 bar
Design temperature:	-5°C ... 80°C
Ingress protection class:	IP 65
Conductive level controller:	Control units 1011 / 7201…

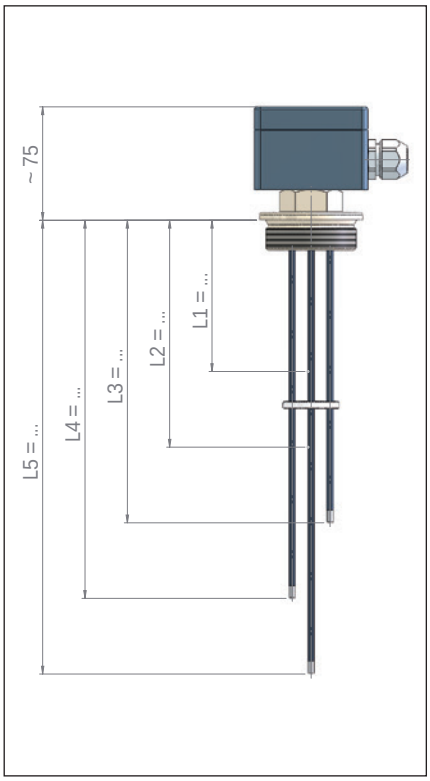

The electrodes are based on a modular design and can be arranged individually.
Type key page 142 - 143

Heinrich Kübler AG
Ruessenstrasse 4 | CH-6340 Baar | Phone +41 (0)41 766 62 62 | Fax +41 (0)41 766 62 63 | E-Mail info@kubler.ch | Internet www.kubler.ch

Electrical connection

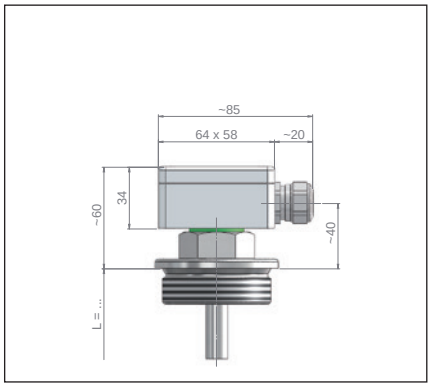

Connection type: ALE
Material quality: Aluminium coated RAL 7001
Cable entry: M20 x 1.5
Ingress protection class: IP 65
Ambient temperature: -40°C ... 100°C

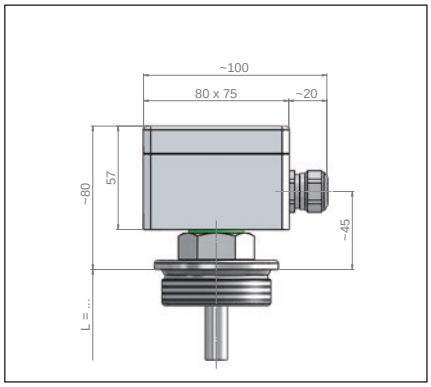

Connection type: ALF
Material quality: Aluminium coated RAL 7001
Cable entry: M20 x 1.5
Ingress protection class: IP 65
Ambient temperature: -40°C ... 100°C

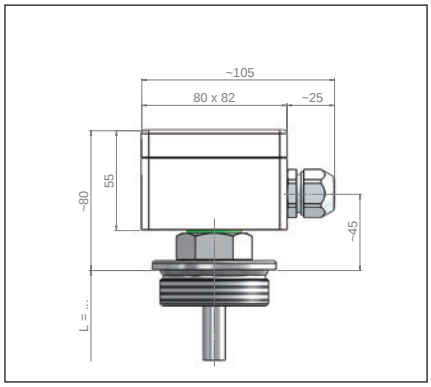

Connection type: ABA
Material quality: ABS
Cable entry: M20 x 1.5
Ingress protection class: IP 65
Ambient temperature: -10°C ... 80°C

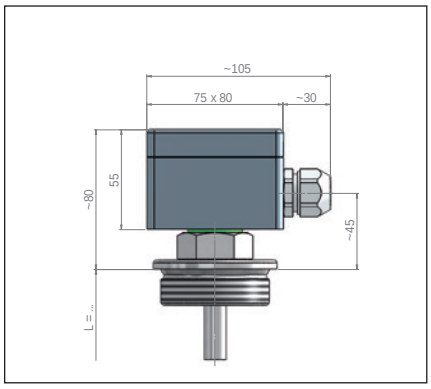

Connection type: APA
Material quality: Polyester
Cable entry: M20 x 1.5
Ingress protection class: IP 65
Ambient temperature: -10°C ... 100°C

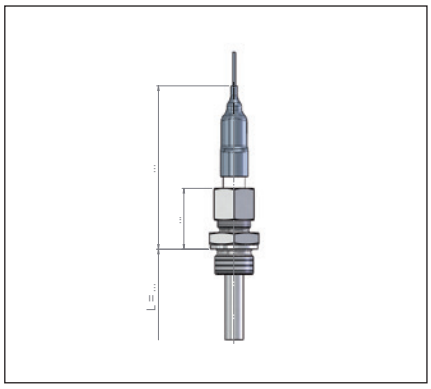

Connection type: K
Material quality: According as cable type
Cable entry: PG or metric
Ingress protection class: IP 55 (optional IP 68)
Ambient temperature: -65°C ... 200°C

The electrodes are based on a modular design and can be arranged individually.
Type key page 142 - 143

Recording and controlling of flow

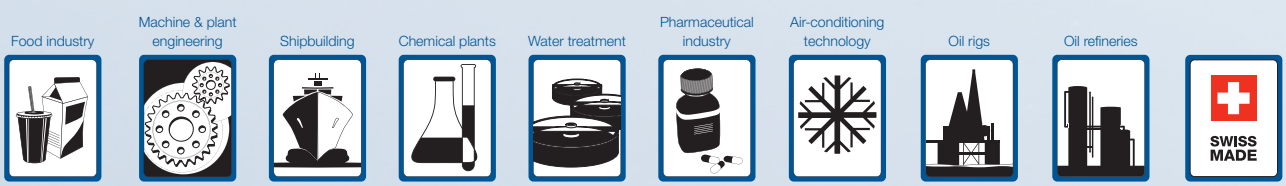

1007

FLOW CONTROLLER

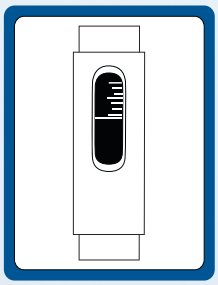

Table of content

Flow Controller / Content ... 152
Flow Controller / Functional description ... 153
Flow Controller / Type key ... 154
Flow Controller / Type key ... 155
Flow Controller for water independent of position ... 156
Flow Controller for water independent of position ... 157
Flow Controller for water independent of position ... 158
Flow Controller for water independent of position ... 159
Flow Controller for water independent of position ... 160
Flow Controller for water independent of position ... 161
Flow Controller for water dependent of position ... 162
Flow Controller for water dependent of position ... 163
Flow Controller for water dependent of position ... 164
Flow Controller for air independent of position ... 165
Flow Controller for air independent of position ... 166
Flow Controller for air dependent of position ... 167
Flow Controller for air dependent of position ... 168
Flow Controller for air dependent of position ... 169
Flow Controller for oil independent of position ... 170
Flow Controller for oil independent of position ... 171
Flow Controller for oil independent of position ... 172
Flow Controller for oil independent of position ... 173
Flow Controller for oil independent of position ... 174
Flow Controller / Switching capacity ... 175
Flow Controller for water independent of position ... 176
Flow Controller for water independent of position ... 177
Flow Controller for water dependent of position ... 178
Flow Controller for water dependent of position ... 179
Flow Controller for air dependent of position ... 180
Flow Controller for air dependent of position ... 181

Heinrich Kübler AG
Ruessenstrasse 4 | CH-6340 Baar | Phone +41 (0)41 766 62 62 | Fax +41 (0)41 766 62 63 | E-Mail info@kubler.ch | Internet www.kubler.ch

Functional description

Operating principle

The flow controller work according to the floated element measuring principle. The floated element is conducted into a cylindrical slit nozzle. Depending on the design the installation of the flow controller may be position-dependent (only floated element) or independent of position (floated element plus spring).
Outside of the flowing circuit a reed contact (protective gas contact) is installed. The reed contact is infused into a steplessly adjustable casing (switch housing) and thus protected from external influences. The inflowing medium moves floated element in the direction of the flow-through. Once the floated element with its integrated magnets has reached the position of the reed contact, the contact blades will close. When the flow rate increases, the variable area float will move farther in the flow direction, at a maximum to the end stop. The latter prevents the floated element from driving over the switching area of the reed contact (bistable property).

Application areas

Monitoring of liquids and gaseous liquids, e.g. in cooling systems and cooling circuits of welding machines, laser and piping systems, pumps, compressors, hydraulic systems etc..

Switch point and switching area

The switch point can be steplessly reset within the switching area. According to the existing flow speeds the actual flow-through may considerably exceed the maximum scale value.

Switching hysteresis

That is the distance passed through by the floated element between the switching positions of On and Off. By the selection of reed contacts with a close differential the typical hysteresis of the uplift of the variable area float lies at 2-3 mm.

Dependence on position

The device must be installed vertically, i.e. the flow-through will go from bottom to top.

Random position of installation

Due to the installation of a spring, which puts the floated element into its original position, the position of installation is random.
Due to the artificial aging and the pre-tensioning of the spring no readjustment is needed.

Compensation of viscosity

This will be accomplished through the installation of a spring in connection with a pinhole aperture. Due to the artificial aging of the spring no readjustment is needed.

Service note

The flow controller are maintenance-free by design. Only with media that contain magnetic particles a cleaning at regular intervals should take place. These cleaning intervals may be considerably extended by the use of a filter which contains a magnet separator.

Instruction for installation:

1. Position-dependent devices

The installation of the flow controller takes place in a vertical position in the system. The flow-through takes place from bottom to top.

2. Devices irrespective of the position

The installation of the flow controller takes place randomly in the system. The flow-through takes place in the direction from the lower scale value towards the higher scale value.

3. Devices with compensation of viscosity

The installation of the flow controller takes place randomly in the system. The flow-through takes place in the direction from the lower scale value to the higher scale value.

4. Medium

The medium may not carry along solids. We recommend the installation of a dirt trap.

5. Contacts

There may be no devices equipped with contacts within the induction field.

6. Electrical maximum values

The electrical maximum values of the reed contact need to be strictly regarded.

7. Setting of the switch point

For the setting of the switch point the arrow on the switch housing needs to be adjusted to the desired switch-off amount noted on the scale of the device casing.

Design limits

Viscosity range:	30 cSt ... 600 cSt
Design pressure:	-1 bar ... 300 bar
Design temperature:	-20°C ... 160°C

Code 1

	Key 1 … / … - **Flow controller**		Key 2 … / … - **Flow controller switching range**
RVOU4	Flow controller with sight glass for water	…	Switching range
RVOU2	Flow controller with sight glass for water		(see the relevant catalog page)
RVOU1	Flow controller with sight glass for water		
RVMU4	Flow controller for water		
RVMU2	Flow controller for water		
RVMU1	Flow controller for water		
RVMUM	Flow controller for water		
DUG	Flow controller with sight glass for water		
DUM	Flow controller for water		
DUMA	Flow controller with analogue display for water		
DWG	Flow controller with sight glass for water		
DWM	Flow controller for water		
DWMA	Flow controller with analogue display for water		
RVOUL4	Flow controller with sight glass for air		
RVOUL2	Flow controller with sight glass for air		
RVOUL1	Flow controller with sight glass for air		
RVMUL4	Flow controller for air		
RVMUL2	Flow controller for air		
RVMUL1	Flow controller for air		
DWGL	Flow controller with sight glass for air		
DWML	Flow controller for air		
DWMAL	Flow controller with analogue display for air		
DKG2	Flow controller with sight glass for oil / viscosity compensated		
DKG1	Flow controller with sight glass for oil / viscosity compensated		
DKM2	Flow controller for oil / viscosity compensated		
DKM1	Flow controller for oil / viscosity compensated		
DKMA1	Flow controller with analogue display for oil / viscosity compensated		
DKME1	Flow controller for oil / viscosity compensated		
DKMEA1	Flow controller with analogue display for oil / viscosity compensated		
DP65[1]	Flow controller with analogue display for water		
SC250[1]	Flow controller with analogue display for water		
SCL250[1]	Flow controller with analogue display for air		

Code 2

	Key 1 … - **Threaded connection**
GM	Female thread G
GN	Male thread G

Code 3

	Key 1 … - **Threaded connection size**
…	Threaded connection size

Example

Code	1				2		3		4		5						6		7		8
Key	1	/	2	-	1	-	1	-	1	-	1	/	2	/	3	-	1	-	1	-	1
Example	RVOU1	/	30	-	GM	-	1	-	V	-	S	/	HT	/	KV	-	SOK	-	NBR	-	EXM

Black = not possible according to Atex / Blue = possible according to Atex Exm / Black[1] = possible according to Atex Exia

Heinrich Kübler AG
Ruessenstrasse 4 | CH-6340 Baar | Phone +41 (0)41 766 62 62 | Fax +41 (0)41 766 62 63 | E-Mail info@kubler.ch | Internet www.kubler.ch

Code 4

	Key 1 ... - **Material quality**
V	Stainless steel
ME	Brass
STPA	Steel Polyamide 11 coated (only DP65)

Code 5

	Key 1 ... / ... / ... - **Switch function**		Key 2 ... / ... / ... - **Switch function option**		Key 3 ... / ... / ... - **Electrical connection**
S	Normally open (NO)	HT	High temperature version	ASH	Connector in polyamide acc. to DIN 43650 with cable entry PG11
SS	Normally open (NO) 2 pieces			KV	Connection cable grouted 2 m
U	Change over (SPDT)				
UU	Change over (SPDT) 2 pieces				

Code 5 (only DP65 / SC250 / SCL250)

	Key 1 ... - **Switch function / Analogue output**
U	Change over (SPDT)
UU	Change over (SPDT) 2 pieces
A2[1]	Current output 4 ... 20 mA / 2-wire

Code 6

	Key 1 ... - **Scale**
SOK	Scale according to customers information

Code 7

	Key 1 ... - **Gasket (not applicable for DP65 / SC250 / SCL250)**
NBR	NBR e.g. Perbunan® / -20 ... 120°C (for water)
EPDM	EPDM e.g. Vistalon® / -20 ... 160°C (for water)
FKM	FKM e.g. Viton® / -20 ... 160°C (for oil)

Code 8

	Key 1 ... - **Approvals**
EXM	Acc. to Exm
EXIAG[1]	Acc. to Exia, atmosphere gas (only DP65 / SC250 / SCL250)
EAC2	Approval EAC TR CU 004/2011 & 020/2011

Example

Code	1			2	3	4	5							6	7	8
Key	1 / 2	-	1	-	1	-	1	/	2	/	3	-	1	-	1	- 1
Example	RVOU1 / 30	-	GM	-	1	-	V	-	S	/	HT	/	KV	- SOK	- NBR	- EXM

Black = not possible according to Atex / Blue = possible according to Atex Exm / Black[1] = possible according to Atex Exia

Type **RVOU..** **for water independent of position**

Material quality:	Brass nickel plated Stainless steel 1.4571
Electrical connection / Ingress protection class:	Connector DIN 43650 / IP 65 ATEX - 2 m PVC connection cable / IP 67
Process connection:	Female thread G
Display:	Sight glass Duran® 50
Design pressure:	0 bar ... see table
Design temperature:	-20°C ... 100°C (optional 160°C)
Viscosity range:	-
Accuracy:	±10 % of full scale
Gasket:	Brass - NBR (optional FKM, EPDM) Stainless steel - FKM (optional NBR, EPDM)
Mounting position:	Independent of position
Approvals:	ATEX II 2 G Ex mb II T6 - T5 ATEX II 2 D Ex tD A21 IP67 T80°C - T100°C EAC TR CU 004/2011 & 020/2011

Flow switch function

Function:	Normally open (NO)
Switching capacity:	Page 175
Switching capacity / ATEX Exmb:	Page 175
Maximal number of contacts:	1 piece (optional 2 pieces)
	Optional
Function:	Change over (SPDT)
Switching capacity:	Page 175
Switching capacity / ATEX Exmb:	Page 175
Maximal number of contacts:	1 piece (optional 2 pieces)

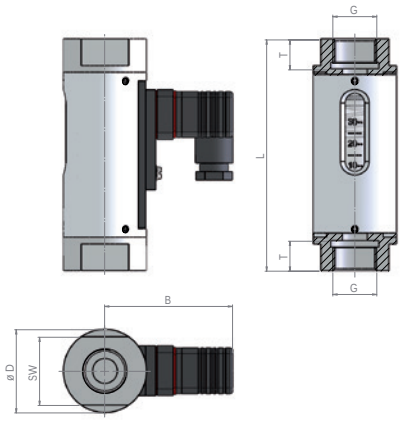

Type		Max. Design pressure	Pressure drop	G	SW	D	D1	B	T	L	Weight	ATEX Approvals
	l/min	bar	bar	mm	mm	mm	mm	mm	mm	mm	g	
RVOU4/01	0,005 - 0,06	16	0,02 ... 0,2	1/4"	17	20	-	49	10	90	140	No
RVOU4/02	0,025 - 0,13											
RVOU4/03	0,06 - 0,3											
RVOU4/06	0,1 - 0,6											
RVOU4/1	0,2 - 1,2											
RVOU4/2	0,4 - 2											
RVOU4/3	0,5 - 3											
RVOU4/5	1 - 5											
RVOU2/05	0,2 - 0,5	16	0,02 - 0,3	1/2"	27	32	-	53	14	114	300	No
RVOU2/1	0,3 - 1											
RVOU2/2	0,7 - 2											
RVOU2/4	1,6 - 4											
RVOU2/8	3 - 8											
RVOU2/12	4,5 - 12											
RVOU2/15	6 - 15											
RVOU2/20	8 - 20											
RVOU2/24	9,5 - 24											
RVOU2/28	12 - 28											
RVOU1/30	8 - 30	10	0,02 - 0,4	3/4" 1"	41	50	-	77	18	139 158	800 900	Yes
RVOU1/45	15 - 45											
RVOU1/90	30 - 90											
RVOU1/150	60 - 150	10	0,02 - 0,4	1"	41	50	-	77	18	158	900	Yes

The flow controller are based on a modular design and can be conditionally arranged individually.
Type key page 154 - 155

Heinrich Kübler AG
Ruessenstrasse 4 | CH-6340 Baar | Phone +41 (0)41 766 62 62 | Fax +41 (0)41 766 62 63 | E-Mail info@kubler.ch | Internet www.kubler.ch

Type **RVMU..** **for water independent of position**

Material quality:	Brass nickel plated Stainless steel 1.4571
Electrical connection / Ingress protection class:	Connector DIN 43650 / IP 65 ATEX - 2 m PVC connection cable / IP 67
Process connection:	Female thread G
Display:	-
Design pressure:	0 bar ... see table
Design temperature:	-20°C ... 100°C (optional 160°C)
Viscosity range:	-
Accuracy:	±10 % of full scale
Gasket:	Brass - NBR (optional FKM, EPDM) Stainless steel - FKM (optional NBR, EPDM)
Mounting position:	Independent of position
Approvals:	ATEX II 2 G Ex mb II T6 - T5 ATEX II 2 D Ex tD A21 IP67 T80°C - T100°C EAC TR CU 004/2011 & 020/2011

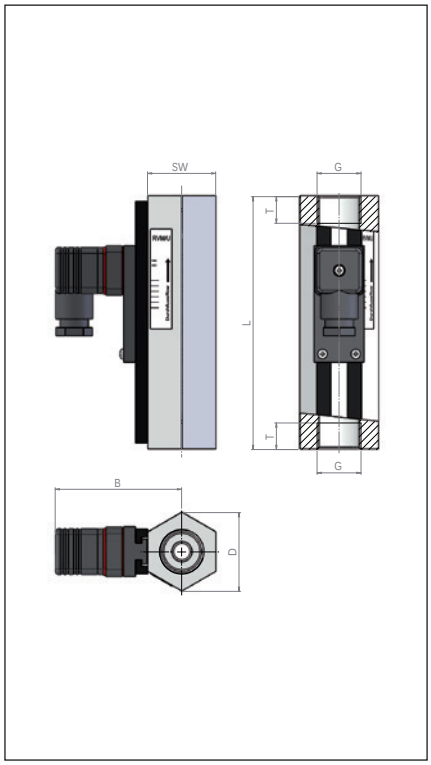

Flow switch function

Function:	Normally open (NO)
Switching capacity:	Page 175
Switching capacity / ATEX Exmb:	Page 175
Maximal number of contacts:	1 piece (optional 2 pieces)
	Optional
Function:	Change over (SPDT)
Switching capacity:	Page 175
Switching capacity / ATEX Exmb:	Page 175
Maximal number of contacts:	1 piece (optional 2 pieces)

Type		Max. Design pressure	Pressure drop	G	SW	D	D1	B	T	L	Weight	ATEX Approvals
	l/min	bar	bar	mm	mm	mm	mm	mm	mm	mm	g	
RVMU4/01	0,005 - 0,06	300	0,02 ... 0,2	1/4"	17	17	-	47	10	65	140	No
RVMU4/02	0,04 - 0,13											
RVMU4/06	0,1 - 0,6											
RVMU4/1	0,2 - 1,2											
RVMU4/2	0,4 - 2											
RVMU4/3	0,5 - 3											
RVMU4/5	1 - 5											
RVMU2/02	0,02 - 0,2	300	0,02 - 0,3	1/2"	27	31	-	52	14	90	350	Yes
RVMU2/06	0,2 - 0,6											
RVMU2/1	0,4 - 1,8											
RVMU2/3	0,8 - 3,2											
RVMU2/7	2 - 7											
RVMU2/13	3 - 13											
RVMU2/20	4 - 20											
RVMU2/30	8 - 30											
RVMU1/30	10 - 30	250	0,02 - 0,4	3/4" 1"	41	47	-	76	21 17	152 130	1200 1050	Yes
RVMU1/45	15 - 45											
RVMU1/60	20 - 60											
RVMU1/90	30 - 90											
RVMU1/150	60 - 150	250	0,02 - 0,4	1"	41	47	-	76	17	130	1050	Yes

The flow controller are based on a modular design and can be conditionally arranged individually.
Type key page 154 - 155

Type **RVMUM..** **for water independent of position**

Material quality:	Brass nickel plated
	Stainless steel 1.4571
Electrical connection / Ingress protection class:	Connector DIN 43650 / IP 65
	ATEX - 2 m PVC connection cable / IP 67
Process connection:	Female thread G
Display:	-
Design pressure:	0 bar ... see table
Design temperature:	-20°C ... 120°C (optional 160°C)
Viscosity range:	-
Accuracy:	±10 % of full scale
Gasket:	Brass - NBR (optional FKM, EPDM)
	Stainless steel - FKM (optional NBR, EPDM)
Mounting position:	Independent of position
Approvals:	ATEX II 2 G Ex mb II T6 - T5
	ATEX II 2 D Ex tD A21 IP67 T80°C - T100°C
	EAC TR CU 004/2011 & 020/2011

Flow switch function

Function:	Normally open (NO)
Switching capacity:	Page 175
Switching capacity / ATEX Exmb:	Page 175
Maximal number of contacts:	1 piece (optional 2 pieces)
	Optional
Function:	Change over (SPDT)
Switching capacity:	Page 175
Switching capacity / ATEX Exmb:	Page 175
Maximal number of contacts:	1 piece (optional 2 pieces)

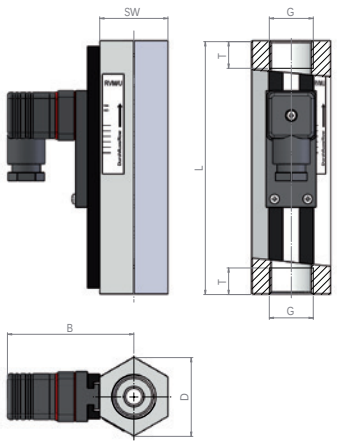

Type		Max. Design pressure	Pressure drop	G	SW	D	D1	B	T	L	Weight	ATEX Approvals
	l/min	bar	bar	mm	mm	mm	mm	mm	mm	mm	g	
RVMUM/120	0,1 - 120	250	0,02 - 2	1"	41	47	-	72	20	130	1000	Yes
Please note: Switch point (... l/min.) Please specify when ordering!												
Lowest switch point: 0,1 l/min												
Highest switch point: 30 l/min												

The flow controller are based on a modular design and can be conditionally arranged individually.
Type key page 154 - 155

Heinrich Kübler AG
Ruessenstrasse 4 | CH-6340 Baar | Phone +41 (0)41 766 62 62 | Fax +41 (0)41 766 62 63 | E-Mail info@kubler.ch | Internet www.kubler.ch

Type **DUG..** **for water independent of position**

Material quality:	Brass nickel plated Stainless steel 1.4571
Electrical connection / Ingress protection class:	Connector DIN 43650 / IP 65 ATEX - 2 m PVC connection cable / IP 67
Process connection:	Female thread G
Display:	Sight glass Duran® 50
Design pressure:	0 bar ... see table
Design temperature:	-20°C ... 100°C (optional 160°C)
Viscosity range:	-
Accuracy:	±5 % of full scale
Gasket:	Brass - NBR (optional FKM, EPDM) Stainless steel - FKM (optional NBR, EPDM)
Mounting position:	Independent of position
Approvals:	ATEX II 2 G Ex mb II T6 - T5 ATEX II 2 D Ex tD A21 IP67 T80°C - T100°C EAC TR CU 004/2011 & 020/2011

Flow switch function

Function:	Normally open (NO)
Switching capacity:	Page 175
Switching capacity / ATEX Exmb:	Page 175
Maximal number of contacts:	1 piece (optional 2 pieces)
	Optional
Function:	Change over (SPDT)
Switching capacity:	Page 175
Switching capacity / ATEX Exmb:	Page 175
Maximal number of contacts:	1 piece (optional 2 pieces)

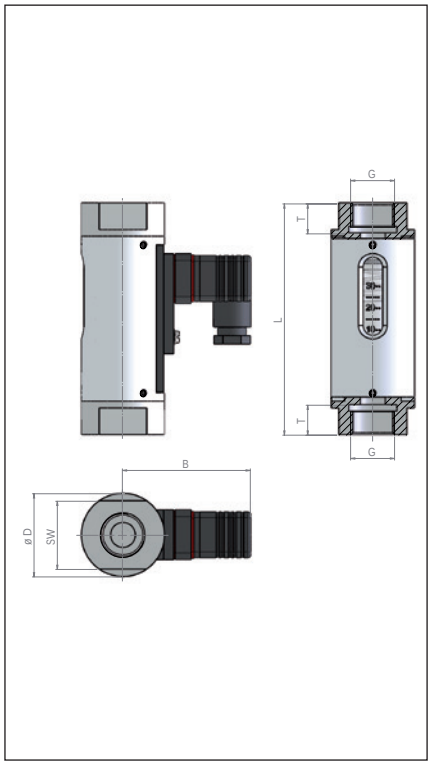

Type		Max. Design pressure	Pressure drop	G	SW	D	D1	B	T	L	Weight	ATEX Approvals
	l/min	bar	bar	mm	mm	mm	mm	mm	mm	mm	g	
DUG/4	0,2 - 4	10	0,02 - 0,8	1/4“	32	43	-	73	14	132	625	Yes
DUG/6	0,5 - 6			3/8“					14	132		
DUG/8	0,5 - 8			1/2“					15	135		
DUG/14	0,5 - 14											
DUG/22	2 - 22	10	0,02 - 0,8	1/2“	32	43	-	73	15	135	650	
DUG/28	1 - 28											
DUG/45	1 - 45	10	0,02 - 0,8	3/4“	32	43	-	73	15	135	850	
DUG/80	2 - 80	10	0,02 - 0,8	3/4“	41	50	-	76	18	164	1000	
DUG/90	6 - 90			1“					19	184		
DUG/110	6 - 110	10	0,02 - 0,8	1“	41	50	-	76	19	184	1000	
DUG/150	15 - 150	10	0,02 - 0,8	1 1/4“	50	55	-	79	21	216	1300	
DUG/220	30 - 220	10	0,02 - 0,8	1 1/4“	55	60	-	81	21	210	1700	
DUG/250	35 - 250	10	0,02 - 0,8	1 1/4“	50	55	-	79	21	222	1400	

The flow controller are based on a modular design and can be conditionally arranged individually.
Type key page 154 - 155

Type **DUM..** **for water independent of position**

Material quality:	Brass nickel plated Stainless steel 1.4571
Electrical connection / Ingress protection class:	Connector DIN 43650 / IP 65 ATEX - 2 m PVC connection cable / IP 67
Process connection:	Female thread G
Display:	-
Design pressure:	0 bar ... see table
Design temperature:	-20°C ... 100°C (optional 160°C)
Viscosity range:	-
Accuracy:	±5 % of full scale
Gasket:	Brass - NBR (optional FKM, EPDM) Stainless steel - FKM (optional NBR, EPDM)
Mounting position:	Independent of position
Approvals:	ATEX II 2 G Ex mb II T6 - T5 ATEX II 2 D Ex tD A21 IP67 T80°C - T100°C EAC TR CU 004/2011 & 020/2011

Flow switch function

Function:	Normally open (NO)
Switching capacity:	Page 175
Switching capacity / ATEX Exmb:	Page 175
Maximal number of contacts:	1 piece (optional 2 pieces)
	Optional
Function:	Change over (SPDT)
Switching capacity:	Page 175
Switching capacity / ATEX Exmb:	Page 175
Maximal number of contacts:	1 piece (optional 2 pieces)

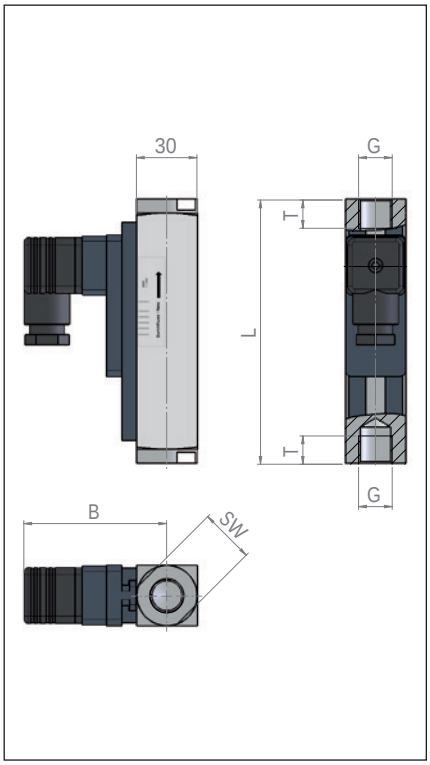

Type		Max. Design pressure	Pressure drop	G	SW	D	D1	B	T	L	Weight	ATEX Approvals
	l/min	bar	bar	mm	mm	mm	mm	mm	mm	mm	g	
DUM/4	0,2 - 4	200	0,02 - 0,8	1/4“ 3/8“ 1/2“	27	30	-	71	14	131	850	Yes
DUM/5	0,6 - 5											
DUM/8	0,5 - 8											
DUM/14	1 - 14											
DUM/28	1 - 28											
DUM/40	2 - 40	200	0,02 - 0,8	1/2“ 3/4“	27 32	30 35	-	71	14 16	146 174	900	
DUM/55	4 - 55											
DUM/70	1 - 70	200	0,02 - 0,8	3/4“ 1“	34 40	40	-	76	18 19	152 156	1400 1100	
DUM/90	8 - 90											
DUM/110	5 - 110											
DUM/150	10 -150	200	0,02 - 0,8	1 1/4“	50	50	-	76	21	200	2750	
DUM/220	35 - 220	200	0,02 - 0,8	1 1/4“	50	50	-	81	21	200	3000	
DUM/250	35 - 250	200	0,02 - 0,8	1 1/2“	60	60	-	82	24	200	3800	

The flow controller are based on a modular design and can be conditionally arranged individually.
Type key page 154 - 155

Heinrich Kübler AG
Ruessenstrasse 4 | CH-6340 Baar | Phone +41 (0)41 766 62 62 | Fax +41 (0)41 766 62 63 | E-Mail info@kubler.ch | Internet www.kubler.ch

Type **DUMA..** **for water independent of position**

Material quality:	Brass nickel plated Stainless steel 1.4571
Electrical connection / Ingress protection class:	Connector DIN 43650 / IP 65 ATEX - 2 m PVC connection cable / IP 67
Process connection:	Female thread G
Display:	-
Design pressure:	0 bar ... see table
Design temperature:	-20°C ... 100°C (optional 160°C)
Viscosity range:	-
Accuracy:	±5 % of full scale
Gasket:	Brass - NBR (optional FKM, EPDM) Stainless steel - FKM (optional NBR, EPDM)
Mounting position:	Independent of position
Approvals:	ATEX II 2 G Ex mb II T6 - T5 ATEX II 2 D Ex tD A21 IP67 T80°C - T100°C EAC TR CU 004/2011 & 020/2011

Flow switch function

Function:	Normally open (NO)
Switching capacity:	Page 175
Switching capacity / ATEX Exmb:	Page 175
Maximal number of contacts:	1 piece (optional 2 pieces)
	Optional
Function:	Change over (SPDT)
Switching capacity:	Page 175
Switching capacity / ATEX Exmb:	Page 175
Maximal number of contacts:	1 piece (optional 2 pieces)

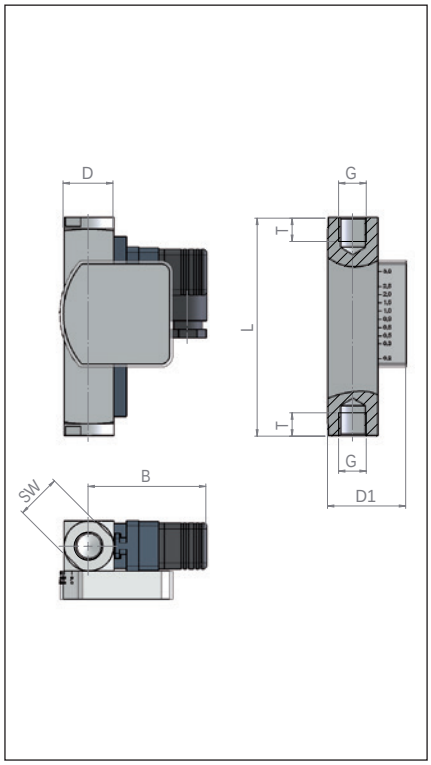

Type		Max. Design pressure	Pressure drop	G	SW	D	D1	B	T	L	Weight	ATEX Approvals
	l/min	bar	bar	mm	mm	mm	mm	mm	mm	mm	g	
DUMA/4	0,2 - 4	200	0,02 - 0,8	1/4“ 3/8“ 1/2“	27	30	47	71	14	131	900	Yes
DUMA/5	0,6 - 5											
DUMA/8	0,5 - 8											
DUMA/14	1 - 14											
DUMA/28	1 - 28											
DUMA/40	2 - 40	200	0,02 - 0,8	1/2“ 3/4“	27 32	30 35	47	71	14 16	146 174	950	
DUMA/55	4 - 55											
DUMA/70	1 - 70	200	0,02 - 0,8	3/4“ 1“	34 40	40	57	76	18 19	152 156	1450 1150	
DUMA/90	8 - 90											
DUMA/110	5 - 110											
DUMA/150	10 -150	200	0,02 - 0,8	1 1/4“	50	50	57	76	21	200	2800	
DUMA/220	35 - 220	200	0,02 - 0,8	1 1/4“	50	50	67	81	21	200	3050	
DUMA/250	35 - 250	200	0,02 - 0,8	1 1/2“	60	60	77	82	24	200	3850	

The flow controller are based on a modular design and can be conditionally arranged individually.
Type key page 154 - 155

Type **DWG..** **for water dependent of position**

Material quality:	Brass nickel plated Stainless steel 1.4571
Electrical connection / Ingress protection class:	Connector DIN 43650 / IP 65 ATEX - 2 m PVC connection cable / IP 67
Process connection:	Female thread G
Display:	Sight glass Duran® 50
Design pressure:	0 bar ... see table
Design temperature:	-20°C ... 100°C (optional 160°C)
Viscosity range:	-
Accuracy:	±5 % of full scale
Gasket:	Brass - NBR (optional FKM, EPDM) Stainless steel - FKM (optional NBR, EPDM)
Mounting position / Flow direction:	Vertical / Bottom-up
Approvals:	ATEX II 2 G Ex mb II T6 - T5 ATEX II 2 D Ex tD A21 IP67 T80°C - T100°C EAC TR CU 004/2011 & 020/2011

Flow switch function

Function:	Normally open (NO)
Switching capacity:	Page 175
Switching capacity / ATEX Exmb:	Page 175
Maximal number of contacts:	1 piece (optional 2 pieces)
	Optional
Function:	Change over (SPDT)
Switching capacity:	Page 175
Switching capacity / ATEX Exmb:	Page 175
Maximal number of contacts:	1 piece (optional 2 pieces)

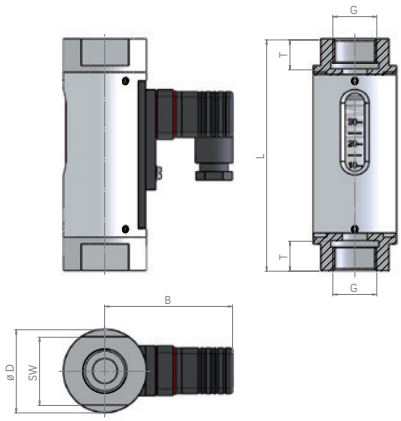

Type		Max. Design pressure	Pressure drop	G	SW	D	D1	B	T	L	Weight	ATEX Approvals
	l/min	bar	bar	mm	mm	mm	mm	mm	mm	mm	g	
DWG/1,5	0,1 - 1,5	10	0,01 - 0,2	1/4“ 3/8“ 1/2“	32	43	-	73	14 14 15	132 132 135	625	Yes
DWG/3	0,2 - 3											
DWG/8	0,3 - 8											
DWG/12	1 - 12											
DWG/18	2 - 18	10	0,01 - 0,2	1/2“ 3/4“	32	43	-	73	15 16	163 167	650	
DWG/35	3 - 35	10	0,01 - 0,2	3/4“ 1“	41	50	-	76	18 19	164 184	850 1000	
DWG/50	4 - 50											

The flow controller are based on a modular design and can be conditionally arranged individually.
Type key page 154 - 155

Heinrich Kübler AG
Ruessenstrasse 4 | CH-6340 Baar | Phone +41 (0)41 766 62 62 | Fax +41 (0)41 766 62 63 | E-Mail info@kubler.ch | Internet www.kubler.ch

Type **DWM..** **for water dependent of position**

Material quality:	Brass nickel plated Stainless steel 1.4571
Electrical connection / Ingress protection class:	Connector DIN 43650 / IP 65 ATEX - 2 m PVC connection cable / IP 67
Process connection:	Female thread G
Display:	-
Design pressure:	0 bar ... see table
Design temperature:	-20°C ... 100°C (optional 160°C)
Viscosity range:	-
Accuracy:	±5 % of full scale
Gasket:	Brass - NBR (optional FKM, EPDM) Stainless steel - FKM (optional NBR, EPDM)
Mounting position / Flow direction:	Vertical / Bottom-up
Approvals:	ATEX II 2 G Ex mb II T6 - T5 ATEX II 2 D Ex tD A21 IP67 T80°C - T100°C EAC TR CU 004/2011 & 020/2011

Flow switch function

Function:	Normally open (NO)
Switching capacity:	Page 175
Switching capacity / ATEX Exmb:	Page 175
Maximal number of contacts:	1 piece (optional 2 pieces)
	Optional
Function:	Change over (SPDT)
Switching capacity:	Page 175
Switching capacity / ATEX Exmb:	Page 175
Maximal number of contacts:	1 piece (optional 2 pieces)

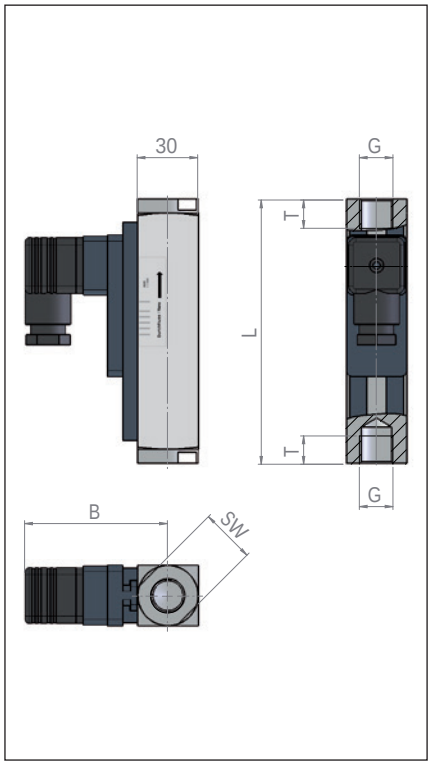

Type		Max. Design pressure	Pressure drop	G	SW	D	D1	B	T	L	Weight	ATEX Approvals
	l/min	bar	bar	mm	mm	mm	mm	mm	mm	mm	g	
DWM/1,5	0,1 - 1,5	200	0,02 - 0,2	1/4“	27	30	-	71	14	131	800	Yes
DWM/3	0,2 - 3			3/8“					19			
DWM/8	0,3 - 8			1/2“					19			
DWM/12	1 - 12											
DWM/18	2 - 18	200	0,02 - 0,2	1/2“ 3/4“	27 32	30 35	-	71	19 17	146 174	800 960	
DWM/35	3 - 35	200	0,02 - 0,2	3/4“	34	40	-	76	18	152	1450	
DWM/50	4 - 50			1“	40				19	156		

The flow controller are based on a modular design and can be conditionally arranged individually.
Type key page 154 - 155

Type **DWMA..** **for water dependent of position**

Material quality:	Brass nickel plated Stainless steel 1.4571
Electrical connection / Ingress protection class:	Connector DIN 43650 / IP 65 ATEX - 2 m PVC connection cable / IP 67
Process connection:	Female thread G
Display:	-
Design pressure:	0 bar ... see table
Design temperature:	-20°C ... 100°C (optional 160°C)
Viscosity range:	-
Accuracy:	±5 % of full scale
Gasket:	Brass - NBR (optional FKM, EPDM) Stainless steel - FKM (optional NBR, EPDM)
Mounting position / Flow direction:	Vertical / Bottom-up
Approvals:	ATEX II 2 G Ex mb II T6 - T5 ATEX II 2 D Ex tD A21 IP67 T80°C - T100°C EAC TR CU 004/2011 & 020/2011

Flow switch function

Function:	Normally open (NO)
Switching capacity:	Page 175
Switching capacity / ATEX Exmb:	Page 175
Maximal number of contacts:	1 piece (optional 2 pieces)
	Optional
Function:	Change over (SPDT)
Switching capacity:	Page 175
Switching capacity / ATEX Exmb:	Page 175
Maximal number of contacts:	1 piece (optional 2 pieces)

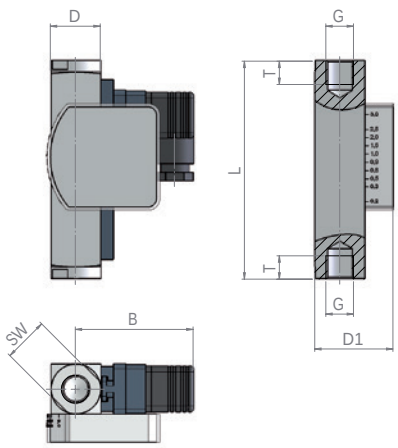

Type		Max. Design pressure	Pressure drop	G	SW	D	D1	B	T	L	Weight	ATEX Approvals
	l/min	bar	bar	mm	mm	mm	mm	mm	mm	mm	g	
DWMA/1,5	0,1 - 1,5	200	0,02 - 0,2	1/4“ 3/8“ 1/2“	27	30	47	71	14 19 19	131	850	Yes
DWMA/3	0,2 - 3											
DWMA/8	0,3 - 8											
DWMA/12	1 - 12											
DWMA/18	2 - 18	200	0,02 - 0,2	1/2“ 3/4“	27 32	30 35	47	71	19 17	146 174	850 1010	
DWMA/35	3 - 35	200	0,02 - 0,2	3/4“ 1“	34 40	40	57	76	18 19	152 156	1500	
DWMA/50	4 - 50											

The flow controller are based on a modular design and can be conditionally arranged individually.
Type key page 154 - 155

Heinrich Kübler AG
Ruessenstrasse 4 | CH-6340 Baar | Phone +41 (0)41 766 62 62 | Fax +41 (0)41 766 62 63 | E-Mail info@kubler.ch | Internet www.kubler.ch

Type **RVOUL..** **for air independent of position**

Material quality:	Brass nickel plated Stainless steel 1.4571
Electrical connection / Ingress protection class:	Connector DIN 43650 / IP 65 ATEX - 2 m PVC connection cable / IP 67
Process connection:	Female thread G
Display:	Sight glass Duran® 50
Design pressure:	0 bar ... see table
Design temperature:	-20°C ... 100°C (optional 160°C)
Viscosity range:	-
Accuracy:	±10 % of full scale
Gasket:	Brass - NBR (optional FKM, EPDM) Stainless steel - FKM (optional NBR, EPDM)
Mounting position:	Independent of position
Approvals:	ATEX II 2 G Ex mb II T6 - T5 ATEX II 2 D Ex tD A21 IP67 T80°C - T100°C EAC TR CU 004/2011 & 020/2011

Flow switch function

Function:	Normally open (NO)
Switching capacity:	Page 175
Switching capacity / ATEX Exmb:	Page 175
Maximal number of contacts:	1 piece (optional 2 pieces)
	Optional
Function:	Change over (SPDT)
Switching capacity:	Page 175
Switching capacity / ATEX Exmb:	Page 175
Maximal number of contacts:	1 piece (optional 2 pieces)

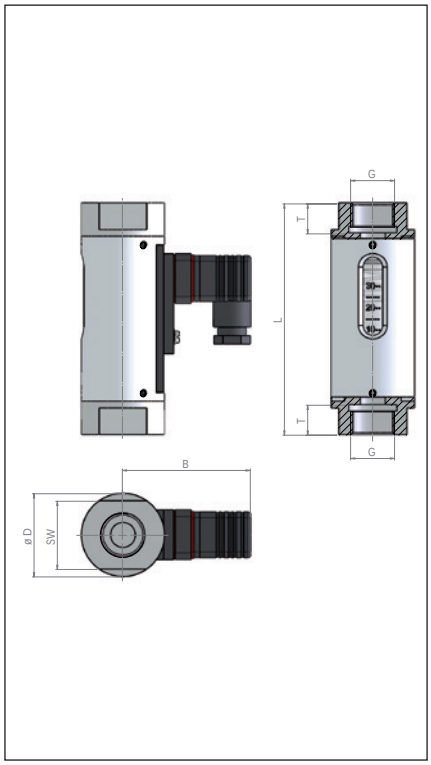

Type		Max. Design pressure	Pressure drop	G	SW	D	D1	B	T	L	Weight	ATEX Approvals
	Nl/min	bar	bar	mm	mm	mm	mm	mm	mm	mm	g	
RVOUL4/0001	0,2 - 1,3	16	0,02 ... 0,2	1/4"	17	20	-	49	10	90	140	No
RVOUL4/0002	0,5 - 2											
RVOUL4/0003	0,8 - 3											
RVOUL4/0005	1,5 - 5											
RVOUL4/0008	2 - 8											
RVOUL4/0012	3 - 12											
RVOUL4/0014	3,5 - 14											
RVOUL4/0020	5,5 - 20											
RVOUL4/0024	7 - 24											
RVOUL4/0035	10 - 35											
RVOUL4/0042	10 - 42											
RVOUL2/0012	3 - 12	16	0,02 - 0,3	1/2"	27	32	-	53	14	114	300	No
RVOUL2/0030	7 - 30											
RVOUL2/0040	12 - 40											
RVOUL2/0125	28 - 125											
RVOUL2/0200	50 - 200											
RVOU2/15L	100 - 420											
RVOU2/20L	120 - 480											
RVOUL1/0080	22,5 - 80	10	0,02 - 0,4	3/4" 1"	41	50	-	77	18	139 158	800 900	Yes
RVOUL1/0130	50 - 130											
RVOUL1/0420	130 - 420											
RVOUL1/0625	200 - 625											

The flow controller are based on a modular design and can be conditionally arranged individually.
Type key page 154 - 155

Type **RVMUL..** **for air independent of position**

Material quality:	Brass nickel plated Stainless steel 1.4571
Electrical connection / Ingress protection class:	Connector DIN 43650 / IP 65 ATEX - 2 m PVC connection cable / IP 67
Process connection:	Female thread G
Display:	-
Design pressure:	0 bar ... see table
Design temperature:	-20°C ... 120°C (optional 160°C)
Viscosity range:	-
Accuracy:	±10 % of full scale
Gasket:	Brass - NBR (optional FKM, EPDM) Stainless steel - FKM (optional NBR, EPDM)
Mounting position:	Independent of position
Approvals:	ATEX II 2 G Ex mb II T6 - T5 ATEX II 2 D Ex tD A21 IP67 T80°C - T100°C EAC TR CU 004/2011 & 020/2011

Flow switch function

Function:	Normally open (NO)
Switching capacity:	Page 175
Switching capacity / ATEX Exmb:	Page 175
Maximal number of contacts:	1 piece (optional 2 pieces)
	Optional
Function:	Change over (SPDT)
Switching capacity:	Page 175
Switching capacity / ATEX Exmb:	Page 175
Maximal number of contacts:	1 piece (optional 2 pieces)

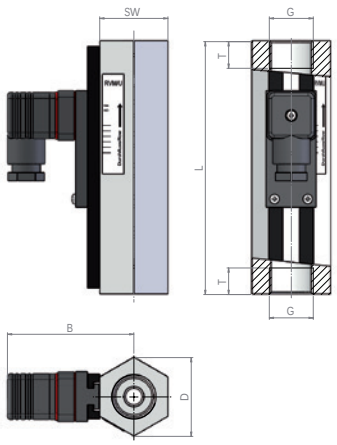

Type		Max. Design pressure	Pressure drop	G	SW	D	D1	B	T	L	Weight	ATEX Approvals
	Nl/min	bar	bar	mm	mm	mm	mm	mm	mm	mm	g	
RVMUL4/0002	0,6 - 2,2											
RVMUL4/0006	1,7 - 6											
RVMUL4/0008	2,5 - 8											
RVMUL4/0012	3 - 12											
RVMU4/06L	3 - 22	300	0,02 ... 0,2	1/4"	17	17	-	47	10	65	140	No
RVMUL4/0024	7 - 24											
RVMUL4/0034	12 - 34											
RVMU4/2L	16 - 56											
RVMU4/3L	20 - 80											
RVMUL2/0010	2,5 - 10											
RVMUL2/0020	5,5 - 20											
RVMUL2/0030	8 - 30											
RVMUL2/0035	10 - 35											
RVMU2/3L	24 - 90	300	0,02 - 0,3	1/2"	27	31	-	52	14	90	350	Yes
RVMUL2/0220	55 - 220											
RVMUL2/0240	65 - 240											
RVMUL2/0300	80 - 300											
RVMUL2/0525	140 - 525											
RVMUL1/0180	60 - 180											
RVMUL1/0300	100 - 30	250	0,02 - 0,4	3/4" 1"	41	47	-	76	21 17	152 130	1200 1050	Yes
RVMUL1/0650	200 - 65											

The flow controller are based on a modular design and can be conditionally arranged individually.
Type key page 154 - 155

Heinrich Kübler AG
Ruessenstrasse 4 | CH-6340 Baar | Phone +41 (0)41 766 62 62 | Fax +41 (0)41 766 62 63 | E-Mail info@kubler.ch | Internet www.kubler.ch

Type **DWGL..** **for air dependent of position**

Material quality:	Brass nickel plated Stainless steel 1.4571
Electrical connection / Ingress protection class:	Connector DIN 43650 / IP 65 ATEX - 2 m PVC connection cable / IP 67
Process connection:	Female thread G
Display:	Sight glass Duran® 50
Design pressure:	0 bar ... see table
Design temperature:	-20°C ... 80°C
Viscosity range:	-
Accuracy:	±10 % of full scale
Gasket:	Brass - NBR (optional FKM, EPDM) Stainless steel - FKM (optional NBR, EPDM)
Mounting position / Flow direction:	Vertical / Bottom-up
Approvals:	ATEX II 2 G Ex mb II T6 - T5 ATEX II 2 D Ex tD A21 IP67 T80°C - T100°C EAC TR CU 004/2011 & 020/2011

Flow switch function

Function:	Normally open (NO)
Switching capacity:	Page 175
Switching capacity / ATEX Exmb:	Page 175
Maximal number of contacts:	1 piece (optional 2 pieces)
	Optional
Function:	Change over (SPDT)
Switching capacity:	Page 175
Switching capacity / ATEX Exmb:	Page 175
Maximal number of contacts:	1 piece (optional 2 pieces)

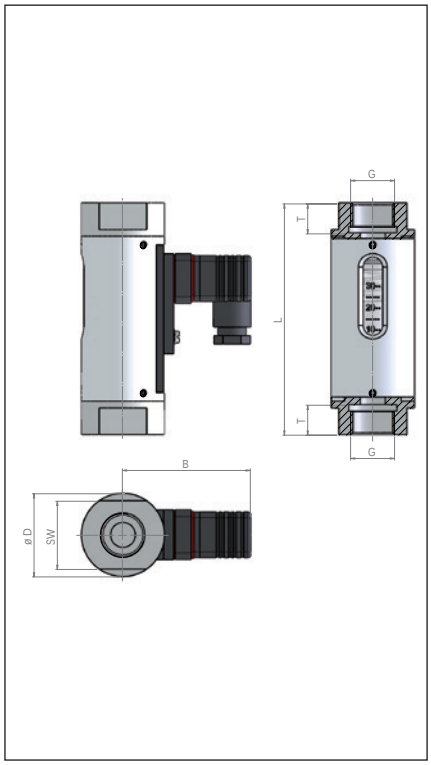

Type		Max. Design pressure	Pressure drop	G	SW	D	D1	B	T	L	Weight	ATEX Approvals
	Nl/min	bar	bar	mm	mm	mm	mm	mm	mm	mm	g	
DWGL/1,5	3 - 30	10	0,01 - 0,2	1/4“ 3/8“ 1/2“	32	43	-	73	14 14 15	132 132 135	625	Yes
DWGL/3	6 - 60											
DWGL/8	6 - 160											
DWGL/12	20 - 220											
DWGL/18	40 - 360	10	0,01 - 0,2	1/2“ 3/4“	32	43	-	73	15 16	163 167	650	
DWGL/35	60 - 700	10	0,01 - 0,2	3/4“ 1“	41	50	-	76	18 19	164 184	850 1000	
DWGL/50	60 - 825											
DWGL/100	200 - 1600	10	0,01 - 0,2	1“	41	50	-	76	19	204	1100	

The flow controller are based on a modular design and can be conditionally arranged individually.
Type key page 154 - 155

Type **DWML..** **for air dependent of position**

Material quality:	Brass nickel plated Stainless steel 1.4571
Electrical connection / Ingress protection class:	Connector DIN 43650 / IP 65 ATEX - 2 m PVC connection cable / IP 67
Process connection:	Female thread G
Display:	-
Design pressure:	0 bar ... see table
Design temperature:	-20°C ... 80°C
Viscosity range:	-
Accuracy:	±10 % of full scale
Gasket:	Brass - NBR (optional FKM, EPDM) Stainless steel - FKM (optional NBR, EPDM)
Mounting position / Flow direction:	Vertical / Bottom-up
Approvals:	ATEX II 2 G Ex mb II T6 - T5 ATEX II 2 D Ex tD A21 IP67 T80°C - T100°C EAC TR CU 004/2011 & 020/2011

Flow switch function

Function:	Normally open (NO)
Switching capacity:	Page 175
Switching capacity / ATEX Exmb:	Page 175
Maximal number of contacts:	1 piece (optional 2 pieces)
	Optional
Function:	Change over (SPDT)
Switching capacity:	Page 175
Switching capacity / ATEX Exmb:	Page 175
Maximal number of contacts:	1 piece (optional 2 pieces)

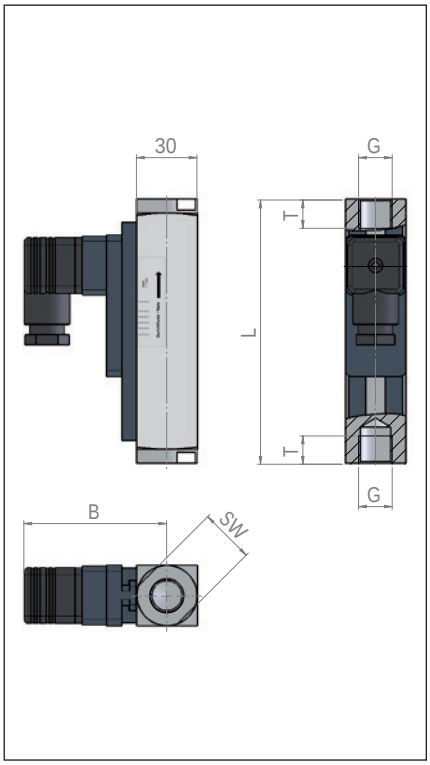

Type		Max. Design pressure	Pressure drop	G	SW	D	D1	B	T	L	Weight	ATEX Approvals
	Nl/min	bar	bar	mm	mm	mm	mm	mm	mm	mm	g	
DWML/1,5	1 - 28	200	0,02 - 0,4	1/4“ 3/8“ 1/2“	27	30	-	71	14 19 19	131	800	Yes
DWML/3	4 - 60											
DWML/8	6 - 160											
DWML/12	20 - 240											
DWML/18	40 - 360	200	0,02 - 0,4	1/2“ 3/4“	27 32	30 35	-	71	19 17	146 174	850 960	
DWML/50	60 - 700	200	0,02 - 0,4	3/4“ 1“	34 40	40	-	76	18 19	152 156	1350 1050	
DWML/100	200 - 1450	200	0,02 - 0,4	1“	50	50	-	81	20	200	2750	

The flow controller are based on a modular design and can be conditionally arranged individually.
Type key page 154 - 155

Heinrich Kübler AG
Ruessenstrasse 4 | CH-6340 Baar | Phone +41 (0)41 766 62 62 | Fax +41 (0)41 766 62 63 | E-Mail info@kubler.ch | Internet www.kubler.ch

Type **DWMAL..** **for air dependent of position**

Material quality:	Brass nickel plated Stainless steel 1.4571
Electrical connection / Ingress protection class:	Connector DIN 43650 / IP 65 ATEX - 2 m PVC connection cable / IP 67
Process connection:	Female thread G
Display:	-
Design pressure:	0 bar ... see table
Design temperature:	-20°C ... 80°C
Viscosity range:	-
Accuracy:	±10 % of full scale
Gasket:	Brass - NBR (optional FKM, EPDM) Stainless steel - FKM (optional NBR, EPDM)
Mounting position / Flow direction:	Vertical / Bottom-up
Approvals:	ATEX II 2 G Ex mb II T6 - T5 ATEX II 2 D Ex tD A21 IP67 T80°C - T100°C EAC TR CU 004/2011 & 020/2011

Flow switch function

Function:	Normally open (NO)
Switching capacity:	Page 175
Switching capacity / ATEX Exmb:	Page 175
Maximal number of contacts:	1 piece (optional 2 pieces)
	Optional
Function:	Change over (SPDT)
Switching capacity:	Page 175
Switching capacity / ATEX Exmb:	Page 175
Maximal number of contacts:	1 piece (optional 2 pieces)

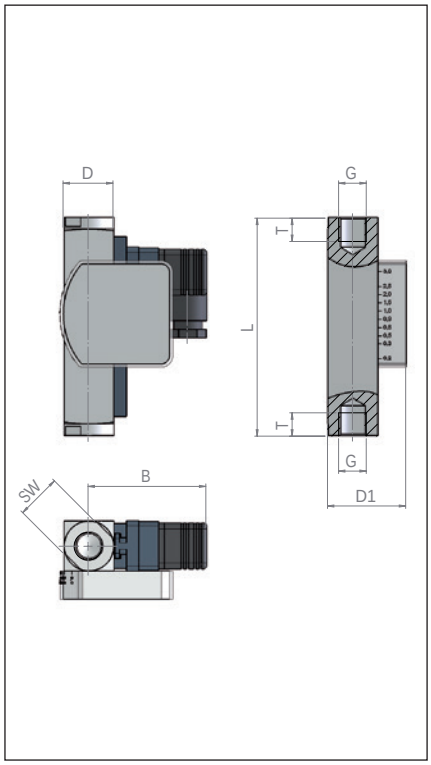

Type		Max. Design pressure	Pressure drop	G	SW	D	D1	B	T	L	Weight	ATEX Approvals
	Nl/min	bar	bar	mm	mm	mm	mm	mm	mm	mm	g	
DWMAL/1,5	1 - 28	200	0,02 - 0,4	1/4“ 3/8“ 1/2“	27	30	47	71	14 19 19	131	850	Yes
DWMAL/3	4 - 60											
DWMAL/8	6 - 160											
DWMAL/12	20 - 240											
DWMAL/18	40 - 360	200	0,02 - 0,4	1/2“ 3/4“	27 32	30 35	47	71	19 17	146 174	900 1010	
DWMAL/50	60 - 700	200	0,02 - 0,4	3/4“ 1“	34 40	40	57	76	18 19	152 156	1400 1100	
DWMAL/100	200 - 1450	200	0,02 - 0,4	1“	50	50	67	81	20	200	2800	

The flow controller are based on a modular design and can be conditionally arranged individually.
Type key page 154 - 155

Type **DKG..** **for oil independent of position**

Material quality:	Brass nickel plated
	Stainless steel 1.4571
Electrical connection / Ingress protection class:	Connector DIN 43650 / IP 65
	ATEX - 2 m PVC connection cable / IP 67
Process connection:	Female thread G
Display:	Sight glass Duran® 50
Design pressure:	0 bar ... see table
Design temperature:	-20°C ... 120°C (optional 160°C)
Viscosity range:	30 cSt ... 600 cSt
Accuracy:	±10 % of full scale
Gasket:	Brass - FKM
	Stainless steel - FKM
Mounting position:	Independent of position
Approvals:	ATEX II 2 G Ex mb II T6 - T5
	ATEX II 2 D Ex tD A21 IP67 T80°C - T100°C
	EAC TR CU 004/2011 & 020/2011

Flow switch function

Function:	Normally open (NO)
Switching capacity:	Page 175
Switching capacity / ATEX Exmb:	Page 175
Maximal number of contacts:	1 piece (optional 2 pieces)
	Optional
Function:	Change over (SPDT)
Switching capacity:	Page 175
Switching capacity / ATEX Exmb:	Page 175
Maximal number of contacts:	1 piece (optional 2 pieces)

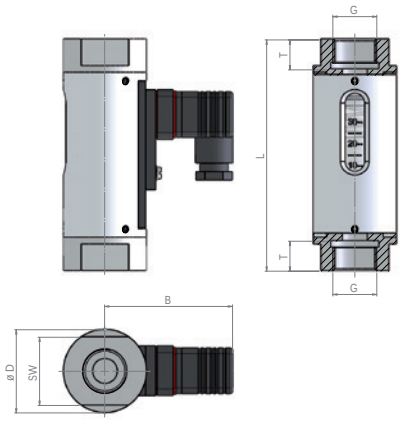

Type		Max. Design pressure	Pressure drop	G	SW	D	D1	B	T	L	Weight	ATEX Approvals
	l/min	bar	bar	mm	mm	mm	mm	mm	mm	mm	g	
DKG2/2	0,5 - 1,7	16	0,02 - 0,2	1/2“	27	32	-	54	14	114	300	No
DKG2/3	0,8 - 2,5											
DKG2/4	1,3 - 4,0											
DKG2/8	2,5 - 8,0											
DKG1/1	0,1 - 0,8	10	0,02 - 0,4	1/4“ 1/2“ 3/4“ 1“	41	50	-	74	10 14 15 17	144,5 144,5 138,5 158,5	850	Yes
DKG1/2	0,5 - 1,5											
DKG1/4	1 - 4											
DKG1/8	2 - 8	10	0,02 - 0,4	1/2“ 3/4“ 1“	41	50	-	74	14 15 17	144,5 138,5 158,5	850	Yes
DKG1/10	3 - 10											
DKG1/15	5 - 15											
DKG1/24	8 - 24											
DKG1/30	10 - 30	10	0,02 - 0,4	3/4“ 1“	41	50	-	74	15 17	138,5 158,5	850	Yes
DKG1/45	15 - 45											
DKG1/60	20 - 60											
DKG1/90	30 - 90											

The flow controller are based on a modular design and can be conditionally arranged individually.
Type key page 154 - 155

Heinrich Kübler AG
Ruessenstrasse 4 | CH-6340 Baar | Phone +41 (0)41 766 62 62 | Fax +41 (0)41 766 62 63 | E-Mail info@kubler.ch | Internet www.kubler.ch

Type **DKM..** **for oil independent of position**

Material quality:	Brass nickel plated Stainless steel 1.4571
Electrical connection / Ingress protection class:	Connector DIN 43650 / IP 65 ATEX - 2 m PVC connection cable / IP 67
Process connection:	Female thread G
Display:	-
Design pressure:	0 bar ... see table
Design temperature:	-20°C ... 120°C (optional 160°C)
Viscosity range:	30 cSt ... 600 cSt
Accuracy:	±10 % of full scale
Gasket:	Brass - FKM Stainless steel - FKM
Mounting position:	Independent of position
Approvals:	ATEX II 2 G Ex mb II T6 - T5 ATEX II 2 D Ex tD A21 IP67 T80°C - T100°C EAC TR CU 004/2011 & 020/2011

Flow switch function

Function:	Normally open (NO)
Switching capacity:	Page 175
Switching capacity / ATEX Exmb:	Page 175
Maximal number of contacts:	1 piece (optional 2 pieces)
	Optional
Function:	Change over (SPDT)
Switching capacity:	Page 175
Switching capacity / ATEX Exmb:	Page 175
Maximal number of contacts:	1 piece (optional 2 pieces)

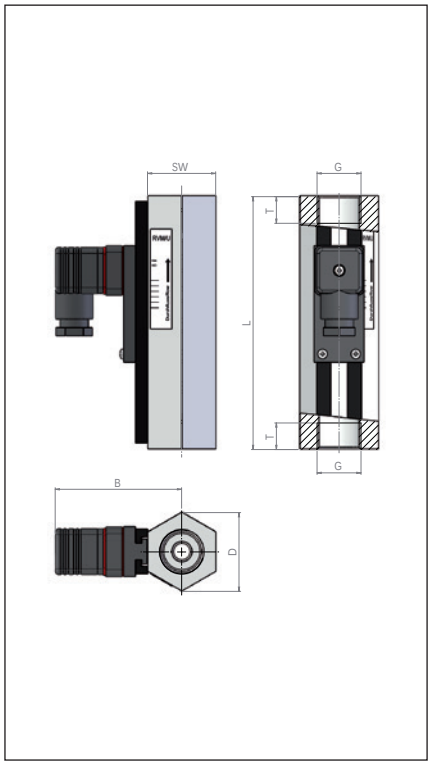

Type		Max. Design pressure	Pressure drop	G	SW	D	D1	B	T	L	Weight	ATEX Approvals
	l/min	bar	bar	mm	mm	mm	mm	mm	mm	mm	g	
DKM2/2	0,5 - 1,6	300	0,02 - 0,2	1/4“ 3/8“ 1/2“	24 24 27	31	-	52	10 11 14	90	400 450 350	Yes
DKM2/3	0,8 - 3	300	0,02 - 0,2	1/2“	27	31	-	52	14	90	350	
DKM2/7	2 - 7											
DKM1/2	0,5 - 1,5	250	0,02 - 0,4	1/4“ 1/2“ 3/4“ 1“	34 34 34 40	40	-	73	10 14 15 17	152 152 152 130	1500 1425 1340 1160	
DKM1/4	1 - 4											
DKM1/8	2 - 8	250	0,02 - 0,4	1/2“ 3/4“ 1“	34 34 40	40	-	73	14 15 17	152 152 130	1425 1340 1160	
DKM1/10	3 - 10											
DKM1/15	5 - 15											
DKM1/24	8 - 24											
DKM1/30	10 - 30	250	0,02 - 0,4	3/4“ 1“	34 40	40	-	73	15 17	152 130	1340 1160	
DKM1/45	15 - 45											
DKM1/60	20 - 60											
DKM1/90	30 - 90	250	0,02 - 0,4	1“	40	40	-	73	17	130	1160	
DKM1/110	35 - 110											

The flow controller are based on a modular design and can be conditionally arranged individually.
Type key page 154 - 155

Type **DKMA..** **for oil independent of position**

Material quality:	Brass nickel plated Stainless steel 1.4571
Electrical connection / Ingress protection class:	Connector DIN 43650 / IP 65 ATEX - 2 m PVC connection cable / IP 67
Process connection:	Female thread G
Display:	-
Design pressure:	0 bar ... see table
Design temperature:	-20°C ... 120°C (optional 160°C)
Viscosity range:	30 cSt ... 600 cSt
Accuracy:	±10 % of full scale
Gasket:	Brass - FKM Stainless steel - FKM
Mounting position:	Independent of position
Approvals:	ATEX II 2 G Ex mb II T6 - T5 ATEX II 2 D Ex tD A21 IP67 T80°C - T100°C EAC TR CU 004/2011 & 020/2011

Flow switch function

Function:	Normally open (NO)
Switching capacity:	Page 175
Switching capacity / ATEX Exmb:	Page 175
Maximal number of contacts:	1 piece (optional 2 pieces)
	Optional
Function:	Change over (SPDT)
Switching capacity:	Page 175
Switching capacity / ATEX Exmb:	Page 175
Maximal number of contacts:	1 piece (optional 2 pieces)

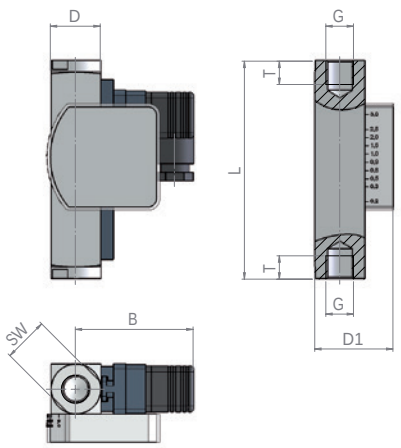

Type		Max. Design pressure	Pressure drop	G	SW	D	D1	B	T	L	Weight	ATEX Approvals
	l/min	bar	bar	mm	mm	mm	mm	mm	mm	mm	g	
DKMA1/2	0,5 - 1,5	250	0,02 - 0,4	1/4“ 1/2“ 3/4“ 1“	34 34 34 40	40	57	73	10 14 15 17	152 152 152 130	1590 1515 1430 1250	Yes
DKMA1/4	1 - 4											
DKMA1/8	2 - 8	250	0,02 - 0,4	1/2“ 3/4“ 1“	34 34 40	40	57	73	14 15 17	152 152 130	1515 1430 1250	
DKMA1/10	3 - 10											
DKMA1/15	5 - 15											
DKMA1/24	8 - 24											
DKMA1/30	10 - 30	250	0,02 - 0,4	3/4“ 1“	34 40	40	57	73	15 17	152 130	1430 1250	
DKMA1/45	15 - 45											
DKMA1/60	20 - 60											
DKMA1/90	30 - 90	250	0,02 - 0,4	1“	40	40	57	73	17	130	1250	
DKMA1/110	35 - 110											

The flow controller are based on a modular design and can be conditionally arranged individually.
Type key page 154 - 155

Heinrich Kübler AG
Ruessenstrasse 4 | CH-6340 Baar | Phone +41 (0)41 766 62 62 | Fax +41 (0)41 766 62 63 | E-Mail info@kubler.ch | Internet www.kubler.ch

Type **DKME..** **for oil independent of position**

Material quality:	Brass nickel plated
	Stainless steel 1.4571
Electrical connection / Ingress protection class:	Connector DIN 43650 / IP 65
	ATEX - 2 m PVC connection cable / IP 67
Process connection:	Female thread G
Display:	-
Design pressure:	0 bar ... see table
Design temperature:	-20°C ... 120°C (optional 160°C)
Viscosity range:	30 cSt ... 600 cSt
Accuracy:	±10 % of full scale
Gasket:	Brass - FKM
	Stainless steel - FKM
Mounting position:	Independent of position
Approvals:	ATEX II 2 G Ex mb II T6 - T5
	ATEX II 2 D Ex tD A21 IP67 T80°C - T100°C
	EAC TR CU 004/2011 & 020/2011

Flow switch function

Function:	Normally open (NO)
Switching capacity:	Page 175
Switching capacity / ATEX Exmb:	Page 175
Maximal number of contacts:	1 piece (optional 2 pieces)
	Optional
Function:	Change over (SPDT)
Switching capacity:	Page 175
Switching capacity / ATEX Exmb:	Page 175
Maximal number of contacts:	1 piece (optional 2 pieces)

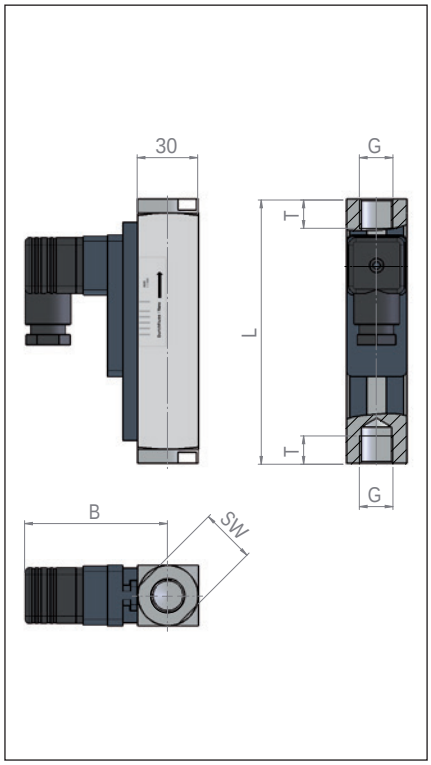

Type		Max. Design pressure	Pressure drop	G	SW	D	D1	B	T	L	Weight	ATEX Approvals
	l/min	bar	bar	mm	mm	mm	mm	mm	mm	mm	g	
DKME1/20	1 - 20	250	0,02 - 0,4	1/2“ 3/4“ 1“	34 34 40	40	-	73	14 15 17	152 152 130	1425 1340 1160	Yes
DKME1/40	4 - 40											
DKME1/50	5 - 50	250	0,02 - 0,4	3/4“ 1“	34 40	40	-	73	15 17	152 130	1340 1160	
DKME1/60	8 - 60											
DKME1/70	12 - 70	250	0,02 - 0,4	1“	40	40	-	73	17	130	1160	
DKME1/80	15 - 80											

The flow controller are based on a modular design and can be conditionally arranged individually.
Type key page 154 - 155

Type **DKMEA..** **for oil independent of position**

Material quality:	Brass nickel plated Stainless steel 1.4571
Electrical connection / Ingress protection class:	Connector DIN 43650 / IP 65 ATEX - 2 m PVC connection cable / IP 67
Process connection:	Female thread G
Display:	-
Design pressure:	0 bar ... see table
Design temperature:	-20°C ... 120°C (optional 160°C)
Viscosity range:	30 cSt ... 600 cSt
Accuracy:	±10 % of full scale
Gasket:	Brass - FKM Stainless steel - FKM
Mounting position:	Independent of position
Approvals:	ATEX II 2 G Ex mb II T6 - T5 ATEX II 2 D Ex tD A21 IP67 T80°C - T100°C EAC TR CU 004/2011 & 020/2011

Flow switch function

Function:	Normally open (NO)
Switching capacity:	Page 175
Switching capacity / ATEX Exmb:	Page 175
Maximal number of contacts:	1 piece (optional 2 pieces)
	Optional
Function:	Change over (SPDT)
Switching capacity:	Page 175
Switching capacity / ATEX Exmb:	Page 175
Maximal number of contacts:	1 piece (optional 2 pieces)

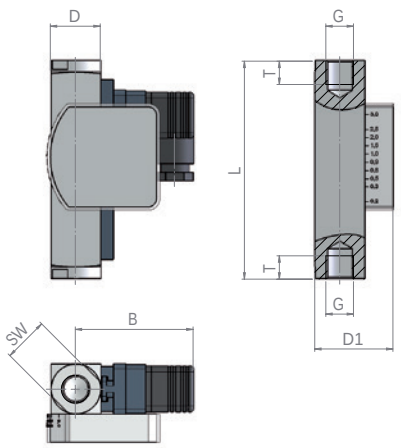

Type		Max. Design pressure	Pressure drop	G	SW	D	D1	B	T	L	Weight	ATEX Approvals
	l/min	bar	bar	mm	mm	mm	mm	mm	mm	mm	g	
DKMEA1/20	1 - 20	250	0,02 - 0,4	1/2“	34	40	57	73	14	152	1425	Yes
DKMEA1/40	4 - 40			3/4“ 1“	34 40				15 17	152 130	1340 1160	
DKMEA1/50	5 - 50	250	0,02 - 0,4	3/4“	34	40	57	73	15	152	1340	
DKMEA1/60	8 - 60			1“	40				17	130	1160	
DKMEA1/70	12 - 70	250	0,02 - 0,4	1“	40	40	57	73	17	130	1160	
DKMEA1/80	15 - 80											

The flow controller are based on a modular design and can be conditionally arranged individually.
Type key page 154 - 155

Heinrich Kübler AG
Ruessenstrasse 4 | CH-6340 Baar | Phone +41 (0)41 766 62 62 | Fax +41 (0)41 766 62 63 | E-Mail info@kubler.ch | Internet www.kubler.ch

Electrical switching capacity of the contacts

Type			ATEX Ex mb	ATEX Ex mb
	Normally open	Change over	Normally open	Change over
RVOU4/..	200 V / 1 A / 20VA	200 V / 1 A / 20 VA		
RVOU2/..	230 V / 3 A / 60 VA	230 V / 1,5 A / 50 VA		
RVOU1/..	230 V / 3 A / 100 VA	230 V / 1,5 A / 50 VA	230 V / 2 A / 60 VA	230 V / 1 A / 30 VA
RVMU4/..	200 V / 1 A / 20 VA	200 V / 1 A / 20 VA		
RVMU2/..	230 V / 3 A / 60 VA	230 V / 1,5 A / 50 VA	230 V / 2 A / 60 VA	230 V / 1 A / 30 VA
RVMU1/..	230 V / 3 A / 100 VA	230 V / 1,5 A / 50 VA	230 V / 2 A / 60 VA	230 V / 1 A / 30 VA
RVMUM/..	230 V / 3 A / 100 VA	230 V / 1,5 A / 50 VA	230 V / 2 A / 60 VA	230 V / 1 A / 30 VA
DUG/..	230 V / 3 A / 100 VA	230 V / 1,5 A / 50 VA	230 V / 2 A / 60 VA	230 V / 1 A / 30 VA
DUM/..	230 V / 3 A / 100 VA	230 V / 1,5 A / 50 VA	230 V / 2 A / 60 VA	230 V / 1 A / 30 VA
DUMA/..	230 V / 3 A / 100 VA	230 V / 1,5 A / 50 VA	230 V / 2 A / 60 VA	230 V / 1 A / 30 VA
DWG/..	230 V / 3 A / 100 VA	230 V / 1,5 A / 50 VA	230 V / 2 A / 60 VA	230 V / 1 A / 30 VA
DWM/..	230 V / 3 A / 100 VA	230 V / 1,5 A / 50 VA	230 V / 2 A / 60 VA	230 V / 1 A / 30 VA
DWMA/..	230 V / 3 A / 100 VA	230 V / 1,5 A / 50 VA	230 V / 2 A / 60 VA	230 V / 1 A / 30 VA
RVOUL4/..	200 V / 1 A / 20VA	200 V / 1 A / 20 VA		
RVOUL2/..	230 V / 3 A / 60 VA	230 V / 1,5 A / 50 VA		
RVOUL1/..	230 V / 3 A / 100 VA	230 V / 1,5 A / 50 VA	230 V / 2 A / 60 VA	230 V / 1 A / 30 VA
RVMUL4/..	200 V / 1 A / 20VA	200 V / 1 A / 20 VA		
RVMUL2/..	230 V / 3 A / 60 VA	230 V / 1,5 A / 50 VA	230 V / 2 A / 60 VA	230 V / 1 A / 30 VA
RVMUL1/..	230 V / 3 A / 100 VA	230 V / 1,5 A / 50 VA	230 V / 2 A / 60 VA	230 V / 1 A / 30 VA
DWGL/..	230 V / 3 A / 100 VA	230 V / 1,5 A / 50 VA	230 V / 2 A / 60 VA	230 V / 1 A / 30 VA
DWML/..	230 V / 3 A / 100 VA	230 V / 1,5 A / 50 VA	230 V / 2 A / 60 VA	230 V / 1 A / 30 VA
DWMAL/..	230 V / 3 A / 100 VA	230 V / 1,5 A / 50 VA	230 V / 2 A / 60 VA	230 V / 1 A / 30 VA
DKG2/..	230 V / 3 A / 100 VA	230 V / 1,5 A / 50 VA		
DKG1/..	230 V / 3 A / 100 VA	230 V / 1,5 A / 50 VA	230 V / 2 A / 60 VA	230 V / 1 A / 30 VA
DKM2/..	230 V / 3 A / 100 VA	230 V / 1,5 A / 50 VA	230 V / 2 A / 60 VA	230 V / 1 A / 30 VA
DKM1/..	230 V / 3 A / 100 VA	230 V / 1,5 A / 50 VA	230 V / 2 A / 60 VA	230 V / 1 A / 30 VA
DKMA/..	230 V / 3 A / 100 VA	230 V / 1,5 A / 50 VA	230 V / 2 A / 60 VA	230 V / 1 A / 30 VA
DKME1/..	230 V / 3 A / 100 VA	230 V / 1,5 A / 50 VA	230 V / 2 A / 60 VA	230 V / 1 A / 30 VA
DKMEA1/..	230 V / 3 A / 100 VA	230 V / 1,5 A / 50 VA	230 V / 2 A / 60 VA	230 V / 1 A / 30 VA

The flow controller are based on a modular design and can be conditionally arranged individually.
Type key page 154 - 155

Type **DP65..** **for water independent of position**

Material quality:	Steel Polyamide 11 coated
Electrical connection / Ingress protection class:	Aluminium / IP 65
Process connection:	Sandwich mounting
Display:	Analogue display
Design pressure:	0 bar ... see table
Design temperature:	-20°C ... 130°C
Viscosity range:	380 cP
Accuracy:	±2,5 % of full scale
Gasket:	-
Mounting position:	Independent of position*
Approvals:	ATEX Ex ia IIC T4 (only measuring transducer) EAC TR CU 004/2011 & 020/2011

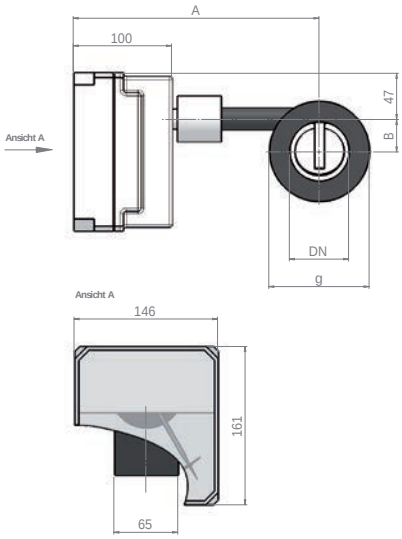

Monitoring functions

Function:	Change over (SPDT)
Switching capacity:	230 V / 1 A / 50 VA
Maximal number of contacts:	1 piece (optional 2 pieces)
Ambient temperature:	-25°C ... 70°C
	Alternative with measuring transducer
Power supply:	12 ... 24 VDC
Analogue output :	4 … 20 mA
Totalizer:	9 digits, size 4,5 mm
Ambient temperature:	-5°C ... 70°C / ATEX -5°C ... 40°C

Type		Max. Design pressure	Pressure drop	Process connection	g	B	A	Weight	ATEX Approvals
	m³/h	bar	bar		mm	mm	mm	kg	
DP65/406	0,8 - 4/6	40	low	DN 40	88	28	250	5	
DP65/408	1 - 8								
DP65/4010	2 - 10								
DP65/4016	3 - 16								
DP65/506	0,8 - 6	40	low	DN 50	102	33	250	6	
DP65/5010	2 - 10								
DP65/5016	3 - 16								
DP65/5025	3 - 25								
DP65/6510	2 - 10	40	low	DN 65	122	40	250	7	
DP65/6516	3 - 16								
DP65/6525	3 - 25								
DP65/6530	4 - 30								
DP65/8016	2 - 16	40	low	DN 80	138	50	250	8	
DP65/8025	3 - 25								
DP65/8040	5 - 40								
DP65/8060	10 - 60								
DP65/10040	5 - 40	16	low	DN 100	158	60	250	10	
DP65/10060	8 - 60								
DP65/10080	10 - 80								
DP65/10090	12 - 90								

The flow controller are based on a modular design and can be conditionally arranged individually.
Type key page 154 - 155

* By ordering please specify the mounting position (vertical or horizontal) and the flow direction.

Heinrich Kübler AG
Ruessenstrasse 4 | CH-6340 Baar | Phone +41 (0)41 766 62 62 | Fax +41 (0)41 766 62 63 | E-Mail info@kubler.ch | Internet www.kubler.ch

Type **DP65..** **for water independent of position**

Material quality:	Steel Polyamide 11 coated
Electrical connection / Ingress protection class:	Aluminium / IP 65
Process connection:	Sandwich mounting
Display:	Analogue display
Design pressure:	0 bar ... see table
Design temperature:	-20°C ... 130°C
Viscosity range:	380 cP
Accuracy:	±2,5 % of full scale
Gasket:	-
Mounting position:	Independent of position*
Approvals:	ATEX Ex ia IIC T4 (only measuring transducer) EAC TR CU 004/2011 & 020/2011

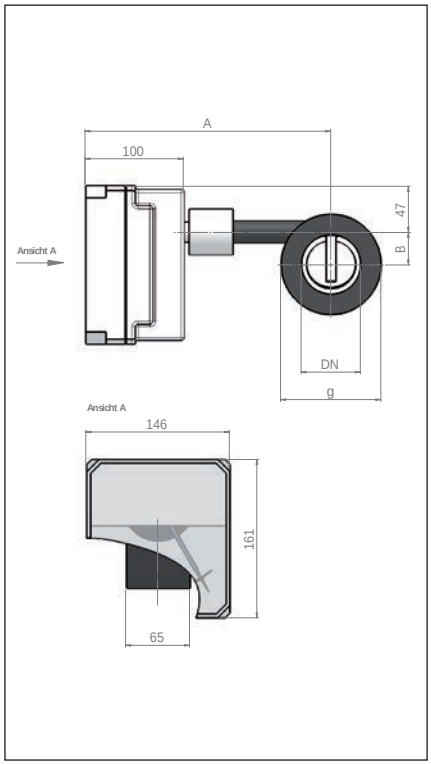

Monitoring functions

Function:	Change over (SPDT)
Switching capacity:	230 V / 1 A / 50 VA
Maximal number of contacts:	1 piece (optional 2 pieces)
Ambient temperature:	-25°C ... 70°C
	Alternative with measuring transducer
Power supply:	12 ... 24 VDC
Analogue output :	4 … 20 mA
Totalizer:	9 digits, size 4,5 mm
Ambient temperature:	-5°C ... 70°C / ATEX -5°C ... 40°C

Type		Max. Design pressure	Pressure drop	Process connection	g	B	A	Weight	ATEX Approvals
	m³/h	bar	bar		mm	mm	mm	kg	
DP65/12560	8 - 60	16	low	DN 125	188	70	280	12	
DP65/125100	15 - 100								
DP65/125120	15 - 120								
DP65/125135	20 - 135								
DP65/150100	15 - 100	16	low	DN 150	212	78	280	14	
DP65/150160	20 - 160								
DP65/150200	25 - 200								
DP65/150220	40 - 220								
DP65/200160	20 - 160	16	low	DN 200	268	90	320	20	
DP65/200250	30 - 250								
DP65/200350	40 - 350								
DP65/250200	25 - 200	10	low	DN 250	320	102	350	29	
DP65/250400	50 - 400								
DP65/250500	60 - 500								
DP65/250600	80 - 600								
DP65/300250	30 - 250	10	low	DN 300	370	115	370	35	
DP65/300400	50 - 400								
DP65/300600	80 - 600								
DP65/300800	100 - 800								

The flow controller are based on a modular design and can be conditionally arranged individually.
Type key page 154 - 155

* By ordering please specify the mounting position (vertical or horizontal) and the flow direction.

Type **SC250..** **for water dependent of position**

Material quality:	Stainless steel
Electrical connection / Ingress protection class:	Aluminium / IP 65
Process connection:	Flange
Display:	Analogue display
Design pressure:	0 bar ... see table
Design temperature:	-50°C ... 200°C
Viscosity range:	10 cP
Accuracy:	±2,5 % of full scale
Gasket:	-
Mounting position / Flow direction:	Vertical / Bottom-up
Approvals:	ATEX Ex ia IIC T4 (only measuring transducer) EAC TR CU 004/2011 & 020/2011

Monitoring functions

Function:	Change over (SPDT)
Switching capacity:	230 V / 1 A / 50 VA
Maximal number of contacts:	1 piece (optional 2 pieces)
Ambient temperature:	-25°C ... 70°C
	Alternative with measuring transducer
Power supply:	12 ... 24 VDC
Analogue output :	4 … 20 mA
Totalizer:	9 digits, size 4,5 mm
Ambient temperature:	-5°C ... 70°C / ATEX -5°C ... 40°C

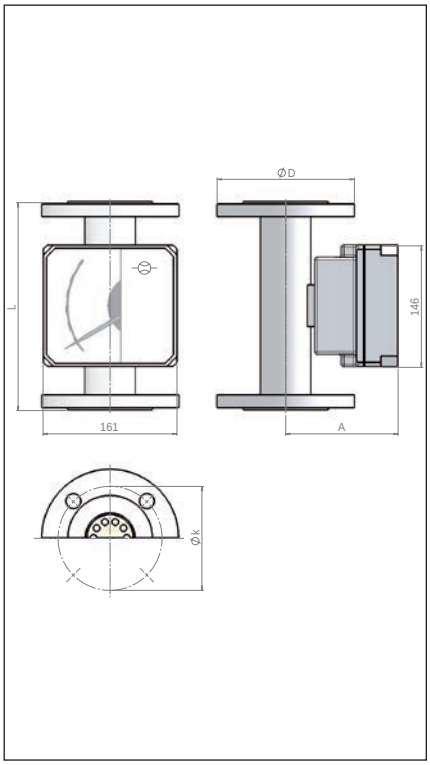

Type		Max. Design pressure	Pressure drop	Process connection	D	k	A	L	Weight	ATEX Approvals
	l/h	bar	mm H_2O		mm	mm	mm	mm	kg	
SC250/15025	2,5- 25	40	400	DN 15	95	65	133	250	3,5	
SC250/15040	4 - 40	40	400							
SC250/15060	6 - 60	40	400							
SC250/15100	10 - 100	40	400							
SC250/15160	16 - 160	40	500							
SC250/15250	25 - 250	40	500							
SC250/15400	40 - 400	40	500							
SC250/15600	60 - 600	40	500							
SC250/25100	100 - 1000	40	600	DN 25	115	85	146	250	4,5	
SC250/25160	160 - 1600	40	700							
SC250/25250	250 - 2500	40	900							
SC250/25400	400 - 4000	40	1100							
SC250/40400	400 - 4000	40	450	DN 40	150	110	154	250	7,3	
SC250/40600	500 - 6300	40	550							
SC250/40800	800 - 8000	40	900							
SC250/50800	800 - 8000	40	700	DN 50	165	125	167	250	8,3	
SC250/50100	1000 - 10000	40	900							
SC250/50150	1500 - 15000	40	1000							

The flow controller are based on a modular design and can be conditionally arranged individually.
Type key page 154 - 155

Heinrich Kübler AG
Ruessenstrasse 4 | CH-6340 Baar | Phone +41 (0)41 766 62 62 | Fax +41 (0)41 766 62 63 | E-Mail info@kubler.ch | Internet www.kubler.ch

Type **SC250..** **for water independent of position**

Material quality:	Stainless steel
Electrical connection / Ingress protection class:	Aluminium / IP 65
Process connection:	Flange
Display:	Analogue display
Design pressure:	0 bar ... see table
Design temperature:	-50°C ... 200°C
Viscosity range:	10 cP
Accuracy:	±2,5 % of full scale
Gasket:	-
Mounting position / Flow direction:	Vertical / Bottom-up
Approvals:	ATEX Ex ia IIC T4 (only measuring transducer) EAC TR CU 004/2011 & 020/2011

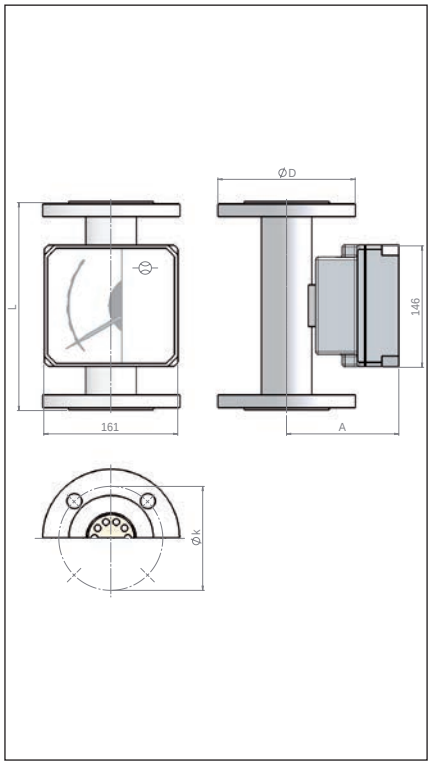

Monitoring functions

Function:	Change over (SPDT)
Switching capacity:	230 V / 1 A / 50 VA
Maximal number of contacts:	1 piece (optional 2 pieces)
Ambient temperature:	-25°C ... 70°C
	Alternative with measuring transducer
Power supply:	12 ... 24 VDC
Analogue output :	4 … 20 mA
Totalizer:	9 digits, size 4,5 mm
Ambient temperature:	-5°C ... 70°C / ATEX -5°C ... 40°C

Type		Max. Design pressure	Pressure drop	Process connection	D	k	A	L	Weight	ATEX Approvals
	l/h	bar	mm H_2O		mm	mm	mm	mm	kg	
SC250/65150	1500 - 15000	16	700	DN 65	185	145	176	250	10	
SC250/65200	2000 - 20000	16	1000							
SC250/80020	2000 - 20000	16	800	DN 80	200	160	192	250	12	
SC250/80025	2500 - 25000	16	1000							
SC250/80030	3000 - 30000	16	1200							
SC250/81040	4000 - 40000	16	1000	DN 100	220	180	211	250	15	
SC250/81050	5000 - 50000	16	1200							
SC250/81060	6000 - 60000	16	1500							
SC250/82080	8000 - 80000	16	1200	DN 125	250	210	236	250	20	
SC250/82100	10000 - 100000	16	1500							
SC250/82120	12000 - 120000	16	1800							
SC250/83150	15000 - 150000	16	2200	DN 150	285	240	262	300	32	
SC250/83180	18000 - 180000	16	2200							

The flow controller are based on a modular design and can be conditionally arranged individually.
Type key page 154 - 155

Type **SCL250..** **for air dependent of position**

Material quality:	Stainless steel
Electrical connection / Ingress protection class:	Aluminium / IP 65
Process connection:	Flange
Display:	Analogue display
Design pressure:	0 bar ... see table
Design temperature:	-50°C ... 200°C
Viscosity range:	10 cP
Accuracy:	±2,5 % of full scale
Gasket:	-
Mounting position / Flow direction:	Vertical / Bottom-up
Approvals:	ATEX Ex ia IIC T4 (only measuring transducer) EAC TR CU 004/2011 & 020/2011

Monitoring functions

Function:	Change over (SPDT)
Switching capacity:	230 V / 1 A / 50 VA
Maximal number of contacts:	1 piece (optional 2 pieces)
Ambient temperature:	-25°C ... 70°C
	Alternative with measuring transducer
Power supply:	12 ... 24 VDC
Analogue output :	4 … 20 mA
Totalizer:	9 digits, size 4,5 mm
Ambient temperature:	-5°C ... 70°C / ATEX -5°C ... 40°C

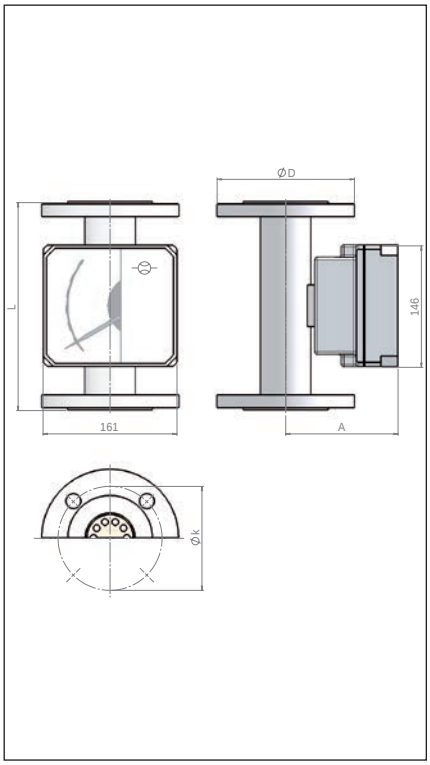

Type		Max. Design pressure	Pressure drop	Process connection	D	k	A	L	Weight	ATEX Approvals
	Nm^3/h	bar	mm H_2O		mm	mm	mm	mm	kg	
SCL250/15025	0,07 - 0,7	40	400	DN 15	95	65	133	250	3,5	
SCL250/15040	0,12 - 1,2	40	400							
SCL250/15060	0,18 - 1,8	40	400							
SCL250/15100	0,3 - 3	40	400							
SCL250/15160	0,5 - 5	40	500							
SCL250/15250	0,7 - 7,5	40	500							
SCL250/15400	1,2 - 12	40	500							
SCL250/15600	1,8 - 18	40	500							
SCL250/25100	3 - 30	40	600	DN 25	115	85	146	250	4,5	
SCL250/25160	5 - 50	40	700							
SCL250/25250	7 - 75	40	900							
SCL250/25400	12 - 120	40	1100							
SCL250/40400	12 - 120	40	450	DN 40	150	110	154	250	7,3	
SCL250/40600	15 - 180	40	550							
SCL250/40800	24 - 240	40	900							
SCL250/50800	24 - 240	40	700	DN 50	165	125	167	250	8,3	
SCL250/50100	30 - 300	40	900							
SCL250/50150	45 - 450	40	1000							

The flow controller are based on a modular design and can be conditionally arranged individually.
Type key page 154 - 155

Heinrich Kübler AG
Ruessenstrasse 4 | CH-6340 Baar | Phone +41 (0)41 766 62 62 | Fax +41 (0)41 766 62 63 | E-Mail info@kubler.ch | Internet www.kubler.ch

Type **SCL250..** **for air independent of position**

Material quality:	Stainless steel
Electrical connection / Ingress protection class:	Aluminium / IP 65
Process connection:	Flange
Display:	Analogue display
Design pressure:	0 bar ... see table
Design temperature:	-50°C ... 200°C
Viscosity range:	10 cP
Accuracy:	±2,5 % of full scale
Gasket:	-
Mounting position / Flow direction:	Vertical / Bottom-up
Approvals:	ATEX Ex ia IIC T4 (only measuring transducer) EAC TR CU 004/2011 & 020/2011

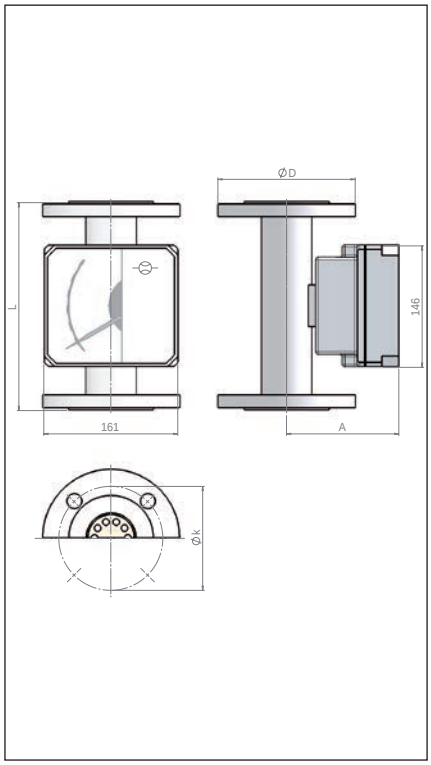

Monitoring functions

Function:	Change over (SPDT)
Switching capacity:	230 V / 1 A / 50 VA
Maximal number of contacts:	1 piece (optional 2 pieces)
Ambient temperature:	-25°C ... 70°C
	Alternative with measuring transducer
Power supply:	12 ... 24 VDC
Analogue output :	4 … 20 mA
Totalizer:	9 digits, size 4,5 mm
Ambient temperature:	-5°C ... 70°C / ATEX -5°C ... 40°C

Type		Max. Design pressure	Pressure drop	Process connection	D	k	A	L	Weight	ATEX Approvals
	Nm^3/h	bar	mm H_2O		mm	mm	mm	mm	kg	
SCL250/65150	45 - 450	16	700	DN 65	185	145	176	250	10	
SCL250/65200	60 - 600	16	1000							
SCL250/80020	60 - 600	16	800	DN 80	200	160	192	250	12	
SCL250/80025	75 - 750	16	1000							
SCL250/80030	90 - 900	16	1200							
SCL250/81040	120 - 1200	16	1000	DN 100	220	180	211	250	15	
SCL250/81050	150 - 1500	16	1200							
SCL250/81060	180 - 1800	16	1500							
SCL250/82080	240 - 2400	16	1200	DN 125	250	210	236	250	20	
SCL250/82100	300 - 3000	16	1500							
SCL250/82120	360 - 3600	16	1800							
SCL250/83150	450 - 4500	16	2200	DN 150	285	240	262	300	32	
SCL250/83180	500 - 5400	16	2200							

The flow controller are based on a modular design and can be conditionally arranged individually.
Type key page 154 - 155

Magnetic position monitoring

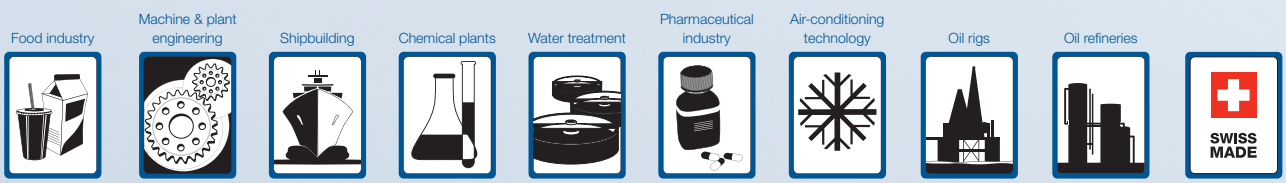

1008

MAGNETIC SWITCHES

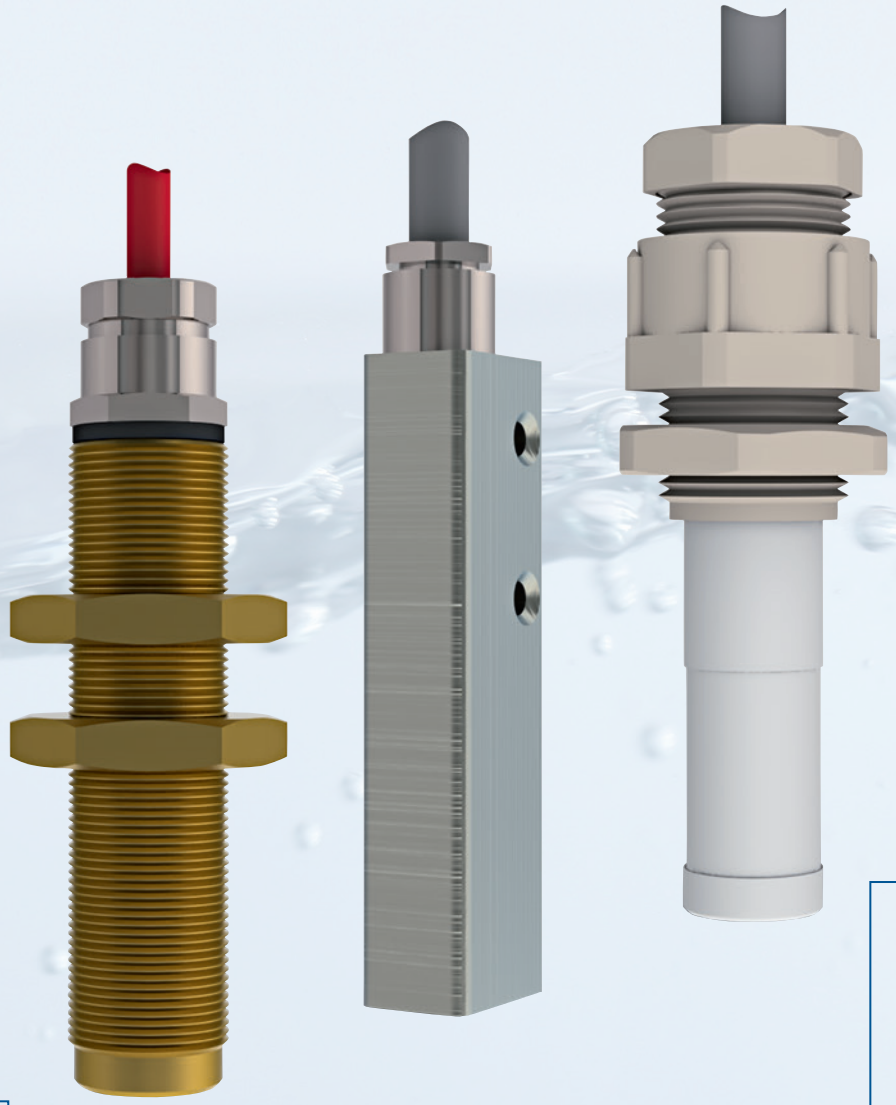

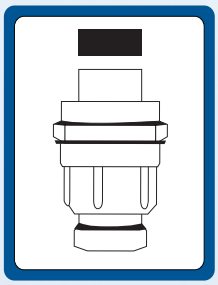

Table of content

Magnetic Switches / Content 184
Magnetic Switches / Function description 185
Magnetic Switches / Type key 186
Magnetic Switches / Type key 187
Magnetic Switches / Stainless steel 188
Magnetic Switches / Stainless steel 189
Magnetic Switches / Brass 190
Magnetic Switches / Brass 191
Magnetic Switches / Polyamide 192
Magnetic Switches / Polyamide 193
Magnetic Switches / Polyamide 194
Magnetic Switches / Polyamide 195
Magnetic Switches / Polyamide 196
Magnetic Switches / Polyamide 197
Magnetic Switches / Polyamide 198
Magnetic Switches / Polyamide 199
Magnetic Switches / Polyethylene 200
Magnetic Switches / Polyethylene 201
Magnetic Switches / Aluminium 202
Magnetic Switches / Magnets / Actuation distances 203

Heinrich Kübler AG
Ruessenstrasse 4 | CH-6340 Baar | Phone +41 (0)41 766 62 62 | Fax +41 (0)41 766 62 63 | E-Mail info@kubler.ch | Internet www.kubler.ch

Function description

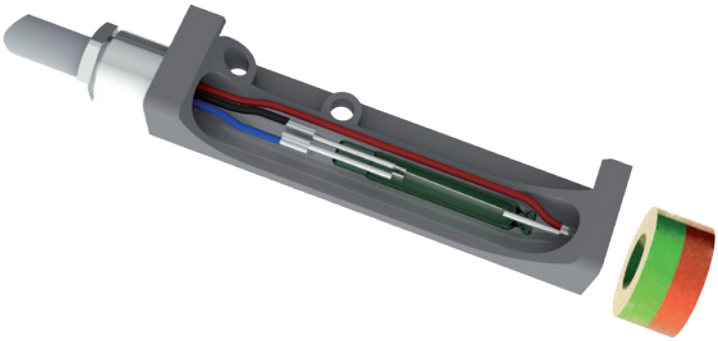

A magnet switch contact consists of two flat contact blades which have been infused into a glass bulb filled with protective gas. Due to the approach of a permanent magnet the interleaved ends of the contact blades are attracted to each other and touch each other abruptly. With the permanent magnet removed the contact blades will promptly demagnetise themselves and leap back into their idle state. A magnet switch has an almost complete lack of idleness and it may be called a „ quasi-electronic component “.

Connection diagrams

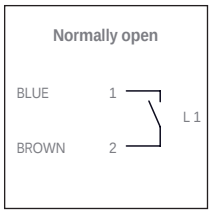

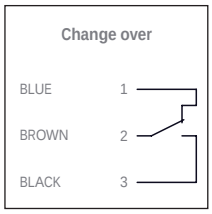

Contact protection

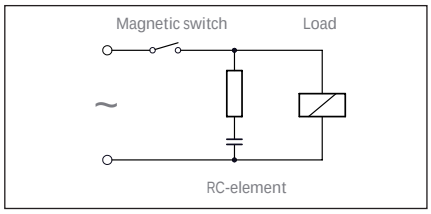

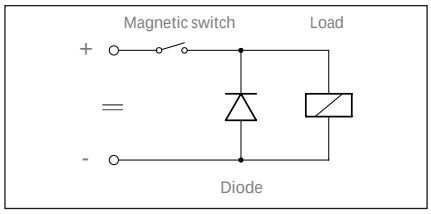

RC-networks for inductive-load contact protection

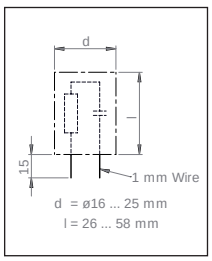

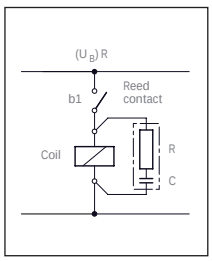

For reed contacts from 10 - 40 VA				For reed contacts from 40 -100 VA			
Type	Capacity	Resistor	Voltage	Type	Capacity	Resistor	Voltage
A3/24	0.33 µF	100 Ohm	24 VAC	B3/24	0.33 µF	100 Ohm	24 VAC
A3/110	0.33 µF	470 Ohm	110 VAC	B3/110	0.33 µF	470 Ohm	110 VAC
A3/220	0.33 µF	1000 Ohm	230 VAC	B3/220	0.33 µF	820 Ohm	230 VAC
A4/24	0.47 µF	100 Ohm	24 VAC	B4/24	0.47 µF	100 Ohm	24 VAC
A4/110	0.47 µF	470 Ohm	110 VAC	B4/110	0.47 µF	470 Ohm	110 VAC
A4/220	0.47 µF	1000 Ohm	230 VAC	B4/220	0.47 µF	820 Ohm	230 VAC

ATEX*

II 2G Ex ia IIC T6 - T1 Gb
II 2D Ex tb IIIC T80°C - T300°C Db IP6X

II 2G Ex d IIC T6 - T4 Gb
II 2D Ex tb IIIC T80°C - T120°C Db IP6X

II 2G Ex mb IIC T6 - T5 Gb
II 2D Ex tb IIIC T80°C - T95°C Db IP6X

Ambient temperature Exia max. 180°C / Exm max. 95°C

Type of protection intrinsic safety Ex ia IIC	I_i ≤ 100 mA		
Type of protection intrinsic safety Ex ia IIC with option /R22 (resistor)	I_i ≤ 100 mA		
Type of protection intrinsic safety Ex ia IIC with option /N (NAMUR EN 60947)	U_i ≤ 15 VDC	I_i ≤ 60 mA	
Type of protection „flameproof enclosure“	U_N ≤ 250 VDC/AC	I_N ≤ 100 mA	
Type of protection „flameproof enclosure“ with option /R22 (resistor)	U_N ≤ 250 VDC/AC	I_N ≤ 100 mA	P_V ≤ 0.21 W
Type of protection „flameproof enclosure“ with option /N (NAMUR EN 60947)	U_N ≤ 15 VDC	I_N ≤ 60 mA	

* = The approval is dependent on the equipment combination

Heinrich Kübler AG
Ruessenstrasse 4 | CH-6340 Baar | Phone +41 (0)41 766 62 62 | Fax +41 (0)41 766 62 63 | E-Mail info@kubler.ch | Internet www.kubler.ch

Code 1

	Key 1 … / … - **Electrical connection**		Key 2 … / … - **Installation connection**
K	Connection cable	E	Thread upwards, G/BSP
K68	Connection cable IP 68 (only for G 3/8“)	LM	Thread longitudinal, metric
		PG	PG cable entry
		OP	Without mounting connection

Code 2

	Key 1 … - **Threaded connection**		Key 1 … - **Without process connection**
…	Thread size	X	Without mounting connection / mounting see datasheet

Code 3

	Key 1 … / … / … / … / … - **Housing material quality**		Key 2 … / … / … / … / … - **Switch function**		Key 3 … / … / … / … / … - **Switch option**
V	Stainless steel	U	Change over (SPDT)	R22	Switch protective circuit with 22 ohm / 0.21 W resistor
ME	Brass	S	Normally open (NO)	N	Switch protective circuit according to NAMUR EN 60947
AL	Aluminium	O	Normally closed (NC)		
PA	Polyamide				
PE	Polyethylene				

Code 3

	Key 4 … / … / … / … / … - **Contact material / Switch behaviour**		Key 5 … / … / … / … / … - **Actuation**
RMO	Rhodium Monostable	STB	Front activated
RBI	Rhodium Bistable	SEB	Side activated
WMO	Wolfram Monostable		

Code 4

	Key 1 … - **Housing length**
L…	Housing length in mm

Code 5

	Key 1 … - **Form of housing**
RU	Round contact profile
RE	Angular contact profile

Example

Code	1				2		3									4		5		6							7		
Key	1	/	2	-	1	-	1	/	2	/	3	/	4	/	5	-	1	-	1	-	1	/	2	/	3	-	1	/	2
Example	K	/	E	-	3/8	-	V	/	S	/	R22	/	RMO	/	STB	-	L70	-	RU	-	1	/	PVCB	/	KA	-	EXIAG	/	

Black = not possible according to Atex / Blue = possible according to Atex Exia / Blue[1] = possible according to Atex Exia and Exd / Black[1] = possible according to Atex Exd

Heinrich Kübler AG
Ruessenstrasse 4 | CH-6340 Baar | Phone +41 (0)41 766 62 62 | Fax +41 (0)41 766 62 63 | E-Mail info@kubler.ch | Internet www.kubler.ch

Code 6

	Key 1 … / … / … - **Length of cable**		Key 2 … / … / … - **Connection cable**		Key 3 … / … / … - **Connection cable option**
…	Length of cable in meter	PVC[1]	PVC connection cable	KA[1]	Shielded
		PVCB[1]	PVC connection cable with blue coating	KB[1]	Shielded / oil-resistant
		SIL[1]	Silicone connection cable	KC[1]	Shielded / oil-resistant / halogen-free
		PUR[1]	PUR connection cable	KD[1]	Oil-resistant
		RAD[1]	Radox connection cable	KE[1]	Oil-resistant / halogen-free
				KF[1]	Halogen-free

Code 7

	Key 1 … / … - **Approvals / 1**		Key 2 … / … - **Approvals / 2**
EXIAG	Acc. to Exia, atmosphere gas	ABS	Approval American Bureau of Shipping
EXIAGD	Acc. to Exia, atmosphere gas and dust	BV	Approval Bureau Veritas
EXMG	Acc. to Exm, atmosphere gas	GL	Approval Germanischer Lloyd
EXMGD	Acc. to Exm, atmosphere gas and dust	LR	Approval Lloyd's Register
		EAC1	Approval EAC TR CU 004/2011 & 012/2011 & 020/2011

Example

Code	1				2		3									4		5		6							7		
Key	1	/	2	-	1	-	1	/	2	/	3	/	4	/	5	-	1	-	1	-	1	/	2	/	3	-	1	/	2
Example	K	/	E	-	3/8	-	V	/	S	/	R22	/	RMO	/	STB	-	L70	-	RU	-	1	/	PVCB	/	KA	-	EXIAG	/	

Black = not possible according to Atex / Blue = possible according to Atex Exia / Blue[1] = possible according to Atex Exia and Exd / Black[1] = possible according to Atex Exd

Type	**K/E-3/8-V/S/RMO/STB-L70-RU-../PVC**
Material quality:	Stainless steel
Electrical connection:	Connection cable
Ambient temperature	
- with PVC connection cable:	-20°C ... +80°C
- with Silicone connection cable:	-60°C ... +180°C
- with PUR connection cable:	-40°C ... +80°C
Installation connection:	G 3/8“
Switch function:	Normally open (NO)
Contact material:	Rhodium
Switch behaviour:	Monostable
Switching capacity:	230 V / 1.0 A / 100 VA
Switching capacity ATEX Exia / Exm:	100 mA / NAMUR 60 mA
Switching frequency:	300 / sec.
Switching hysteresis:	ca. 5 mm
Actuation distances / Magnets page 203	
Actuation:	Front activated
Design pressure:	0 bar ... 0.5 bar
Design temperature:	-60°C ... +180°C
Ingress protection class:	IP 55
Approvals / Certificates:	ABS / ATEX / BV / EAC / GL / LR / SIL1

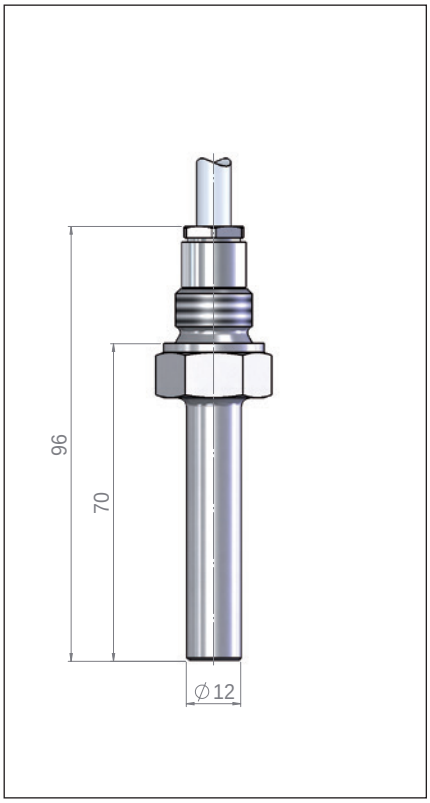

Type	**K/E-3/8-V/U/RMO/STB-L70-RU-../PVC**
Material quality:	Stainless steel
Electrical connection:	Connection cable
Ambient temperature	
- with PVC connection cable:	-20°C ... +80°C
- with Silicone connection cable:	-60°C ... +180°C
- with PUR connection cable:	-40°C ... +80°C
Installation connection:	G 3/8“
Switch function:	Change over (SPDT)
Contact material:	Rhodium
Switch behaviour:	Monostable
Switching capacity:	230 V / 0.5 A / 30 VA
Switching capacity ATEX Exia / Exm:	100 mA / NAMUR 60 mA
Switching frequency:	300 / sec.
Switching hysteresis:	ca. 5 mm
Actuation distances / Magnets page 203	
Actuation:	Front activated
Design pressure:	0 bar ... 0.5 bar
Design temperature:	-60°C ... +180°C
Ingress protection class:	IP 55
Approvals / Certificates:	ABS / ATEX / BV / EAC / GL / LR / SIL1

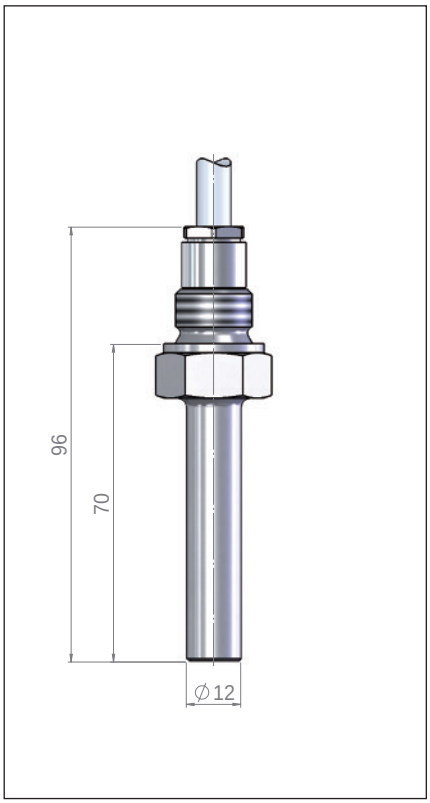

The magnetic switches are based on a modular design and can be conditionally arranged individually.
Type key page 186 - 187

Heinrich Kübler AG
Ruessenstrasse 4 | CH-6340 Baar | Phone +41 (0)41 766 62 62 | Fax +41 (0)41 766 62 63 | E-Mail info@kubler.ch | Internet www.kubler.ch

Type	**K/E-3/8-V/S/RMO/STB-L100-RU-../PVC**
Material quality:	Stainless steel
Electrical connection:	Connection cable
Ambient temperature	
- with PVC connection cable:	-20°C ... +80°C
- with Silicone connection cable:	-60°C ... +180°C
- with PUR connection cable:	-40°C ... +80°C
Installation connection:	G 3/8“
Switch function:	Normally open (NO)
Contact material:	Rhodium
Switch behaviour:	Monostable
Switching capacity:	230 V / 1.0 A / 100 VA
Switching capacity ATEX Exia / Exm:	100 mA / NAMUR 60 mA
Switching frequency:	300 / sec.
Switching hysteresis:	ca. 5 mm
Actuation distances / Magnets page 203	
Actuation:	Front activated
Design pressure:	0 bar ... 0.5 bar
Design temperature:	-60°C ... +180°C
Ingress protection class:	IP 55
Approvals / Certificates:	ABS / ATEX / BV / EAC / GL / LR / SIL1

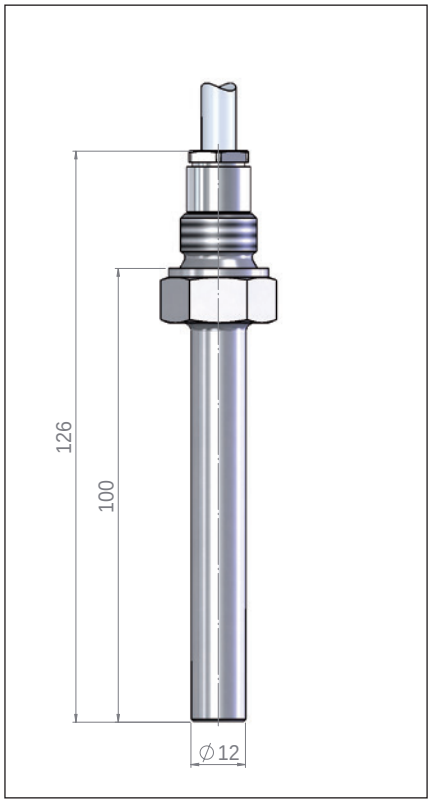

Type	**K/E-3/8-V/U/RMO/STB-L100-RU-../PVC**
Material quality:	Stainless steel
Electrical connection:	Connection cable
Ambient temperature	
- with PVC connection cable:	-20°C ... +80°C
- with Silicone connection cable:	-60°C ... +180°C
- with PUR connection cable:	-40°C ... +80°C
Installation connection:	G 3/8“
Switch function:	Change over (SPDT)
Contact material:	Rhodium
Switch behaviour:	Monostable
Switching capacity:	230 V / 0.5 A / 30 VA
Switching capacity ATEX Exia / Exm:	100 mA / NAMUR 60 mA
Switching frequency:	300 / sec.
Switching hysteresis:	ca. 5 mm
Actuation distances / Magnets page 203	
Actuation:	Front activated
Design pressure:	0 bar ... 0.5 bar
Design temperature:	-60°C ... +180°C
Ingress protection class:	IP 55
Approvals / Certificates:	ABS / ATEX / BV / EAC / GL / LR / SIL1

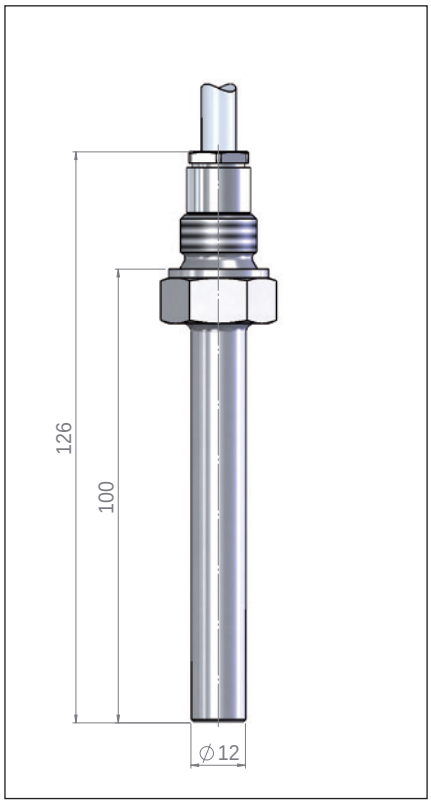

The magnetic switches are based on a modular design and can be conditionally arranged individually.
Type key page 186 - 187

Type **K/LM-10x1-ME/S/RMO/STB-L40-RU-../PVC**

Material quality:	Brass
Electrical connection:	Connection cable
Ambient temperature	
- with PVC connection cable:	-10°C ... +80°C
- with Silicone connection cable:	-10°C ... +95°C
- with PUR connection cable:	-10°C ... +80°C
Installation connection:	Thread longitudinal, metric M10 x 1 mm
Switch function:	Normally open (NO)
Contact material:	Rhodium
Switch behaviour:	Monostable
Switching capacity:	230 V / 1.0 A / 100 VA
Switching capacity ATEX Exia / Exm:	-
Switching frequency:	1000 / sec.
Switching hysteresis:	ca. 5 mm
Actuation distances / Magnets page 203	
Actuation:	Front activated
Design pressure:	0 bar ... 0.5 bar
Design temperature:	-10°C ... +95°C
Ingress protection class:	IP 55
Approvals / Certificates:	ABS / BV / EAC / GL / LR / SIL1

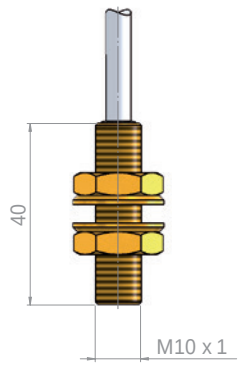

Type **K/LM-10x1-ME/U/RMO/STB-L40-RU-../PVC**

Material quality:	Brass
Electrical connection:	Connection cable
Ambient temperature	
- with PVC connection cable:	-10°C ... +80°C
- with Silicone connection cable:	-10°C ... +95°C
- with PUR connection cable:	-10°C ... +80°C
Installation connection:	Thread longitudinal, metric M10 x 1 mm
Switch function:	Change over (SPDT)
Contact material:	Rhodium
Switch behaviour:	Monostable
Switching capacity:	150 V / 0.5 A / 20 VA
Switching capacity ATEX Exia / Exm:	-
Switching frequency:	1000 / sec.
Switching hysteresis:	ca. 5 mm
Actuation distances / Magnets page 203	
Actuation:	Front activated
Design pressure:	0 bar ... 0.5 bar
Design temperature:	-10°C ... +95°C
Ingress protection class:	IP 55
Approvals / Certificates:	ABS / BV / EAC / GL / LR / SIL1

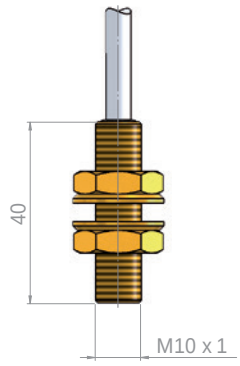

The magnetic switches are based on a modular design and can be conditionally arranged individually.
Type key page 186 - 187

Heinrich Kübler AG
Ruessenstrasse 4 | CH-6340 Baar | Phone +41 (0)41 766 62 62 | Fax +41 (0)41 766 62 63 | E-Mail info@kubler.ch | Internet www.kubler.ch

Type **K/LM-12x1-ME/S/RMO/STB-L70-RU-../PVC**

Material quality:	Brass
Electrical connection:	Connection cable
Ambient temperature	
- with PVC connection cable:	-10°C ... +80°C
- with Silicone connection cable:	-10°C ... +95°C
- with PUR connection cable:	-10°C ... +80°C
Installation connection:	Thread longitudinal, metric M12 x 1 mm
Switch function:	Normally open (NO)
Contact material:	Rhodium
Switch behaviour:	Monostable
Switching capacity:	230 V / 1.0 A / 100 VA
Switching capacity ATEX Exia / Exm:	-
Switching frequency:	300 / sec.
Switching hysteresis:	ca. 5 mm
Actuation distances / Magnets page 203	
Actuation:	Front activated
Design pressure:	0 bar ... 0.5 bar
Design temperature:	-10°C ... +95°C
Ingress protection class:	IP 55
Approvals / Certificates:	ABS / BV / EAC / GL / LR / SIL1

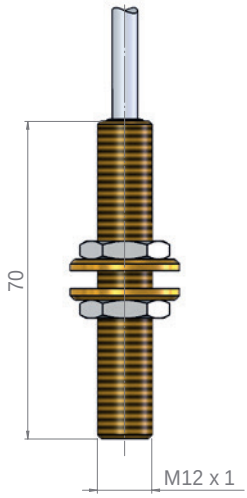

Type **K/LM-12x1-ME/U/RMO/STB-L70-RU-../PVC**

Material quality:	Brass
Electrical connection:	Connection cable
Ambient temperature	
- with PVC connection cable:	-10°C ... +80°C
- with Silicone connection cable:	-10°C ... +95°C
- with PUR connection cable:	-10°C ... +80°C
Installation connection:	Thread longitudinal, metric M12 x 1 mm
Switch function:	Change over (SPDT)
Contact material:	Rhodium
Switch behaviour:	Monostable
Switching capacity:	230 V / 0.5 A / 30 VA
Switching capacity ATEX Exia / Exm:	-
Switching frequency:	300 / sec.
Switching hysteresis:	ca. 5 mm
Actuation distances / Magnets page 203	
Actuation:	Front activated
Design pressure:	0 bar ... 0.5 bar
Design temperature:	-10°C ... +95°C
Ingress protection class:	IP 55
Approvals / Certificates:	ABS / BV / EAC / GL / LR / SIL1

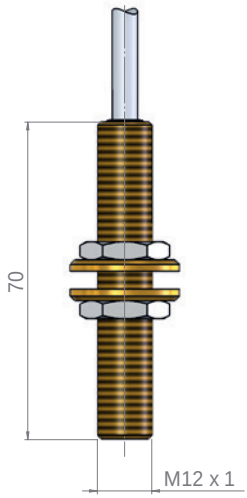

The magnetic switches are based on a modular design and can be conditionally arranged individually.
Type key page 186 - 187

Type	**K/PG-9-PA/S/RMO/STB-L50-RU-../PVC**
Material quality:	Polyamide
Electrical connection:	Connection cable
Ambient temperature	
- with PVC connection cable:	-15°C ... +80°C
- with Silicone connection cable:	-15°C ... +80°C
- with PUR connection cable:	-15°C ... +80°C
Installation connection:	PG 9
Switch function:	Normally open (NO)
Contact material:	Rhodium
Switch behaviour:	Monostable
Switching capacity:	230 V / 1.0 A / 100 VA
Switching capacity ATEX Exia / Exm:	-
Switching frequency:	1000 / sec.
Switching hysteresis:	ca. 5 mm
Actuation distances / Magnets page 203	
Actuation:	Front activated
Design pressure:	0 bar ... 0.5 bar
Design temperature:	-15°C ... +80°C
Ingress protection class:	IP 65
Approvals / Certificates:	ABS / BV / EAC / GL / LR / SIL1

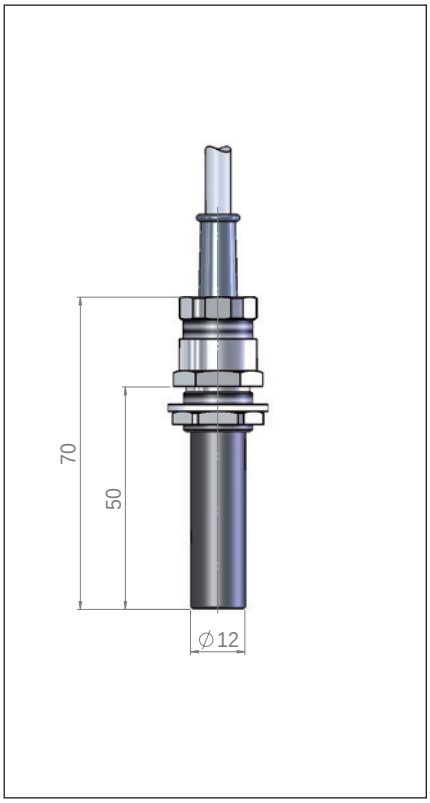

Type	**K/PG-9-PA/S/RMO/STB-L60-RU-../PVC**
Material quality:	Polyamide
Electrical connection:	Connection cable
Ambient temperature	
- with PVC connection cable:	-15°C ... +80°C
- with Silicone connection cable:	-15°C ... +80°C
- with PUR connection cable:	-15°C ... +80°C
Installation connection:	PG 9
Switch function:	Normally open (NO)
Contact material:	Rhodium
Switch behaviour:	Monostable
Switching capacity:	230 V / 1.0 A / 100 VA
Switching capacity ATEX Exia / Exm:	-
Switching frequency:	300 / sec.
Switching hysteresis:	ca. 5 mm
Actuation distances / Magnets page 203	
Actuation:	Front activated
Design pressure:	0 bar ... 0.5 bar
Design temperature:	-15°C ... +80°C
Ingress protection class:	IP 65
Approvals / Certificates:	ABS / BV / EAC / GL / LR / SIL1

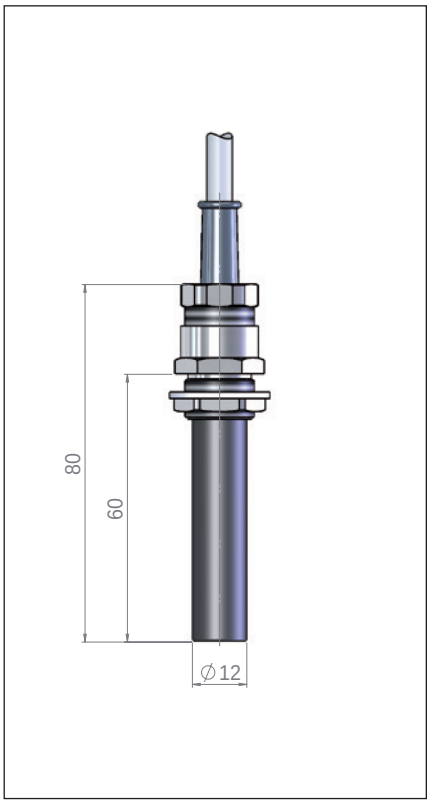

The magnetic switches are based on a modular design and can be conditionally arranged individually.
Type key page 186 - 187

Heinrich Kübler AG
Ruessenstrasse 4 | CH-6340 Baar | Phone +41 (0)41 766 62 62 | Fax +41 (0)41 766 62 63 | E-Mail info@kubler.ch | Internet www.kubler.ch

Type	**K/PG-9-PA/U/RMO/STB-L60-RU-../PVC**
Material quality:	Polyamide
Electrical connection:	Connection cable
Ambient temperature	
- with PVC connection cable:	-15°C ... +80°C
- with Silicone connection cable:	-15°C ... +80°C
- with PUR connection cable:	-15°C ... +80°C
Installation connection:	PG 9
Switch function:	Change over (SPDT)
Contact material:	Rhodium
Switch behaviour:	Monostable
Switching capacity:	230 V / 0.5 A / 30 VA
Switching capacity ATEX Exia / Exm:	-
Switching frequency:	300 / sec.
Switching hysteresis:	ca. 5 mm
Actuation distances / Magnets page 203	
Actuation:	Front activated
Design pressure:	0 bar ... 0.5 bar
Design temperature:	-15°C ... +80°C
Ingress protection class:	IP 65
Approvals / Certificates:	ABS / BV / EAC / GL / LR / SIL1

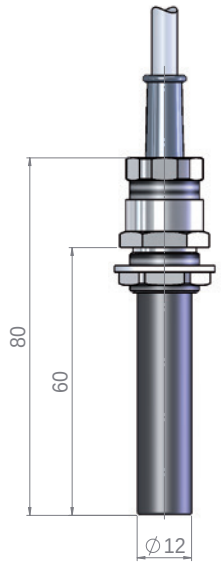

Type	**K/PG-9-PA/U/WMO/STB-L60-RU-../PVC**
Material quality:	Polyamide
Electrical connection:	Connection cable
Ambient temperature	
- with PVC connection cable:	-15°C ... +80°C
- with Silicone connection cable:	-15°C ... +80°C
- with PUR connection cable:	-15°C ... +80°C
Installation connection:	PG 9
Switch function:	Change over (SPDT)
Contact material:	Wolfram
Switch behaviour:	Monostable
Switching capacity:	230 V / 0.5 A / 30 VA
Switching capacity ATEX Exia / Exm:	-
Switching frequency:	100 / sec.
Switching hysteresis:	ca. 2 - 3 mm
Actuation distances / Magnets page 203	
Actuation:	Front activated
Design pressure:	0 bar ... 0.5 bar
Design temperature:	-10°C ... +80°C
Ingress protection class:	IP 65
Approvals / Certificates:	ABS / BV / EAC / GL / LR / SIL1

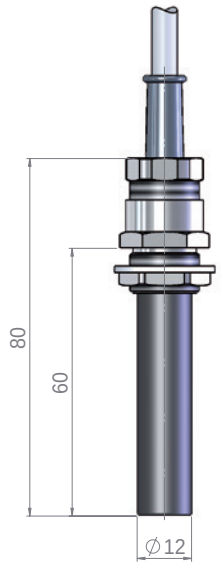

The magnetic switches are based on a modular design and can be conditionally arranged individually.
Type key page 186 - 187

Type	**K/PG-9-PA/S/RMO/SEB-L80-RU-../PVC**
Material quality:	Polyamide
Electrical connection:	Connection cable
Ambient temperature	
- with PVC connection cable:	-15°C ... +80°C
- with Silicone connection cable:	-15°C ... +80°C
- with PUR connection cable:	-15°C ... +80°C
Installation connection:	PG 9
Switch function:	Normally open (NO)
Contact material:	Rhodium
Switch behaviour:	Monostable
Switching capacity:	230 V / 1.0 A / 100 VA
Switching capacity ATEX Exia / Exm:	-
Switching frequency:	300 / sec.
Switching hysteresis:	ca. 3 - 5 mm
Actuation distances / Magnets page 203	
Actuation:	Side activated
Design pressure:	0 bar ... 0.5 bar
Design temperature:	-15°C ... +80°C
Ingress protection class:	IP 65
Approvals / Certificates:	ABS / BV / EAC / GL / LR / SIL1

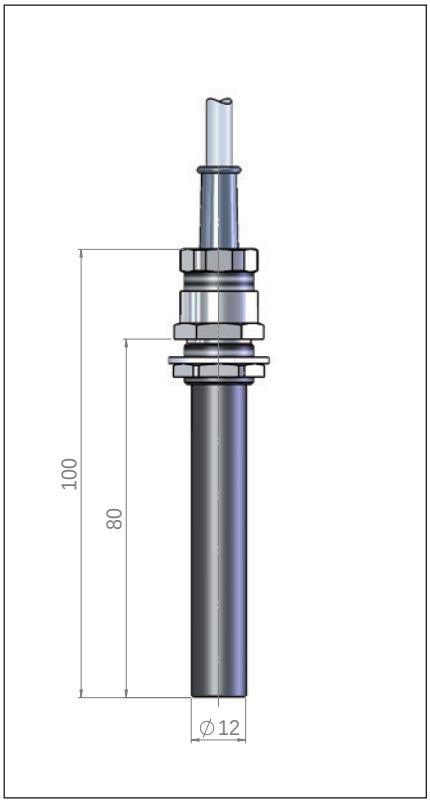

Type	**K/PG-9-PA/U/RMO/SEB-L80-RU-../PVC**
Material quality:	Polyamide
Electrical connection:	Connection cable
Ambient temperature	
- with PVC connection cable:	-15°C ... +80°C
- with Silicone connection cable:	-15°C ... +80°C
- with PUR connection cable:	-15°C ... +80°C
Installation connection:	PG 9
Switch function:	Change over (SPDT)
Contact material:	Rhodium
Switch behaviour:	Monostable
Switching capacity:	230 V / 0.5 A / 30 VA
Switching capacity ATEX Exia / Exm:	-
Switching frequency:	300 / sec.
Switching hysteresis:	ca. 3 - 5 mm
Actuation distances / Magnets page 203	
Actuation:	Side activated
Design pressure:	0 bar ... 0.5 bar
Design temperature:	-15°C ... +80°C
Ingress protection class:	IP 65
Approvals / Certificates:	ABS / BV / EAC / GL / LR / SIL1

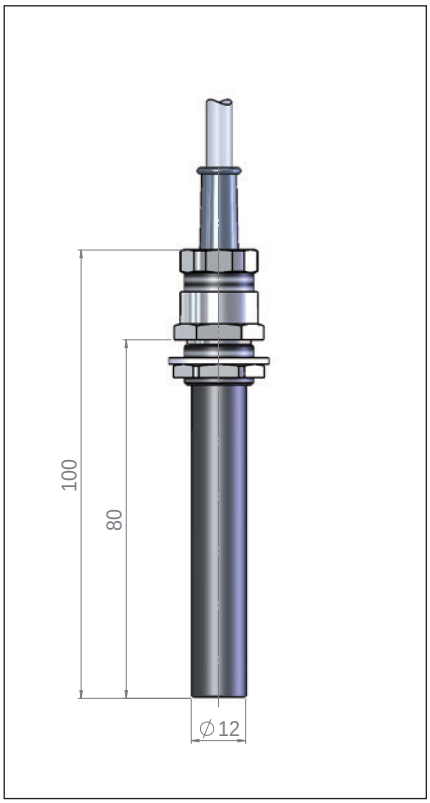

The magnetic switches are based on a modular design and can be conditionally arranged individually.
Type key page 186 - 187

Heinrich Kübler AG
Ruessenstrasse 4 | CH-6340 Baar | Phone +41 (0)41 766 62 62 | Fax +41 (0)41 766 62 63 | E-Mail info@kubler.ch | Internet www.kubler.ch

Type	**K/PG-16-PA/S/RBI/STB-L75-RU-../PVC**
Material quality:	Polyamide
Electrical connection:	Connection cable
Ambient temperature	
- with PVC connection cable:	-15°C ... +80°C
- with Silicone connection cable:	-15°C ... +80°C
- with PUR connection cable:	-15°C ... +80°C
Installation connection:	PG 16
Switch function:	Normally open (NO)
Contact material:	Rhodium
Switch behaviour:	Bistable
Switching capacity:	230 V / 1.0 A / 100 VA
Switching capacity ATEX Exia / Exm:	-
Switching frequency:	1000 / sec.
Switching hysteresis:	-
Actuation distances / Magnets page 203	
Actuation:	Front activated
Design pressure:	0 bar ... 0.5 bar
Design temperature:	-15°C ... +80°C
Ingress protection class:	IP 65
Approvals / Certificates:	ABS / BV / EAC / GL / LR / SIL1

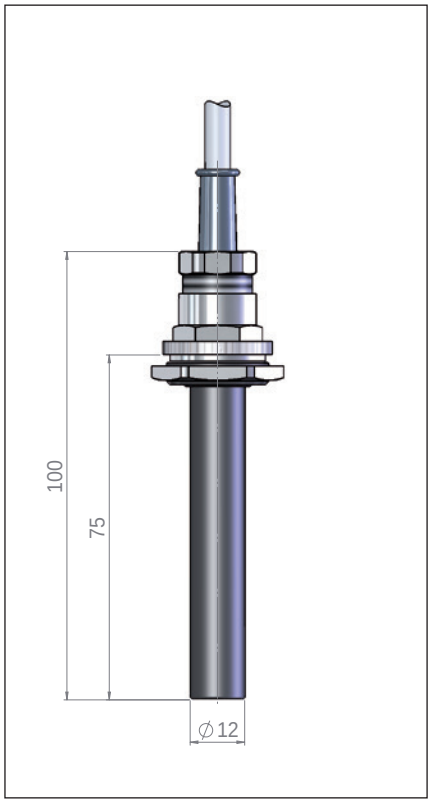

Type	**K/PG-16-PA/U/RBI/STB-L75-RU-../PVC**
Material quality:	Polyamide
Electrical connection:	Connection cable
Ambient temperature	
- with PVC connection cable:	-15°C ... +80°C
- with Silicone connection cable:	-15°C ... +80°C
- with PUR connection cable:	-15°C ... +80°C
Installation connection:	PG 16
Switch function:	Change over (SPDT)
Contact material:	Rhodium
Switch behaviour:	Bistable
Switching capacity:	230 V / 0.5 A / 30 VA
Switching capacity ATEX Exia / Exm:	-
Switching frequency:	1000 / sec.
Switching hysteresis:	-
Actuation distances / Magnets page 203	
Actuation:	Front activated
Design pressure:	0 bar ... 0.5 bar
Design temperature:	-15°C ... +80°C
Ingress protection class:	IP 65
Approvals / Certificates:	ABS / BV / EAC / GL / LR / SIL1

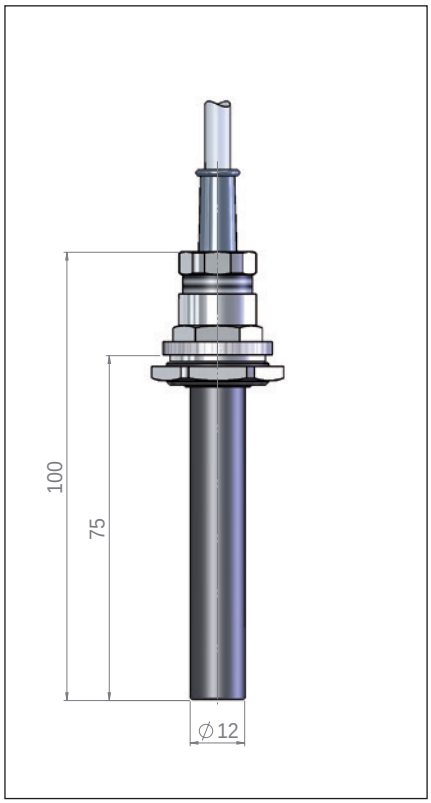

The magnetic switches are based on a modular design and can be conditionally arranged individually.
Type key page 186 - 187

Type **K/LM-18x1.5-PA/S/RMO/STB-L80-RU-../PVC**

Material quality:	Polyamide
Electrical connection:	Connection cable
Ambient temperature	
- with PVC connection cable:	-15°C ... +80°C
- with Silicone connection cable:	-15°C ... +80°C
- with PUR connection cable:	-15°C ... +80°C
Installation connection:	Thread longitudinal, metric M18 x 1.5 mm
Switch function:	Normally open (NO)
Contact material:	Rhodium
Switch behaviour:	Monostable
Switching capacity:	230 V / 1.0 A / 100 VA
Switching capacity ATEX Exia / Exm:	-
Switching frequency:	1000 / sec.
Switching hysteresis:	ca. 5 mm
Actuation distances / Magnets page 203	
Actuation:	Front activated
Design pressure:	0 bar ... 0.5 bar
Design temperature:	-15°C ... +80°C
Ingress protection class:	IP 65
Approvals / Certificates:	ABS / BV / EAC / GL / LR / SIL1

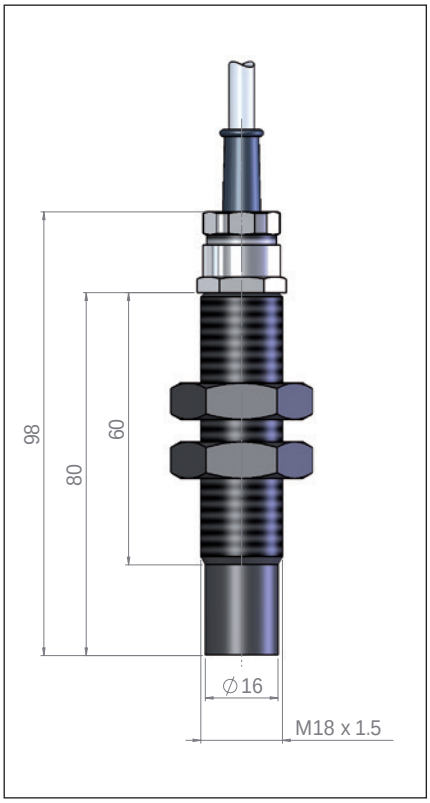

Type **K/LM-18x1.5-PA/U/RMO/STB-L80-RU-../PVC**

Material quality:	Polyamide
Electrical connection:	Connection cable
Ambient temperature	
- with PVC connection cable:	-15°C ... +80°C
- with Silicone connection cable:	-15°C ... +80°C
- with PUR connection cable:	-15°C ... +80°C
Installation connection:	Thread longitudinal, metric M18 x 1.5 mm
Switch function:	Change over (SPDT)
Contact material:	Rhodium
Switch behaviour:	Monostable
Switching capacity:	230 V / 0.5 A / 30 VA
Switching capacity ATEX Exia / Exm:	-
Switching frequency:	1000 / sec.
Switching hysteresis:	ca. 5 mm
Actuation distances / Magnets page 203	
Actuation:	Front activated
Design pressure:	0 bar ... 0.5 bar
Design temperature:	-15°C ... +80°C
Ingress protection class:	IP 65
Approvals / Certificates:	ABS / BV / EAC / GL / LR / SIL1

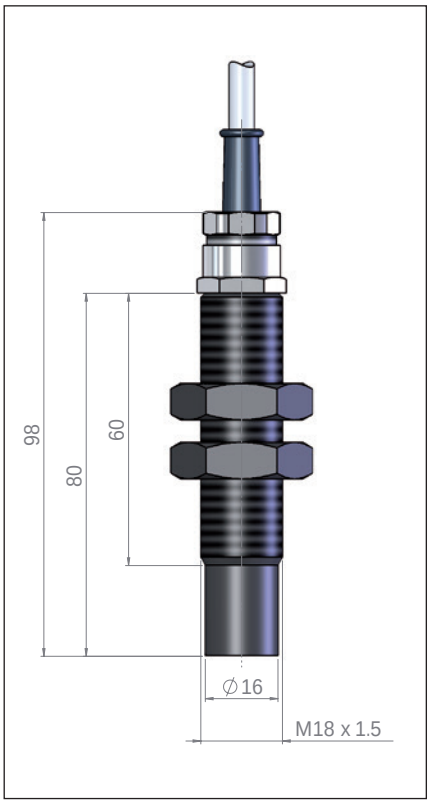

The magnetic switches are based on a modular design and can be conditionally arranged individually.
Type key page 186 - 187

Heinrich Kübler AG
Ruessenstrasse 4 | CH-6340 Baar | Phone +41 (0)41 766 62 62 | Fax +41 (0)41 766 62 63 | E-Mail info@kubler.ch | Internet www.kubler.ch

Type **K/LM-18x1.5-PA/U/RBI/STB-L80-RU-../PVC**

Material quality:	Polyamide
Electrical connection:	Connection cable
Ambient temperature	
- with PVC connection cable:	-15°C ... +80°C
- with Silicone connection cable:	-15°C ... +80°C
- with PUR connection cable:	-15°C ... +80°C
Installation connection:	Thread longitudinal, metric M18 x 1.5 mm
Switch function:	Change over (SPDT)
Contact material:	Rhodium
Switch behaviour:	Bistable
Switching capacity:	230V / 0.5A / 30VA
Switching capacity ATEX Exia / Exm:	-
Switching frequency:	1000 / sec.
Switching hysteresis:	-
Actuation distances / Magnets page 203	
Actuation:	Front activated
Design pressure:	0 bar ... 0.5 bar
Design temperature:	-15°C ... +80°C
Ingress protection class:	IP 65
Approvals / Certificates:	ABS / BV / EAC / GL / LR / SIL1

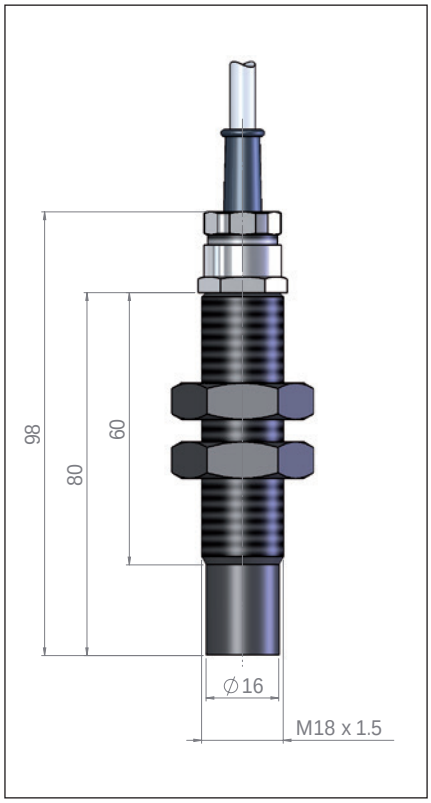

Type **K/OP-X-PA/S/RMO/SEB-L80-RE-../PVC**

Material quality:	Polyamide
Electrical connection:	Connection cable
Ambient temperature	
- with PVC connection cable:	-15°C ... +80°C
- with Silicone connection cable:	-15°C ... +80°C
- with PUR connection cable:	-15°C ... +80°C
Installation connection:	-
Switch function:	Normally open (NO)
Contact material:	Rhodium
Switch behaviour:	Monostable
Switching capacity:	230 V / 1.0 A / 100 VA
Switching capacity ATEX Exia / Exm:	-
Switching frequency:	300 / sec.
Switching hysteresis:	ca. 3 - 4 mm
Actuation distances / Magnets page 203	
Actuation:	Side activated
Design pressure:	0 bar ... 0.5 bar
Design temperature:	-15°C ... +80°C
Ingress protection class:	IP 55
Approvals / Certificates:	ABS / BV / EAC / GL / LR / SIL1

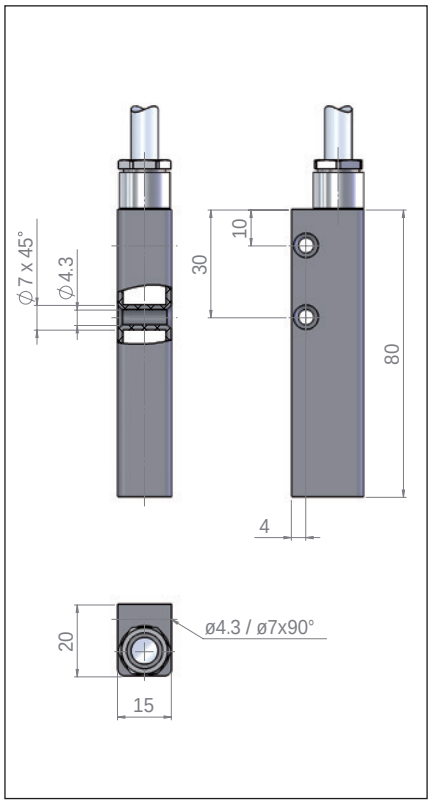

The magnetic switches are based on a modular design and can be conditionally arranged individually.
Type key page 186 - 187

Type	**K/OP-X-PA/S/RMO/STB-L80-RE-../PVC**
Material quality:	Polyamide
Electrical connection:	Connection cable
Ambient temperature	
- with PVC connection cable:	-15°C ... +80°C
- with Silicone connection cable:	-15°C ... +80°C
- with PUR connection cable:	-15°C ... +80°C
Installation connection:	-
Switch function:	Normally open (NO)
Contact material:	Rhodium
Switch behaviour:	Monostable
Switching capacity:	230 V / 1.0 A / 100 VA
Switching capacity ATEX Exia / Exm:	-
Switching frequency:	1000 / sec.
Switching hysteresis:	ca. 5 mm
Actuation distances / Magnets page 203	
Actuation:	Front activated
Design pressure:	0 bar ... 0.5 bar
Design temperature:	-15°C ... +80°C
Ingress protection class:	IP 55
Approvals / Certificates:	ABS / BV / EAC / GL / LR / SIL1

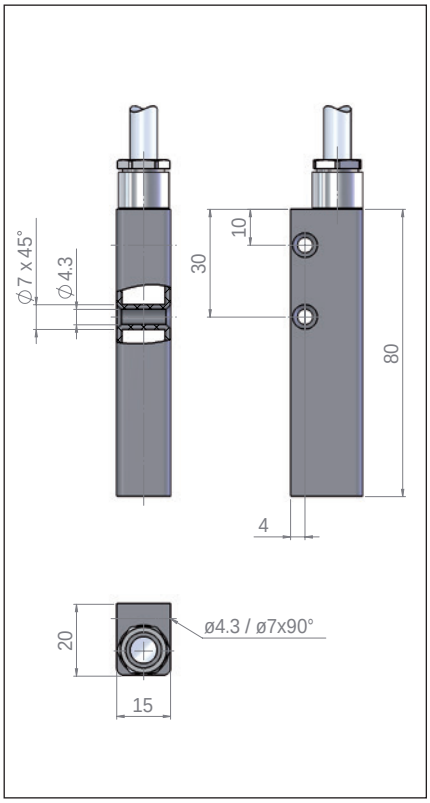

Type	**K/OP-X-PA/U/RMO/STB-L80-RE-../PVC**
Material quality:	Polyamide
Electrical connection:	Connection cable
Ambient temperature	
- with PVC connection cable:	-15°C ... +80°C
- with Silicone connection cable:	-15°C ... +80°C
- with PUR connection cable:	-15°C ... +80°C
Installation connection:	-
Switch function:	Change over (SPDT)
Contact material:	Rhodium
Switch behaviour:	Monostable
Switching capacity:	230 V / 0.5 A / 30 VA
Switching capacity ATEX Exia / Exm:	-
Switching frequency:	1000 / sec.
Switching hysteresis:	ca. 5 mm
Actuation distances / Magnets page 203	
Actuation:	Front activated
Design pressure:	0 bar ... 0.5 bar
Design temperature:	-15°C ... +80°C
Ingress protection class:	IP 55
Approvals / Certificates:	ABS / BV / EAC / GL / LR / SIL1

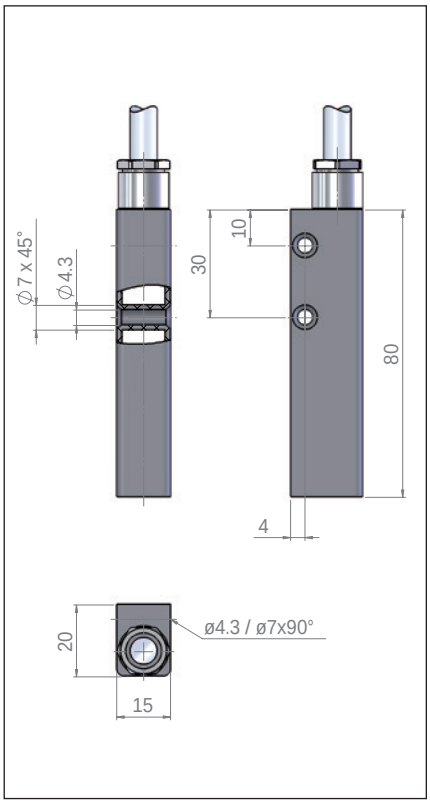

The magnetic switches are based on a modular design and can be conditionally arranged individually.
Type key page 186 - 187

Heinrich Kübler AG
Ruessenstrasse 4 | CH-6340 Baar | Phone +41 (0)41 766 62 62 | Fax +41 (0)41 766 62 63 | E-Mail info@kubler.ch | Internet www.kubler.ch

Type **K/OP-X-PA/S/RBI/STB-L80-RE-../PVC**

Material quality:	Polyamide
Electrical connection:	Connection cable
Ambient temperature	
- with PVC connection cable:	-15°C ... +80°C
- with Silicone connection cable:	-15°C ... +80°C
- with PUR connection cable:	-15°C ... +80°C
Installation connection:	-
Switch function:	Normally open (NO)
Contact material:	Rhodium
Switch behaviour:	Bistable
Switching capacity:	230 V / 1.0 A / 100 VA
Switching capacity ATEX Exia / Exm:	-
Switching frequency:	1000 / sec.
Switching hysteresis:	-
Actuation distances / Magnets page 203	
Actuation:	Front activated
Design pressure:	0 bar ... 0.5 bar
Design temperature:	-15°C ... +80°C
Ingress protection class:	IP 55
Approvals / Certificates:	ABS / BV / EAC / GL / LR / SIL1

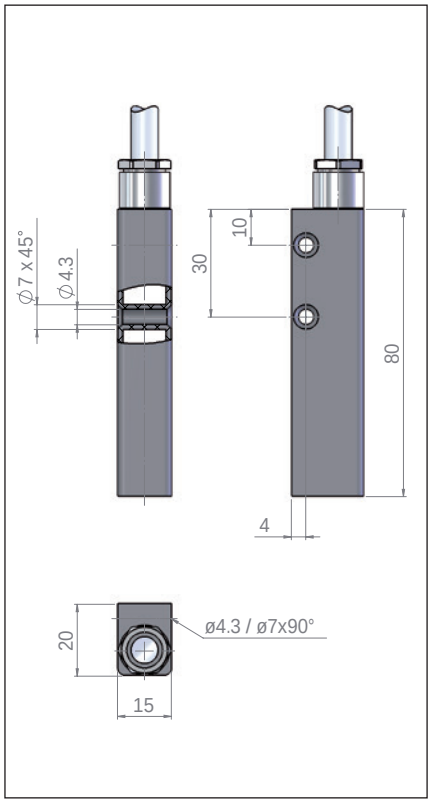

Type **K/OP-X-PA/U/RBI/STB-L80-RE-../PVC**

Material quality:	Polyamide
Electrical connection:	Connection cable
Ambient temperature	
- with PVC connection cable:	-15°C ... +80°C
- with Silicone connection cable:	-15°C ... +80°C
- with PUR connection cable:	-15°C ... +80°C
Installation connection:	-
Switch function:	Change over (SPDT)
Contact material:	Rhodium
Switch behaviour:	Bistable
Switching capacity:	230 V / 0.5 A / 30 VA
Switching capacity ATEX Exia / Exm:	-
Switching frequency:	1000 / sec.
Switching hysteresis:	-
Actuation distances / Magnets page 203	
Actuation:	Front activated
Design pressure:	0 bar ... 0.5 bar
Design temperature:	-15°C ... +80°C
Ingress protection class:	IP 55
Approvals / Certificates:	ABS / BV / EAC / GL / LR / SIL1

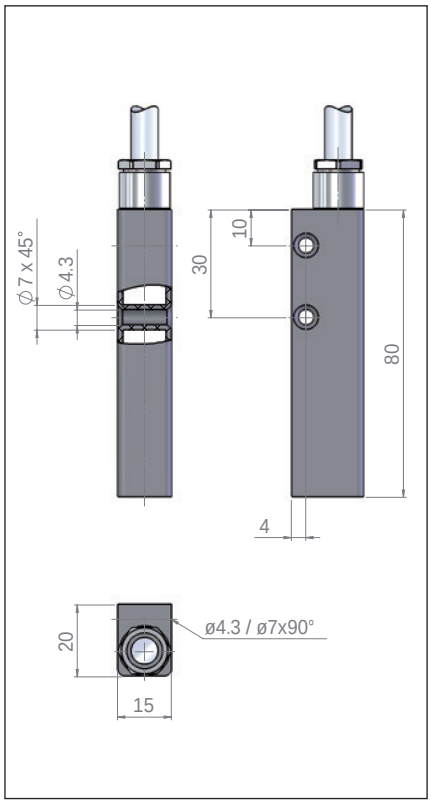

The magnetic switches are based on a modular design and can be conditionally arranged individually.
Type key page 186 - 187

Type **K/PG-16-PE/S/RMO/STB-L60-RU-../PVC**

Material quality:	Polyethylene
Electrical connection:	Connection cable
Ambient temperature	
- with PVC connection cable:	-15°C ... +80°C
- with Silicone connection cable:	-15°C ... +80°C
- with PUR connection cable:	-15°C ... +80°C
Installation connection:	PG 16
Switch function:	Normally open (NO)
Contact material:	Rhodium
Switch behaviour:	Monostable
Switching capacity:	230 V / 1.0 A / 100 VA
Switching capacity ATEX Exia / Exm:	100 mA / NAMUR 60 mA
Switching frequency:	300 / sec.
Switching hysteresis:	ca. 5 mm
Actuation distances / Magnets page 203	
Actuation:	Front activated
Design pressure:	0 bar ... 0.5 bar
Design temperature:	-15°C ... +80°C
Ingress protection class:	IP 55
Approvals / Certificates:	ABS / ATEX / BV / EAC / GL / LR / SIL1

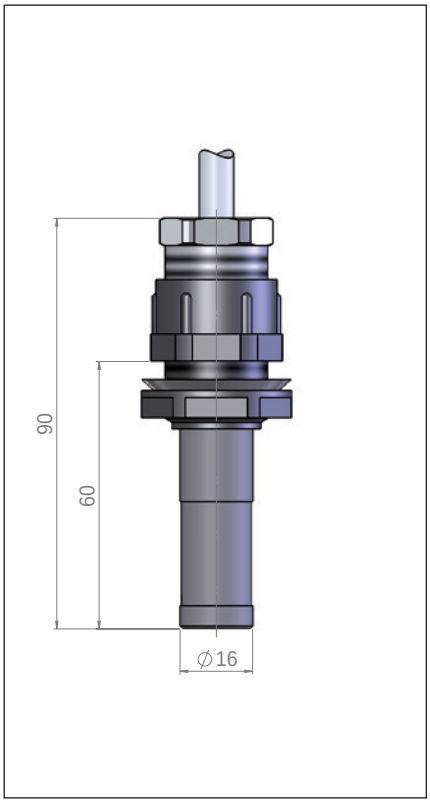

Type **K/PG-16-PE/U/RMO/STB-L60-RU-../PVC**

Material quality:	Polyethylene
Electrical connection:	Connection cable
Ambient temperature	
- with PVC connection cable:	-15°C ... +80°C
- with Silicone connection cable:	-15°C ... +80°C
- with PUR connection cable:	-15°C ... +80°C
Installation connection:	PG 16
Switch function:	Change over (SPDT)
Contact material:	Rhodium
Switch behaviour:	Monostable
Switching capacity:	230 V / 0.5 A / 30 VA
Switching capacity ATEX Exia / Exm:	100 mA / NAMUR 60 mA
Switching frequency:	300 / sec.
Switching hysteresis:	ca. 5 mm
Actuation distances / Magnets page 203	
Actuation:	Front activated
Design pressure:	0 bar ... 0.5 bar
Design temperature:	-15°C ... +80°C
Ingress protection class:	IP 55
Approvals / Certificates:	ABS / ATEX / BV / EAC / GL / LR / SIL1

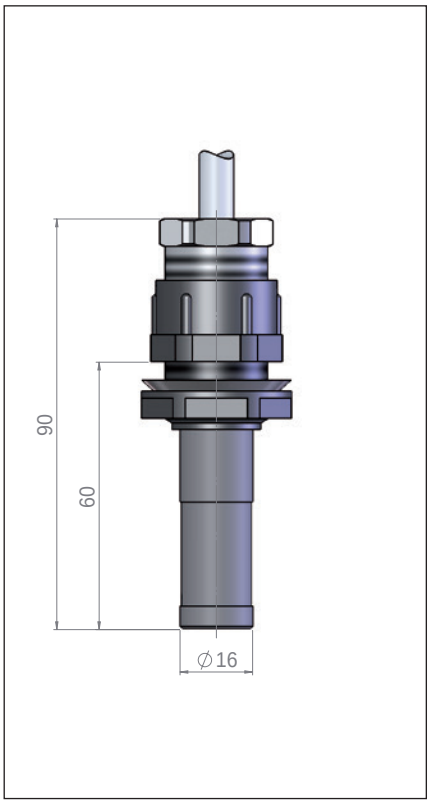

The magnetic switches are based on a modular design and can be conditionally arranged individually.
Type key page 186 - 187

Heinrich Kübler AG
Ruessenstrasse 4 | CH-6340 Baar | Phone +41 (0)41 766 62 62 | Fax +41 (0)41 766 62 63 | E-Mail info@kubler.ch | Internet www.kubler.ch

Type **K/PG-16-PE/U/WMO/STB-L60-RU-../PVC**

Material quality:	Polyethylene
Electrical connection:	Connection cable
Ambient temperature	
- with PVC connection cable:	-15°C ... +80°C
- with Silicone connection cable:	-15°C ... +80°C
- with PUR connection cable:	-15°C ... +80°C
Installation connection:	PG 16

Switch function:	Change over (SPDT)
Contact material:	Wolfram
Switch behaviour:	Monostable
Switching capacity:	230V / 0.5A / 30VA
Switching capacity ATEX Exia / Exm:	100 mA / NAMUR 60 mA
Switching frequency:	100 / sec.
Switching hysteresis:	ca. 1 - 2 mm

Actuation distances / Magnets page 203	
Actuation:	Front activated

Design pressure:	0 bar ... 0.5 bar
Design temperature:	-15°C ... +80°C
Ingress protection class:	IP 55

Approvals / Certificates:	ABS / ATEX / BV / EAC / GL / LR / SIL1

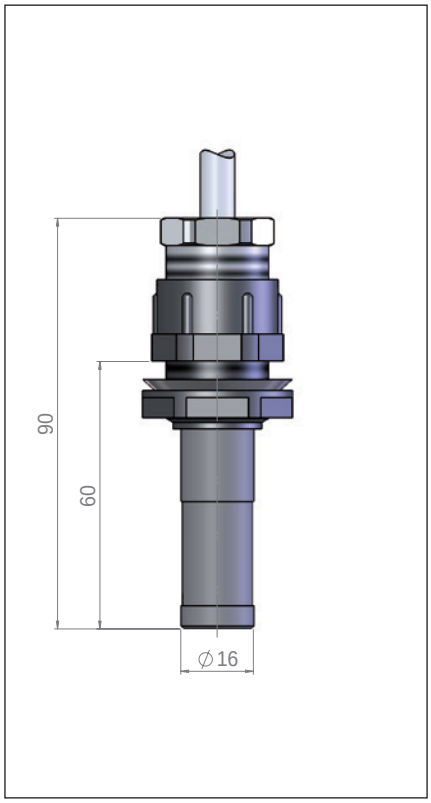

The magnetic switches are based on a modular design and can be conditionally arranged individually.
Type key page 186 - 187

Type	**K/OP-X-AL/S/RMO/STB-L50-RE-../PVC**
Material quality:	Aluminium
Electrical connection:	Connection cable
Ambient temperature	
- with PVC connection cable:	-20°C ... +80°C
- with Silicone connection cable:	-30°C ... +180°C
- with PUR connection cable:	-30°C ... +80°C
Installation connection:	-
Switch function:	Normally open (NO)
Contact material:	Rhodium
Switch behaviour:	Monostable
Switching capacity:	230 V / 1.0 A / 100 VA
Switching capacity ATEX Exia / Exm:	100 mA / NAMUR 60 mA
Switching frequency:	1000 / sec.
Switching hysteresis:	ca. 5 mm
Actuation distances / Magnets page 203	
Actuation:	Front activated
Design pressure:	0 bar ... 0.5 bar
Design temperature:	-30°C ... +80°C
Ingress protection class:	IP 55
Approvals / Certificates:	ABS / ATEX / BV / EAC / GL / LR / SIL1

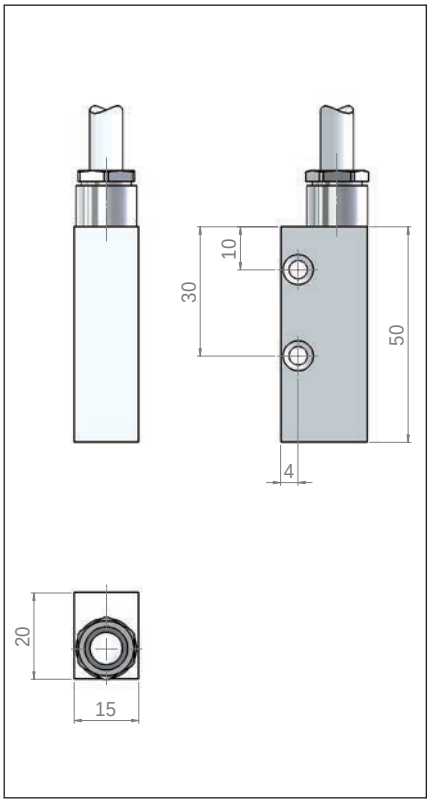

Type	**K/OP-X-AL/S/RBI/STB-L50-RE-../PVC**
Material quality:	Aluminium
Electrical connection:	Connection cable
Ambient temperature	
- with PVC connection cable:	-20°C ... +80°C
- with Silicone connection cable:	-30°C ... +180°C
- with PUR connection cable:	-30°C ... +80°C
Installation connection:	-
Switch function:	Normally open (NO)
Contact material:	Rhodium
Switch behaviour:	Bistable
Switching capacity:	230 V / 1.0 A / 100 VA
Switching capacity ATEX Exia / Exm:	100 mA / NAMUR 60 mA
Switching frequency:	1000 / sec.
Switching hysteresis:	-
Actuation distances / Magnets page 203	
Actuation:	Front activated
Design pressure:	0 bar ... 0.5 bar
Design temperature:	-30°C ... +80°C
Ingress protection class:	IP 55
Approvals / Certificates:	ABS / ATEX / BV / EAC / GL / LR / SIL1

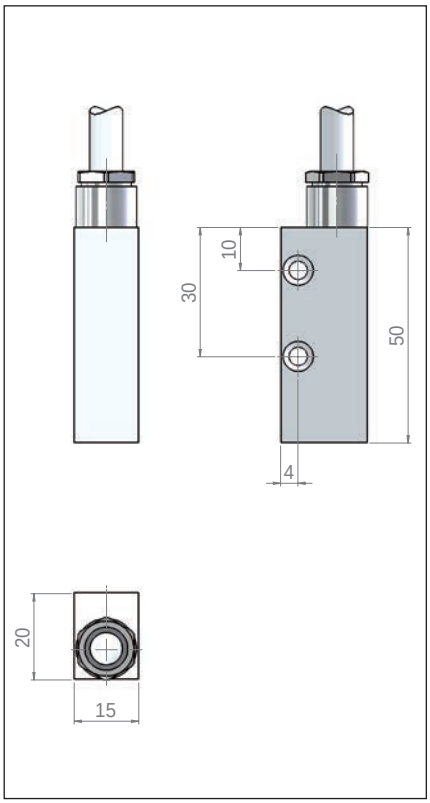

The magnetic switches are based on a modular design and can be conditionally arranged individually.
Type key page 186 - 187

Heinrich Kübler AG
Ruessenstrasse 4 | CH-6340 Baar | Phone +41 (0)41 766 62 62 | Fax +41 (0)41 766 62 63 | E-Mail info@kubler.ch | Internet www.kubler.ch

Magnets

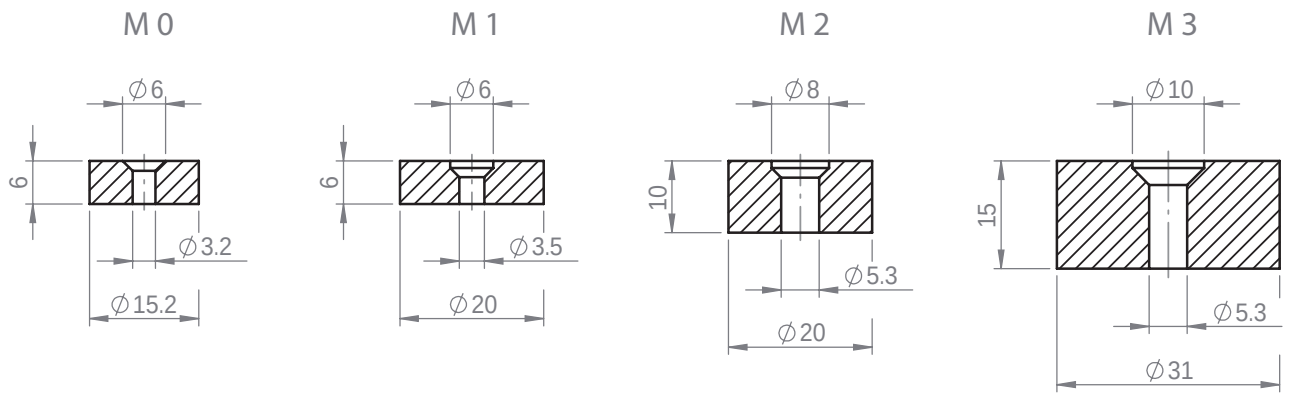

Magnets without plastic cap (wall thickness of the plastic cap ~ 1mm)

Actuation distances

Old type	New type	Page	Magnets			
			M0	M1	M2	M3
				Distances in mm		
EVS-L70	K/E-3/8-V/S/RMO/STB-L70-RU-../PVC	188	~3	~6	~10	~27
EVU-L70	K/E-3/8-V/U/RMO/STB-L70-RU-../PVC	188	~5	~9	~14	~30
EVS-L100	K/E-3/8-V/S/RMO/STB-L100-RU-../PVC	189	~3	~6	~10	~27
EVU-L100	K/E-3/8-V/U/RMO/STB-L100-RU-../PVC	189	~5	~9	~14	~30
MRS10	K/LM-10x1-ME/S/RMO/STB-L40-RU-../PVC	190	~4	~7	~11	~28
MRU10	K/LM-10x1-ME/U/RMO/STB-L40-RU-../PVC	190	~10	~16	~19	~38
MRS12	K/LM-12x1-ME/S/RMO/STB-L70-RU-../PVC	191	~4	~7	~11	~27
MRU12	K/LM-12x1-ME/U/RMO/STB-L70-RU-../PVC	191	~3	~6	~10	~28
MRS9	K/PG-9-PA/S/RMO/STB-L50-RU-../PVC	192	~3	~6	~10	~27
KRS9	K/PG-9-PA/S/RMO/STB-L60-RU-../PVC	192	~3	~6	~10	~27
KRU9	K/PG-9-PA/U/RMO/STB-L60-RU-../PVC	193	~5	~9	~14	~30
KWU9	K/PG-9-PA/U/WMO/STB-L60-RU-../PVC	193	~4	~7	~11	~26
GMS9	K/PG-9-PA/S/RMO/SEB-L80-RU-../PVC	194	~3	~6	~10	~22
GMU9	K/PG-9-PA/U/RMO/SEB-L80-RU-../PVC	194	~3	~5	~8	~19
GMSM16	K/PG-16-PA/S/RBI/STB-L75-RU-../PVC	195	~17	~25	~32	~60
GMUM16	K/PG-16-PA/U/RBI/STB-L75-RU-../PVC	195	~10	~16	~23	~50
GMS18	K/LM-18x1.5-PA/S/RMO/STB-L80-RU-../PVC	196	~6	~10	~15	~35
GMU18	K/LM-18x1.5-PA/U/RMO/STB-L80-RU-../PVC	196	~5	~8	~12	~26
GMUM18	K/LM-18x1.5-PA/U/RBI/STB-L80-RU-../PVC	197	~13	~19	~27	~55
DGS	K/OP-X-PA/S/RMO/SEB-L80-RE-../PVC	197	~3	~5	~9	~21
DRS	K/OP-X-PA/S/RMO/STB-L80-RE-../PVC	198	~5	~7	~11	~27
DRU	K/OP-X-PA/U/RMO/STB-L80-RE-../PVC	198	~3	~5	~9	~17
DRSM	K/OP-X-PA/S/RBI/STB-L80-RE-../PVC	199	~14	~20	~28	~58
DRUM	K/OP-X-PA/U/RBI/STB-L80-RE-../PVC	199	~8	~15	~20	~45
KRS16	K/PG-16-PE/S/RMO/STB-L60-RU-../PVC	200	~4	~7	~11	~27
KRU16	K/PG-16-PE/U/RMO/STB-L60-RU-../PVC	200	~4	~6	~11	~27
KWU16	K/PG-16-PE/U/WMO/STB-L60-RU-../PVC	201	~4	~6	~10	~28
FKS-AL	K/OP-X-AL/S/RMO/STB-L50-RE-../PVC	202	~4	~7	~11	~27
FKSM-AL	K/OP-X-AL/S/RBI/STB-L50-RE-../PVC	202	~17	~24	~30	~55

The magnetic switches are based on a modular design and can be conditionally arranged individually.
Type key page 186 - 187

Recording and controlling of fluid levels

Food industry

Machine & plant engineering

Shipbuilding

Chemical plants

Water treatment

Pharmaceutical industry

Air-conditioning technology

Oil rigs

Oil refineries

1009

SUSPENDED FLOAT SWITCHES

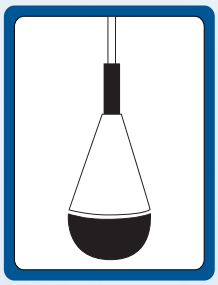

Table of content

Suspended Float Switches / Content 206
Suspended Float Switches / Type key 207
Suspended Float Switches 208
Suspended Float Switches 209

Heinrich Kübler AG
Ruessenstrasse 4 | CH-6341 Baar | Phone +41 (0)41 766 62 62 | Fax +41 (0)41 766 62 63 | E-Mail info@kubler.ch | Internet www.kubler.ch

Code 1

	Key 1 ... - **Form of housing**
MS1	Housing 180.0 x 100.0 mm
MS1C	Housing 180.0 x 100.0 mm
M2	Housing 90.0 x 60.0 mm
M2G	Housing 90.0 x 60.0 mm with cable weight

Code 2

	Key 1 ... / ... - **Length of cable**		Key 2 ... / ... - **Connection cable**
5	5 m	TPK	TPK (Thermoplastic rubber)
10	10 m	TEF	Teflon (only MS1C)
20	20 m		
30	30 m		
40	40 m		
50	50 m		

Code 3

	Key 1 ... - **Approvals / 1**
EXIAG	Acc. to Exia, atmosphere gas

Example

Code	1		2				3
Key	1	-	1	/	2	-	1
Example	MS1	-	5	/	TPK	-	EXIAG

Black = not possible according to Atex / Blue = possible according to Atex Exia / Blue[1] = possible according to Atex Exia and Exd / Black[1] = possible according to Atex Exd

Type	MS1-../TPK
Material quality:	Polypropylene
Housing colour:	Orange
Dimensions:	180 x 100 mm
Electrical connection:	Connection cable
Cable quality:	TPK Thermoplastic rubber
Cable colour:	Orange
Wire cross section::	3.0 x 0.75 mm²
Length of cable:	5 m / 10 m / 20 m / 30 m / 40 m / 50 m
Switch function:	Change over (SPDT)
Switching capacity:	250 V / 5.0 A
Switch point:	10°
Specific gravity:	950 ... 1050 kg/m³
Design pressure:	0 bar ... 2 bar
Design temperature:	0°C ... 80°C
Ingress protection class:	IP 68
Approvals / Certificates:	-

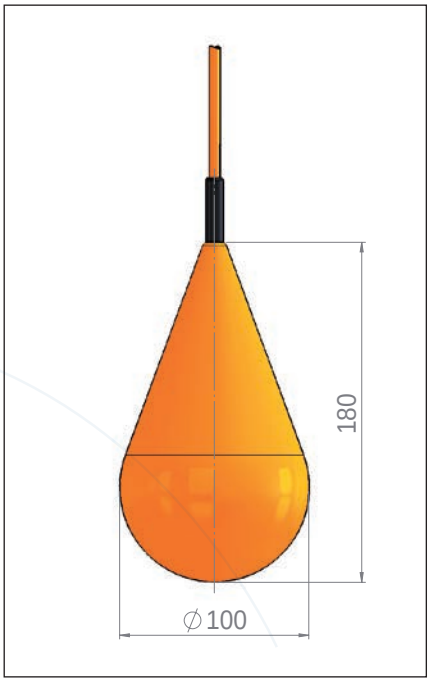

Type	MS1-../TPK-Ex
Material quality:	Polypropylene conductive
Housing colour:	Black
Dimensions:	180 x 100 mm
Electrical connection:	Connection cable
Cable quality:	TPK conductive Thermoplastic rubber
Cable colour:	Blue
Wire cross section::	4G0.75 mm²
Length of cable:	5 m / 10 m / 20 m / 30 m / 40 m / 50 m
Switch function:	Change over (SPDT)
Switching capacity:	40 V / 100 mA
Switch point:	10°
Specific gravity:	950 ... 1050 kg/m³
Design pressure:	0 bar ... 2 bar
Design temperature:	0°C ... 80°C
Ingress protection class:	IP 68
Approvals / Certificates:	ATEX II 1G Ex ia IIC T6

Type key page 207

Heinrich Kübler AG
Ruessenstrasse 4 | CH-6341 Baar | Phone +41 (0)41 766 62 62 | Fax +41 (0)41 766 62 63 | E-Mail info@kubler.ch | Internet www.kubler.ch

Type	MS1C-../TEF
Material quality:	Polypropylene
Housing colour:	Grey
Dimensions:	180 x 100 mm
Electrical connection:	Connection cable
Cable quality:	Teflon
Cable colour:	Black
Wire cross section::	4G0.75 mm²
Length of cable:	5 m / 10 m / 20 m / 30 m / 40 m / 50 m
Switch function:	Change over (SPDT)
Switching capacity:	250 V / 5.0 A
Switch point:	10°
Specific gravity:	950 ... 1050 kg/m³
Design pressure:	0 bar ... 2 bar
Design temperature:	0°C ... 100°C
Ingress protection class:	IP 68
Approvals / Certificates:	-

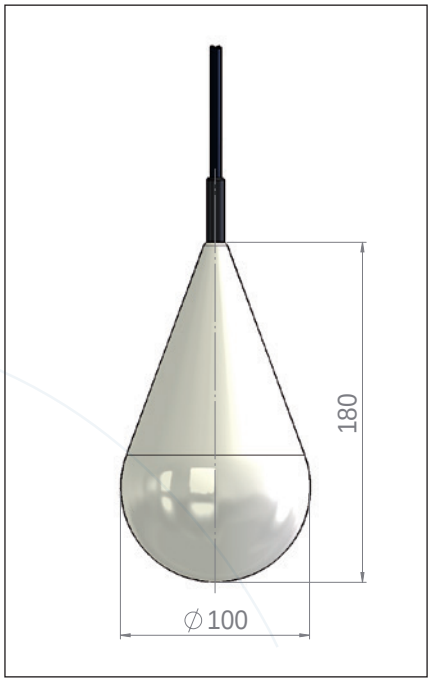

Type	M2-../TPK / M2G-../TPK (with cable weight 300 g)
Material quality:	Polypropylene
Housing colour:	Orange
Dimensions:	90 x 60 mm
Electrical connection:	Connection cable
Cable quality:	TPK Thermoplastic rubber
Cable colour:	Orange
Wire cross section::	3.0 x 0.5 mm²
Length of cable:	5 m / 10 m / 20 m / 30 m / 40 m / 50 m
Switch function:	Change over (SPDT)
Switching capacity:	250 V / 2.0 A
Switch point:	10°
Specific gravity:	950 ... 1050 kg/m³
Design pressure:	0 bar ... 2 bar
Design temperature:	0°C ... 80°C
Ingress protection class:	IP 68
Approvals / Certificates:	-

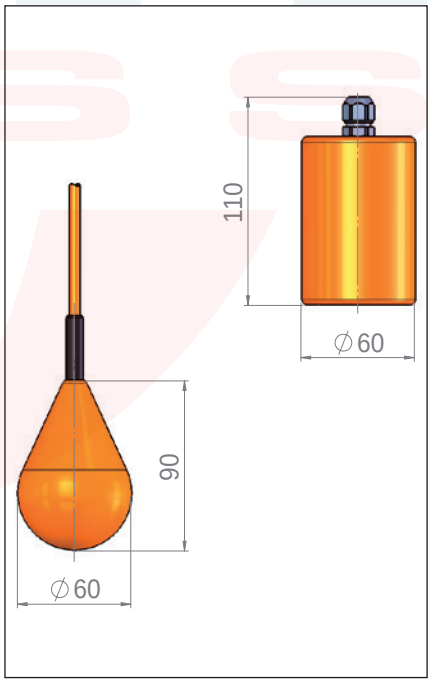

Type key page 207

Control unit / Display / Contact protection relay / Repeater

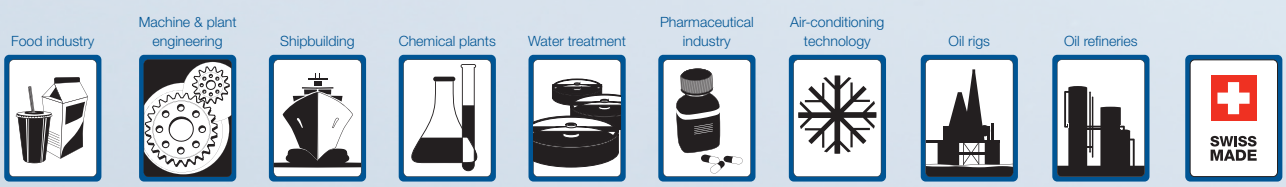

1011

CONTROL UNITS

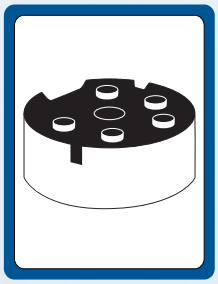

Table of content

Control Units / Content 212
Control Units / Type key 213
Control Units / Control unit MULD 214
Control Units / Control unit MULE 215
Control Units / Control unit TP5333.. 216
Control Units / Control unit TP5343.. 217
Control Units / Control unit TD5335 218
Control Units / Control unit TP5350..F 219
Control Units / Control unit TP5350..P 220
Control Units / Control unit ZMU / TMT181 221
Control Units / Repeater 5104BB2.. 222
Control Units / Repeater 5106BB2.. 223
Control Units / LED display 5714D / 5715D 224
Control Units / LCD display 5531B.. 225
Control Units / Contact protection relay 5202B 226
Control Units / Analogue display A../ 227
Control Units / Leckage detector GL 228
Control Units / Floor electrode 229
Control Units / Conductive level controller 7201 230
Control Units 231

Heinrich Kübler AG
Ruessenstrasse 4 | CH-6341 Baar | Phone +41 (0)41 766 62 62 | Fax +41 (0)41 766 62 63 | E-Mail info@kubler.ch | Internet www.kubler.ch

Code 1

	Key 1 ... **Control units**
MUL-D2	Control unit with LED display MUL-D2
MUL-D4	Control unit with LED display MUL-D4
MUL-E2	Control unit with LED display MUL-E2
MUL-E4	Control unit with LED display MUL-E4
TP5333A	Control unit TP5333A
TP5333D	Control unit TP5333D
TP5343A	Control unit TP5343A
TP5343B	Control unit TP5343B
TD5335A	Control unit TD5335A
TD5335D	Control unit TD5335D
TP5350AF	Control unit TP5350AF
TP5350BF	Control unit TP5350BF
TP5350AP	Control unit TP5350AP
TP5350BP	Control unit TP5350BP
ZMU	Control unit XT42Si
TMT181A	Control unit TMT181A
TMT181B	Control unit TMT181B Ex
5104BB2A	Repeater 5104BB2A
5104BB2B	Repeater 5104BB2B
5106B2A	Repeater 5106B2A
5106B2B	Repeater 5106B2B
5714D	LED display 5714D
5715D	LED display 5715D
5531B	LCD display 5531B
5531B2	LCD display in field frame 5531B2
5202B2	Contact protection relay 5202B2
5202B4	Contact protection relay 5202B4
GL1002	Leckage detector GL1002
GL1003	Leckage detector GL1003
GL1101	Leckage detector GL1101
FE	Floor electrode FE
AFE	Floor electrode AFE
72011S	Conductive level controller 72011S
72012S	Conductive level controller 72012S
72013S	Conductive level controller 72013S
72013E	Conductive level controller 72013E

Code 1 (only analogue display)

	Key 1 ... / ... / ... / ... - **Analogue display**		Key 2 ... / ... / ... / ... - **Indication angle**		Key 3 ... / ... / ... / ... - **Current input**
A48	Analogue display 48.0 x 48.0 mm	90	Indication angle 90°	I100	0.0 ... 100.0 µA
A72	Analogue display 72.0 x 72.0 mm	240	Indication angle 240°	I020	0.0 ... 20.0 mA
A96	Analogue display 96.0 x 96.0 mm			I420	4.0 ... 20.0 mA
A144	Analogue display 144.0 x 144.0 mm				

Code 1 (only analogue display)

	Key 4 ... / ... / ... / ... - **Scaling**
0100	0 ... 100%
0000	Scale according to customers information

Example

Code			1				
Key	1	/	2	/	3	/	4
Example	A96	/	90	/	I420	/	0100

Black = not possible according to Atex / Blue = possible according to Atex Exia / Blue[1] = possible according to Atex Exia and Exd / Black[1] = possible according to Atex Exd

Type	MULD2..	MULD4..
Power supply:	MULD21 18 ... 36 VDC MULD22 115 VAC MULD23 230 VAC	MULD41 18 ... 36 VDC MULD42 115 VAC MULD43 230 VAC
Current input:	-	-
Current output:	0 … 20 mA / 4 … 20 mA	0 … 20 mA / 4 … 20 mA
Error alarm:	Yes (only for 4 … 20 mA)	Yes (only for 4 … 20 mA)
Input signal:	3-wire potentiometer 1 kOhm ... 100 kOhm	3-wire potentiometer 1 kOhm ... 100 kOhm
Measuring channels:	1	1
Relay outputs:	2 Relays / Normally open (NO) / Programmable 230 VAC / 2 A / 500 VA	4 Relays / Normally open (NO) / Programmable 230 VAC / 2 A / 500 VA
Dimensions:	W 45.0 x H 75.0 x D 110.0 mm	W 55.0 x H 75.0 x D 110.0 mm
Mounting dimensions:	-	-
Ambient temperature:	0°C ... 55°C	0°C ... 55°C
Atmospheric humidity:	< 95 % RH (not condensed)	< 95 % RH (not condensed)
Weight:	325 g	345 g
Ingress protection class (Housing / Connections):	IP 40 / IP 20	IP 40 / IP 20
Display:	4-digit 7-segment LED display in red Size 7.6 mm Free scaling	4-digit 7-segment LED display in red Size 7.6 mm Free scaling
EMV 2004/108/EG:	EN 61000-6-2 / EN 61000-6-3 EN 61000-4-2 EN 61000-4-3 EN 61000-4-6 EN 61000-4-13	EN 61000-6-2 / EN 61000-6-3 EN 61000-4-2 EN 61000-4-3 EN 61000-4-6 EN 61000-4-13
Programming:	Programming buttons	Programming buttons
Alignment:	Free programmable	Free programmable
Approvals / Certificates:	BV / GL	BV / GL

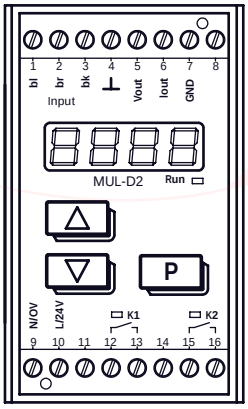

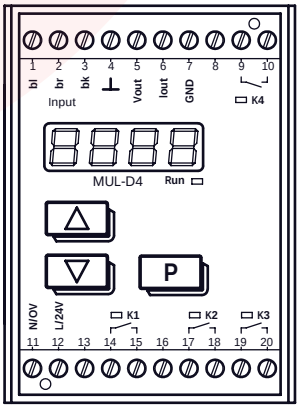

Type key page 213

Heinrich Kübler AG
Ruessenstrasse 4 | CH-6341 Baar | Phone +41 (0)41 766 62 62 | Fax +41 (0)41 766 62 63 | E-Mail info@kubler.ch | Internet www.kubler.ch

Type	MULE2..	MULE4..
Power supply:	MULE21 18 ... 36 VDC MULE22 115 VAC MULE23 230 VAC	MULE41 18 ... 36 VDC MULE42 115 VAC MULE43 230 VAC
Current input:	-	-
Current output:	0 … 20 mA / 4 … 20 mA	0 … 20 mA / 4 … 20 mA
Error alarm:	Yes (only for 4 … 20 mA)	Yes (only for 4 … 20 mA)
Input signal:	3-wire potentiometer 1 kOhm ... 100 kOhm	3-wire potentiometer 1 kOhm ... 100 kOhm
Measuring channels:	1	1
Relay outputs / Display:	2 Relays / Normally open (NO) / Programmable 230 VAC / 2 A / 500 VA	4 Relays / Normally open (NO) / Programmable 230 VAC / 2 A / 500 VA
Dimensions:	W 45.0 x H 75.0 x D 110.0 mm	W 55.0 x H 75.0 x D 110.0 mm
Mounting dimensions:	-	-
Ambient temperature:	0°C ... 55°C	0°C ... 55°C
Atmospheric humidity:	< 95 % RH (not condensed)	< 95 % RH (not condensed)
Weight:	325 g	345 g
Ingress protection class (Housing / Connections):	IP 40 / IP 20	IP 40 / IP 20
Display:	4-digit 7-segment LED display in red Size 7.6 mm Free scaling	4-digit 7-segment LED display in red Size 7.6 mm Free scaling
EMV 2004/108/EG:	EN 61000-6-2 / EN 61000-6-3 EN 61000-4-2 EN 61000-4-3 EN 61000-4-6 EN 61000-4-13	EN 61000-6-2 / EN 61000-6-3 EN 61000-4-2 EN 61000-4-3 EN 61000-4-6 EN 61000-4-13
Programming:	Programming buttons	Programming buttons
Alignment:	Free programmable Linearisable	Free programmable Linearisable
Approvals / Certificates:	BV / GL	BV / GL

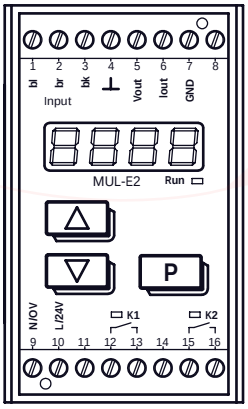

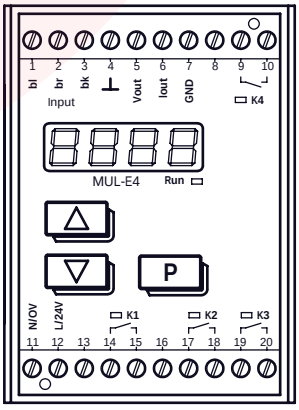

Type key page 213

Type	TP5333A	TP5333D
Power supply:	8.0 ... 35 VDC	8.0 ... 30 VDC
Current input:	-	-
Current output:	4 … 20 mA	4 … 20 mA
Error alarm:	3.5 ... 23 mA programmable	3.5 ... 23 mA programmable (NAMUR NE 43)
Input signal:	PT-100 (-200°C ... 850°C) PT-1000 (-200°C ... 850°C)	PT-100 (-200°C ... 850°C) PT-1000 (-200°C ... 850°C)
Measuring channels:	1	1
Relay outputs:	-	-
Dimensions:	ø 44.0 x 20.2 mm	ø 44.0 x 20.2 mm
Mounting dimensions:	-	-
Ambient temperature:	-40°C ... 85°C	-40°C ... 85°C
Atmospheric humidity:	< 95 % RH (not condensed)	< 95 % RH (not condensed)
Weight:	50 g	50 g
Ingress protection class (Housing / Connections):	IP 68 / IP 00	IP 68 / IP 00
Intrinsically safe data:	-	$U_i \leq$ 30 VDC $I_i \leq$ 120 mA $P_i \leq$ 0.84 W $L_i \leq$ 10 µH $C_i \leq$ 1nF
EMV 2004/108/EG:	EN 61326-1	EN 61326-1
ATEX 94/9/EG:	-	EN 60079-0, -11, -26 EN 61241-0, -11
Programming:	Loop Link 5905 (RS232) / 5909 (USB)	Loop Link 5905 (RS232) / 5909 (USB)
Alignment:	Free programmable	Free programmable
Approvals / Certificates:	DNV-GL / EAC / IECEX / INMETRO	ATEX / CSA / DNV-GL / EAC / FM / IECEX / INMETRO

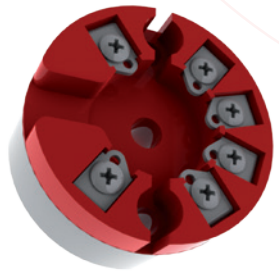

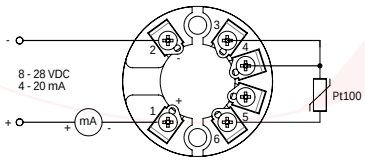

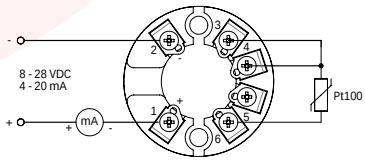

Type key page 213

Heinrich Kübler AG
Ruessenstrasse 4 | CH-6341 Baar | Phone +41 (0)41 766 62 62 | Fax +41 (0)41 766 62 63 | E-Mail info@kubler.ch | Internet www.kubler.ch

Type	TP5343A	TP5343B Ex
Power supply:	8.0 ... 35 VDC	8.0 ... 30 VDC
Current input:	-	-
Current output:	4 ... 20 mA	4 ... 20 mA
Error alarm:	3.5 ... 23 mA programmable	3.5 ... 23 mA programmable (NAMUR NE 43)
Input signal:	3-wire potentiometer 1 kOhm ... 100 kOhm	3-wire potentiometer 1 kOhm ... 100 kOhm
Measuring channels:	1	1
Relay outputs:	-	-
Dimensions:	ø 44.0 x 20.2 mm	ø 44.0 x 20.2 mm
Mounting dimensions:	-	-
Ambient temperature:	-40°C ... 85°C	-40°C ... 85°C
Atmospheric humidity:	< 95 % RH (not condensed)	< 95 % RH (not condensed)
Weight:	50 g	50 g
Ingress protection class (Housing / Connections):	IP 68 / IP 00	IP 68 / IP 00
Intrinsically safe data:	-	$U_i \leq 30$ VDC $I_i \leq 120$ mA $P_i \leq 0.84$ W $L_i \leq 10$ µH $C_i \leq 1$nF
EMV 2004/108/EG:	EN 61326-1	EN 61326-1
ATEX 94/9/EG:	-	EN 60079-0, -11, -26 EN 61241-0, -11
Programming:	Loop Link 5905 (RS232) / 5909 (USB)	Loop Link 5905 (RS232) / 5909 (USB)
Alignment:	Free programmable Linearisable	Free programmable Linearisable
Approvals / Certificates:	DNV-GL / EAC / IECEX / INMETRO	ATEX / DNV-GL / EAC / FM / IECEX / INMETRO

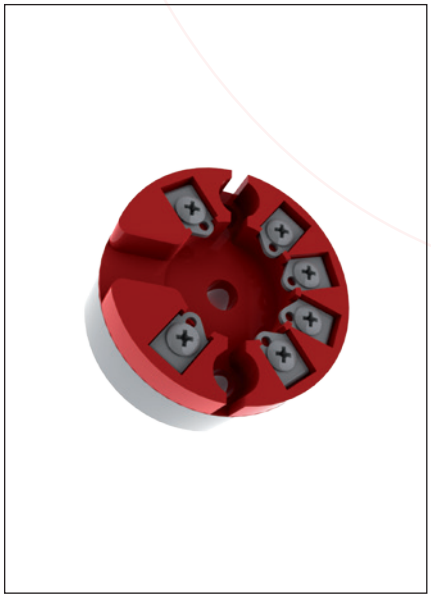

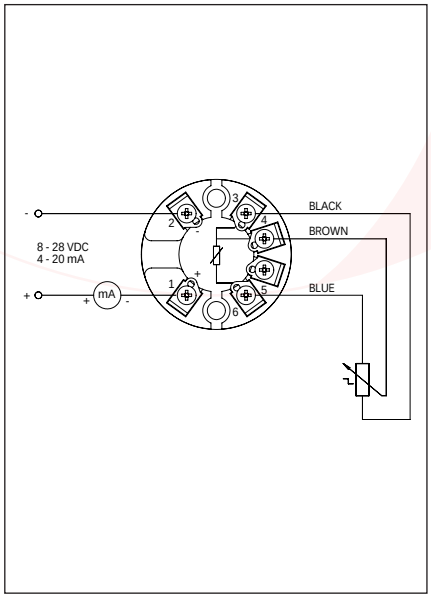

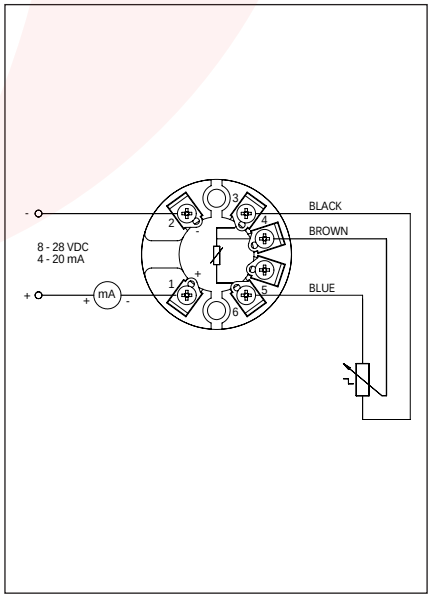

Type key page 213

Type	TD5335A	TD5335D
Power supply:	8.0 ... 35 VDC	8.0 ... 30 VDC
HART®-Communication:	Yes	Yes
Current output:	4 … 20 mA	4 … 20 mA
Error alarm:	3.5 ... 23 mA programmable	3.5 ... 23 mA programmable (NAMUR NE 43)
Input signal:	PT-100 (-200°C ... 850°C) PT-1000 (-200°C ... 850°C) Linear 0 Ohm ... 7 kOhm	PT-100 (-200°C ... 850°C) PT-1000 (-200°C ... 850°C) Linear 0 Ohm ... 7 kOhm
Measuring channels:	1	1
Relay outputs:	-	-
Dimensions:	ø 44.0 x 20.2 mm	ø 44.0 x 20.2 mm
Mounting dimensions:	-	-
Ambient temperature:	-40°C ... 85°C	-40°C ... 85°C
Atmospheric humidity:	< 95 % RH (not condensed)	< 95 % RH (not condensed)
Weight:	50 g	50 g
Ingress protection class (Housing / Connections):	IP 68 / IP 00	IP 68 / IP 00
Intrinsically safe data:	-	$U_i \leq$ 30 VDC $I_i \leq$ 120 mA $P_i \leq$ 0.84 W $L_i \leq$ 10 µH $C_i \leq$ 1nF
EMV 2004/108/EG:	EN 61326-1	EN 61326-1
ATEX 94/9/EG:	-	EN 60079-0, -11, -26 EN 61241-0, -11
Programming:	Loop Link 5905 (RS232) / 5909 (USB) Hart®Modem	Loop Link 5905 (RS232) / 5909 (USB) Hart®Modem
Alignment:	Free programmable Linearisable	Free programmable Linearisable
Approvals / Certificates:	DNV-GL / EAC / IECEX / INMETRO / SIL2	ATEX / CSA / DNV-GL / EAC / FM / IECEX / INMETRO / SIL2

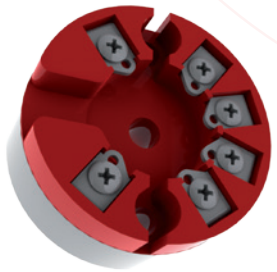

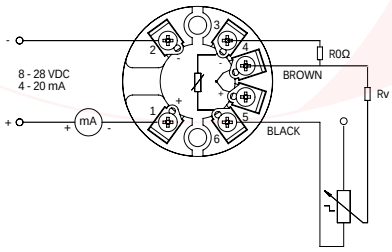

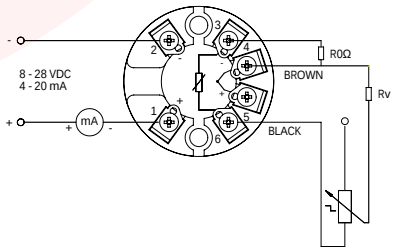

Type key page 213

Heinrich Kübler AG
Ruessenstrasse 4 | CH-6341 Baar | Phone +41 (0)41 766 62 62 | Fax +41 (0)41 766 62 63 | E-Mail info@kubler.ch | Internet www.kubler.ch

Type	TP5350AF	TP5350BF
Power supply:	9.0 ... 32 VDC	9.0 ... 30 VDC
Current input:	-	-
Output signal:	Foundation™ Fieldbus ITK4.51	Foundation™ Fieldbus ITK4.51
Error alarm:	Yes	Yes
Input signal:	PT-100 (-200°C ... 850°C) PT-1000 (-200°C ... 850°C) 3-wire potentiometer 0 Ohm ... 100 kOhm	PT-100 (-200°C ... 850°C) PT-1000 (-200°C ... 850°C) 3-wire potentiometer 0 Ohm ... 100 kOhm
Measuring channels:	1	1
Relay outputs:	-	-
Dimensions:	ø 44.0 x 20.2 mm	ø 44.0 x 20.2 mm
Mounting dimensions:	-	-
Ambient temperature:	-40°C ... 85°C	-40°C ... 85°C
Atmospheric humidity:	< 95 % RH (not condensed)	< 95 % RH (not condensed)
Weight:	55 g	55 g
Ingress protection class (Housing / Connections):	IP 68 / IP 00	IP 68 / IP 00
Intrinsically safe data:	-	$U_i \leq 30$ VDC $I_i \leq 120$ mA $P_i \leq 0.84$ W $L_i \leq 1$ µH $C_i \leq 2$ nF
EMV 2004/108/EG:	EN 61326-1	EN 61326-1
ATEX 94/9/EG:	-	EN 60079-0, -11, -26, -27 EN 61241-0, -11
Programming:	Siemens Simatic PDM ABB Melody / Honeywell AX Metso Damatec XD	Siemens Simatic PDM ABB Melody / Honeywell AX Metso Damatec XD
Alignment:	Free programmable Linearisable	Free programmable Linearisable
Approvals / Certificates:	CSA / EAC / FM / NEPSI	ATEX / CSA / EAC / FM / IECEX / INMETRO / NEPSI

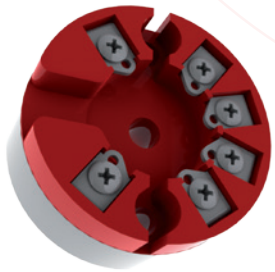

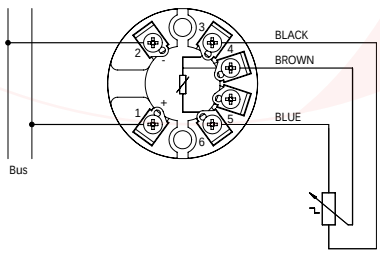

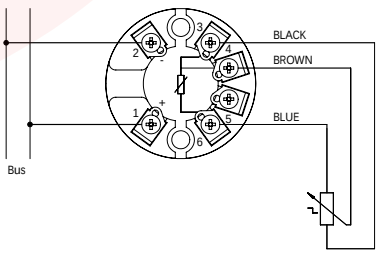

Type key page 213

Type	TP5350AP	TP5350BP
Power supply:	9.0 ... 32 VDC	9.0 ... 30 VDC
Current input:	-	-
Output signal:	Profibus® PA	Profibus® PA
Error alarm:	Yes	Yes
Input signal:	PT-100 (-200°C ... 850°C) PT-1000 (-200°C ... 850°C) 3-wire potentiometer 0 Ohm ... 100 kOhm	PT-100 (-200°C ... 850°C) PT-1000 (-200°C ... 850°C) 3-wire potentiometer 0 Ohm ... 100 kOhm
Measuring channels:	1	1
Relay outputs:	-	-
Dimensions:	ø 44.0 x 20.2 mm	ø 44.0 x 20.2 mm
Mounting dimensions:	-	-
Ambient temperature:	-40°C ... 85°C	-40°C ... 85°C
Atmospheric humidity:	< 95 % RH (not condensed)	< 95 % RH (not condensed)
Weight:	55 g	55 g
Ingress protection class (Housing / Connections):	IP 68 / IP 00	IP 68 / IP 00
Intrinsically safe data:	-	$U_i \leq 30$ VDC $I_i \leq 120$ mA $P_i \leq 0.84$ W $L_i \leq 1$ µH $C_i \leq 2$ nF
EMV 2004/108/EG:	EN 61326-1	EN 61326-1
ATEX 94/9/EG:	-	EN 60079-0, -11, -26, -27 EN 61241-0, -11
Programming:	Siemens Simatic PDM ABB Melody / Honeywell AX Metso Damatec XD	Siemens Simatic PDM ABB Melody / Honeywell AX Metso Damatec XD
Alignment:	Free programmable Linearisable	Free programmable Linearisable
Approvals / Certificates:	CSA / EAC / FM / NEPSI	ATEX / CSA / EAC / FM / IECEX / INMETRO / NEPSI

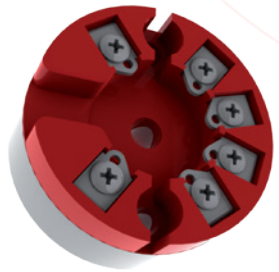

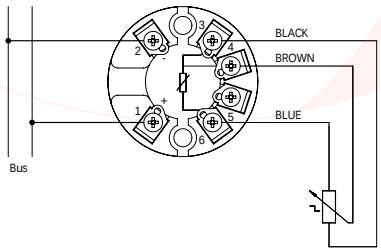

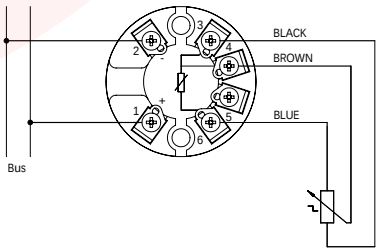

Type key page 213

Heinrich Kübler AG
Ruessenstrasse 4 | CH-6341 Baar | Phone +41 (0)41 766 62 62 | Fax +41 (0)41 766 62 63 | E-Mail info@kubler.ch | Internet www.kubler.ch

Type	ZMU	TMT181A / TMT181B (Ex)
Power supply:	12 ... 30 VDC	8.0 ... 35 VDC / 8.0 ... 30 VDC (Ex)
Current input:	-	-
Current output:	4 ... 20 mA	4 ... 20 mA
Error alarm:	3.8 ... 22 mA	≤ 3,6 mA oder ≥ 21,0 mA programmable
Input signal:	3-wire potentiometer 1kOhm ... 100kOhm	PT-100 (-200°C ... 850°C) PT-1000 (-200°C ... 250°C) Linear 10 Ohm ... 2000 Ohm
Measuring channels:	1	1
Relay outputs:	-	-
Dimensions:	ø 44.0 x 20.2 mm	ø 44.0 x 22.5 mm
Mounting dimensions:	-	-
Ambient temperature:	-20°C ... 65°C	-40°C ... 85°C
Atmospheric humidity:	< 95 % RH (not condensed)	< 95 % RH (not condensed)
Weight:	40 g	40 g
Ingress protection class (Housing / Connections):	IP 20 / IP 00	IP 66 / IP 00
Intrinsically safe data:	U_i ≤ 30 VDC I_i ≤ 101 mA P_i ≤ 0.758 W L_i = 0 µH C_i = 0 nF	U_i ≤ 30 VDC I_i ≤ 100 mA L_i = insignificant C_i = insignificant
EMV 2004/108/EG:	EN 61326-1	EN 61010-1
ATEX 94/9/EG:	EN 60079-0, -11 EN 61241-0, -11	EN 61326-1, -2-3 EN 60079-0, -15 EN 61241-0, -1, -11
Programming:	0% and 100% alignment	Configuration kit TMT181A-VK
Alignment:	0% ± 5% 100% - 25%	0% and 100%
Approvals / Certificates:	ABS / ATEX / BV / DNV / GL	ATEX / CSA / EAC / FM / GL / NEPSI / RUSSIAN / UL

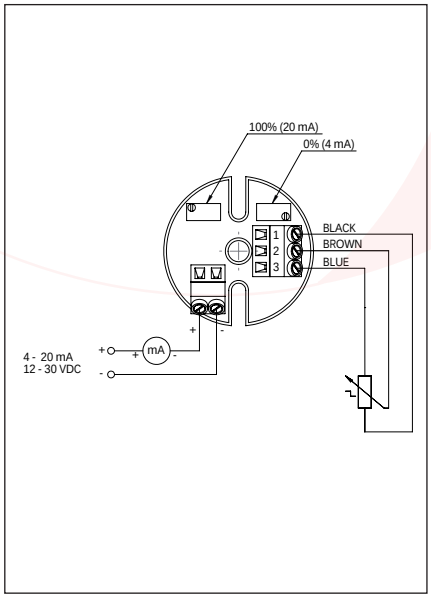

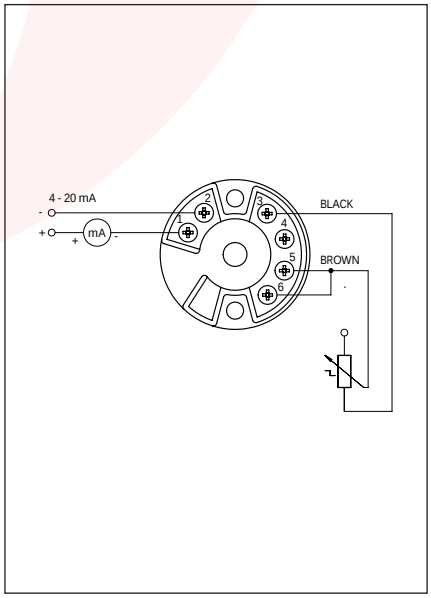

Type key page 213

Type	5104BB2A	5104BB2B
Power supply:	22 ... 250 V AC / DC	22 ... 250 V AC / DC
Current input:	4 ... 20 mA	4 ... 20 mA
Current output:	4 ... 20 mA	4 ... 20 mA
Error alarm:	-	-
Input signal:	-	-
Measuring channels:	1	2
Relay outputs:	-	-
Dimensions:	W 23.5 x H 109.0 x D 130.0 mm	W 23.5 x H 109.0 x D 130.0 mm
Mounting dimensions:	-	-
Ambient temperature:	-20°C ... 60°C	-20°C ... 60°C
Atmospheric humidity:	< 95 % RH (not condensed)	< 95 % RH (not condensed)
Weight:	225 g	225 g
Ingress protection class (Housing / Connections):	IP 20	IP 20
Burden:	U_m 250 V U_o 28.0 VDC I_o 93 mA P_o 0.65 W L_o 3 mH C_o 80 nF	U_m 250 V U_o 28.0 VDC I_o 93 mA P_o 0.65 W L_o 3 mH C_o 80 nF
EMV 2004/108/EG: ATEX 94/9/EG:	EN 61326-1 EN 50014 EN 50020 EN 50281-1-1	EN 61326-1 EN 50014 EN 50020 EN 50281-1-1
Programming:	Loop Link 5905 (RS232) / 5909 (USB)	Loop Link 5905 (RS232) / 5909 (USB)
Alignment:	-	-
Approvals / Certificates:	ATEX / DNV-GL / EAC / UL	ATEX / DNV-GL / EAC / UL

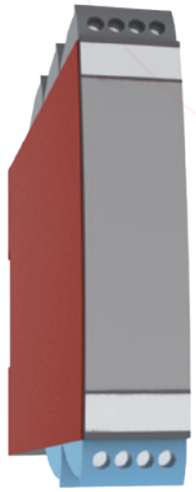

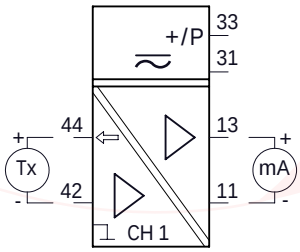

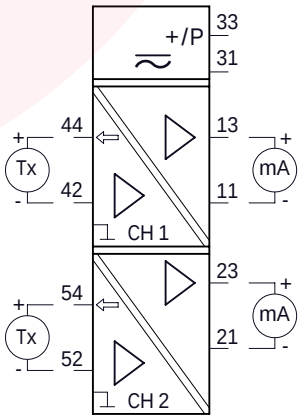

Type key page 213

Heinrich Kübler AG
Ruessenstrasse 4 | CH-6341 Baar | Phone +41 (0)41 766 62 62 | Fax +41 (0)41 766 62 63 | E-Mail info@kubler.ch | Internet www.kubler.ch

Type	5106BB2A	5106BB2B
Power supply:	22 ... 250 V AC / DC	22 ... 250 V AC / DC
Current input:	4 ... 20 mA	4 ... 20 mA
Current output:	4 ... 20 mA	4 ... 20 mA
Error alarm:	-	-
HART®-Communication:	Yes	Yes
Measuring channels:	1	2
Relay outputs:	-	-
Dimensions:	W 23.5 x H 109.0 x D 130.0 mm	W 23.5 x H 109.0 x D 130.0 mm
Mounting dimensions:	-	-
Ambient temperature:	-20°C ... 60°C	-20°C ... 60°C
Atmospheric humidity:	< 95 % RH (not condensed)	< 95 % RH (not condensed)
Weight:	246 g	246 g
Ingress protection class (Housing / Connections):	IP 20	IP 20
Burden:	U_m 250 V U_o 28.0 VDC I_o 93 mA P_o 0.65 W L_o 3 mH C_o 80 nF	U_m 250 V U_o 28.0 VDC I_o 93 mA P_o 0.65 W L_o 3 mH C_o 80 nF
EMV 2004/108/EG: ATEX 94/9/EG:	EN 61326-1 EN 50014 EN 50020 EN 50281-1-1	EN 61326-1 EN 50014 EN 50020 EN 50281-1-1
Programming:	Loop Link 5905 (RS232) / 5909 (USB) Hart®Modem	Loop Link 5905 (RS232) / 5909 (USB) Hart®Modem
Alignment:	-	-
Approvals / Certificates:	ATEX / EAC / UL	ATEX / EAC / UL

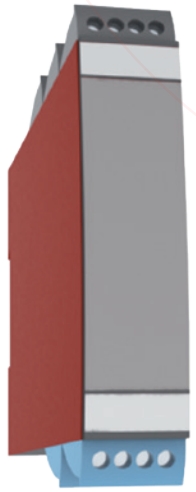

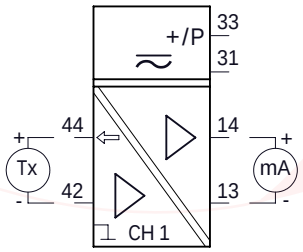

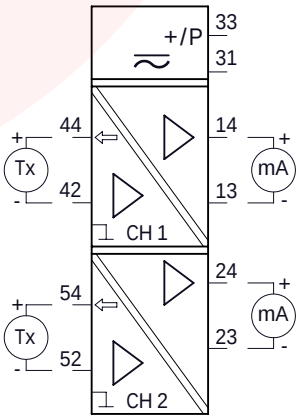

Type key page 213

Type	5714D	5715D
Power supply:	22 ... 250 V AC / DC	22 ... 250 V AC / DC
Current input:	-	-
Current output:	0 … 20 mA / 4 … 20 mA	0 … 20 mA / 4 … 20 mA
Error alarm:	-	-
Input signal:	PT-100 (-200°C ... 850°C) 3-wire potentiometer 10 Ohm ... 100 kOhm	PT-100 (-200°C ... 850°C) 3-wire potentiometer 10 Ohm ... 100 kOhm
Measuring channels:	1	1
Relay outputs:	2 Relays / Change over (SPDT) 230 VAC / 2 A / 500 VA	4 Relays / Change over (SPDT) 230 VAC / 2 A / 500 VA
Dimensions:	W 96.0 x H 48.0 x D 120.0 mm	W 96.0 x H 48.0 x D 120.0 mm
Mounting dimensions:	W 91.5 x H 44.5 mm	W 91.5 x H 44.5 mm
Ambient temperature:	-20°C ... 60°C	-20°C ... 60°C
Atmospheric humidity:	< 95 % RH (not condensed)	< 95 % RH (not condensed)
Weight:	230 g	260 g
Ingress protection class (Housing / Connections):	IP 65 (Front)	IP 65 (Front)
Display:	4-digit 14-segment LED display in red Size 13.8 mm Free scaling	4-digit 14-segment LED display in red Size 13.8 mm Free scaling
EMV 2004/108/EG:	EN 61326-1	EN 61326-1
Programming:	Programming buttons	Programming buttons
Alignment:	Free programmable	Free programmable
Approvals / Certificates:	DNV-GL / EAC / UL	DNV-GL / EAC / UL

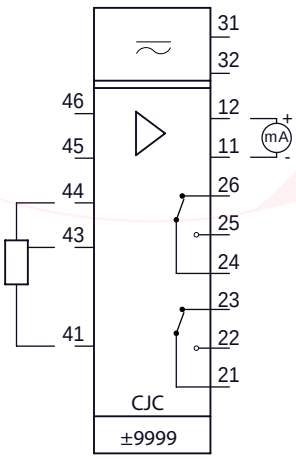

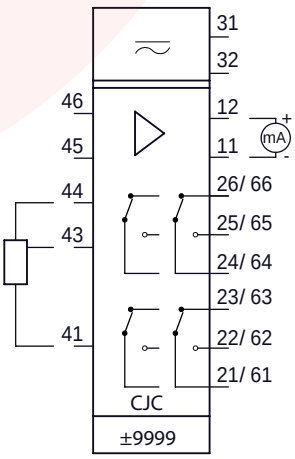

Type key page 213

Heinrich Kübler AG
Ruessenstrasse 4 | CH-6341 Baar | Phone +41 (0)41 766 62 62 | Fax +41 (0)41 766 62 63 | E-Mail info@kubler.ch | Internet www.kubler.ch

Type	5531B	5531B2 (in field frame)
Power supply:	-	-
Current input:	-	-
Current output:	-	-
Error alarm:	-	-
Input signal:	4 ... 20 mA	4 ... 20 mA
Measuring channels:	1	1
Display:	4-digit LCD display Size 16 mm	4-digit LCD display Size 16 mm
Dimensions:	W 96.0 x H 48.0 x D 120.0 mm	W 112.0 x H 92.0 x D 143.0 mm
Mounting dimensions / Housing material quality:	W 91.5 x H 44.5 mm	Al Mg Si 0,5, DIN 1725
Ambient temperature:	-20°C ... 60°C	-20°C ... 60°C
Atmospheric humidity:	< 95 % RH (not condensed)	< 95 % RH (not condensed)
Weight:	150 g	900 g
Ingress protection class (Housing / Connections):	IP 65 (Front)	IP 65
Intrinsically safe data:	$U_i \leq 45$ VDC $I_i \leq 500$ mA $P_i \leq 0.9$ W $L_i = 0$ mH $C_i = 0$ µF	$U_i \leq 45$ VDC $I_i \leq 500$ mA $P_i \leq 0.9$ W $L_i = 0$ mH $C_i = 0$ µF
EMV 2004/108/EG: ATEX 94/9/EG:	EN 61326-1 EN 50014 EN 50020 EN 60079-15 EN 61241-0, -11	EN 61326-1 EN 50014 EN 50020 EN 60079-15 EN 61241-0, -11
Programming:	Programming buttons	Programming buttons
Alignment:	-	-
Approvals / Certificates:	ATEX / EAC	ATEX

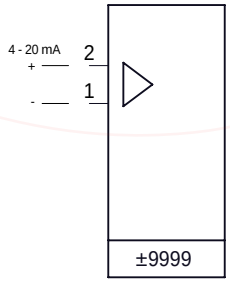

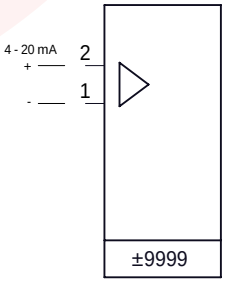

Type key page 213

Type	5202B2	5202B4
Power supply:	22 ... 250 V AC / DC	22 ... 250 V AC / DC
Current input:	-	-
Current output:	-	-
Error alarm:	Detection of cable break over LED	Detection of cable break over LED
Input signal:	Potential-free contact / NAMUR	Potential-free contact / NAMUR
Measuring channels:	2	2
Relay outputs:	2 x 1 Relay / Change over (SPDT) 230 VAC / 2 A / 100 VA	2 x 2 Relays / Normally open or normally closed 230 VAC / 2 A / 100 VA
Dimensions:	W 23.5 x H 109.0 x D 130.0 mm	W 23.5 x H 109.0 x D 130.0 mm
Mounting dimensions:	-	-
Ambient temperature:	-20°C ... 60°C	-20°C ... 60°C
Atmospheric humidity:	< 95 % RH (not condensed)	< 95 % RH (not condensed)
Weight:	230 g	230 g
Ingress protection class (Housing / Connections):	IP 20	IP 20
Burden:	U_m 250 V U_o 10.6 VDC I_o 13.8 mA P_o 0.038 W L_o 160 mH C_o 1.9 µF	U_m 250 V U_o 10.6 VDC I_o 13.8 mA P_o 0.038 W L_o 160 mH C_o 1.9 µF
EMV 2004/108/EG: ATEX 94/9/EG:	EN 61326-1 EN 50014 EN 50020 EN 60079-0, -11 EN 61241-1, -11	EN 61326-1 EN 50014 EN 50020 EN 60079-0, -11 EN 61241-1, -11
Programming:	-	-
Alignment:	-	-
Approvals / Certificates:	ATEX / EAC / SIL2 / UL	ATEX / EAC / SIL2 / UL

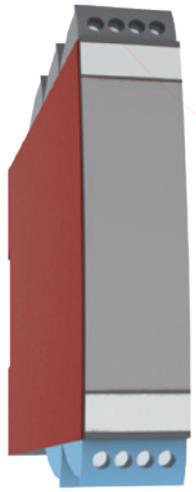

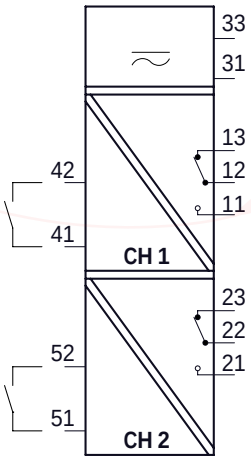

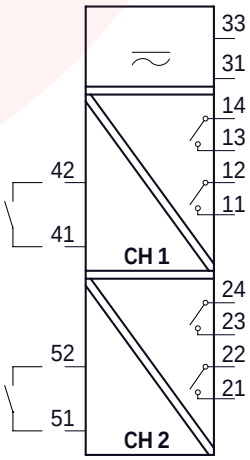

Type key page 213

Heinrich Kübler AG
Ruessenstrasse 4 | CH-6341 Baar | Phone +41 (0)41 766 62 62 | Fax +41 (0)41 766 62 63 | E-Mail info@kubler.ch | Internet www.kubler.ch

Type	A../90..	A.. / 240..
Current input:	0.0 ... 100.0 µA 0.0 ... 20.0 mA 4.0 ... 20.0 mA	0.0 ... 100.0 µA 0.0 ... 20.0 mA 4.0 ... 20.0 mA
Scaling:	0 ... 100 %, special scale possible	0 ... 100 %, special scale possible
Indication angle:	90°	240°
Material of window:	Glass	Glass
Housing material quality:	Polycarbonate	Sheet steel, (A48/240.. Polycarbonate)
Ambient temperature:	-10°C ... 55°C	-25°C ... 40°C
Atmospheric humidity:	< 75 % RH annual average, non-condensing	< 75 % RH annual average, non-condensing
Weight:	110 g / 150 g / 200 g / 250 g	200 g / 300 g / 400 g / 900 g
Ingress protection class (Housing / Connections):	IP 52 / IP00	IP 52 / IP 00
Dimensions:	Type A48/90.. 48.0 x 48.0 mm Type A72/90.. 72.0 x 72.0 mm Type A96/90.. 96.0 x 96.0 mm Type A144/90.. 144.0 x 144.0 mm	Type A48/240.. 48.0 x 48.0 mm Type A72/240.. 72.0 x 72.0 mm Type A96/240.. 96.0 x 96.0 mm Type A144/240.. 144.0 x 144.0 mm
Mounting dimensions:	Type A48/90.. 42.5 x 42.5 mm Type A72/90.. 66.0 x 66.0 mm Type A96/90.. 90.0 x 90.0 mm Type A144/90.. 136.0 x 136.0 mm	Type A48/240.. 45 x 45 mm Type A72/240.. 66.0 x 66.0 mm Type A96/240.. 90.0 x 90.0 mm Type A144/240.. 137.0 x 137.0 mm
EMV 2004/108/EG:	EN 60051, -1, -2, -9 EN 60529 EN 61010-1 EN 61326-1	EN 60051 EN 61010
Climatic suitability:	Climatic class 3 acc. to VDE/VDI 3540 page 2	Climatic class 3 acc. to VDE/VDI 3540 page 2
Approvals / Certificates:	-	-

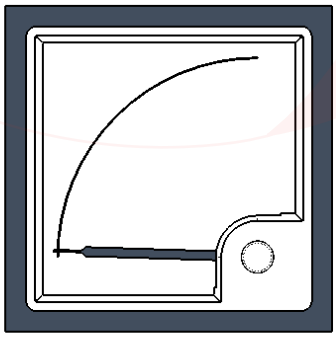

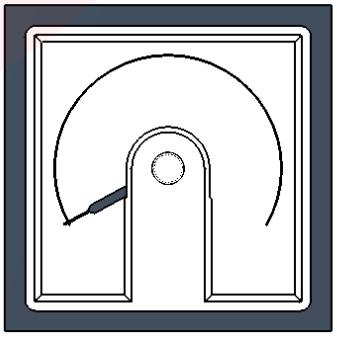

Type key page 213

Type	GL100..	GL1101
Power supply:	GL1002 115 VAC GL1003 230 VAC	GL1101 24 VDC
Input:	Floor electrodes AF (Cascade electrode) AFE (End electrode)	Floor electrodes AF (Cascade electrode) AFE (End electrode)
Relay outputs:	1 Normally open (NO) 250 V AC 1 Change over (SPDT) 250 V AC / 5A potential-free	2 Change over (SPDT) 250 V AC / 5A potential-free
Safety insulation:	4 kV	4 kV
Sensitivity range:	100 kOhm / 33 kOhm	100 kOhm / 33 kOhm
Switching delay:	3 Seconds	3 Seconds
Terminating resistor:	240 kOhm	240 kOhm
Dimensions:	W 36.0 x H 68.0 x D 75.0 mm	W 36.0 x H 68.0 x D 75.0 mm
Mounting dimensions / Housing material quality:	-	-
Ambient temperature:	0°C ... 50°C	0°C ... 50°C
Atmospheric humidity:	< 95 % RH (not condensed)	< 95 % RH (not condensed)
Weight:	250 g	250 g
Ingress protection class (Housing / Connections):	IP 50 / IP 20	IP 50 / IP 20
LED-Display:	Green - Power supply Orange - Wire break Red - Alarm relay	Green - Power supply Orange - Wire break Red - Alarm relay
Function:	Leckage detector for e.g. ingress of water - with test function button - external reset key	Leckage detector for e.g. ingress of water - with test function button - external reset key
EMV 83/336/EG:	EN 61000-6-2 / EN 61000-6-3 EN 61000-4-2 EN 61000-4-3 EN 61000-4-6 EN 61000-4-13	EN 61000-6-2 / EN 61000-6-3 EN 61000-4-2 EN 61000-4-3 EN 61000-4-6 EN 61000-4-13
Mounting:	11-pole mounting socket type MST11 (Please ordered separately)	11-pole mounting socket type MST11 (Please ordered separately)
Approvals / Certificates:	BV / GL	BV / GL

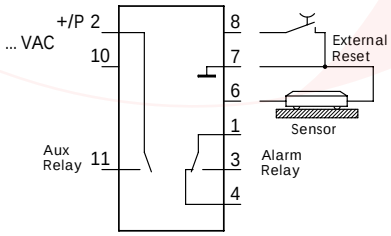

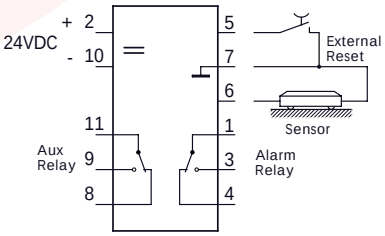

Type key page 213

Heinrich Kübler AG
Ruessenstrasse 4 | CH-6341 Baar | Phone +41 (0)41 766 62 62 | Fax +41 (0)41 766 62 63 | E-Mail info@kubler.ch | Internet www.kubler.ch

Type	AF (Cascade electrode)	AFE (End electrode)
Power supply:	-	-
Input:	-	-
Output:	-	-
Safety insulation:	-	-
Sensitivity range:	-	-
Distance of the electrodes:	1.0 mm	1.0 mm
Terminating resistor:	-	240 kOhm
Dimensions:	ø 45.0 x 34.0 mm	ø 45.0 x 34.0 mm
Housing material quality:	PVC / Stainless steel	PVC / Stainless steel
Ambient temperature:	-40°C ... 60°C	-40°C ... 60°C
Atmospheric humidity:	-	-
Weight:	30 g	30 g
Ingress protection class (Housing / Connections):	-	-
LED-Display:	-	-
Function:	Cascade electrode for connection to Leckage detector GL100.. / GL1101	End electrode for connection to Leckage detector GL100.. / GL1101
EMV 83/336/EG:	-	-
Mounting bore:	ø 5.0 mm	ø 5.0 mm
Approvals / Certificates:	-	-

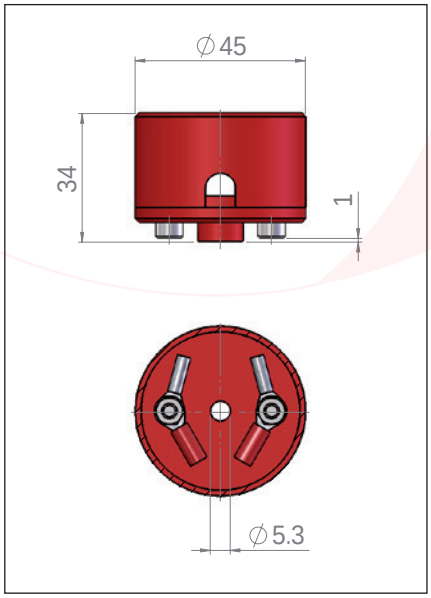

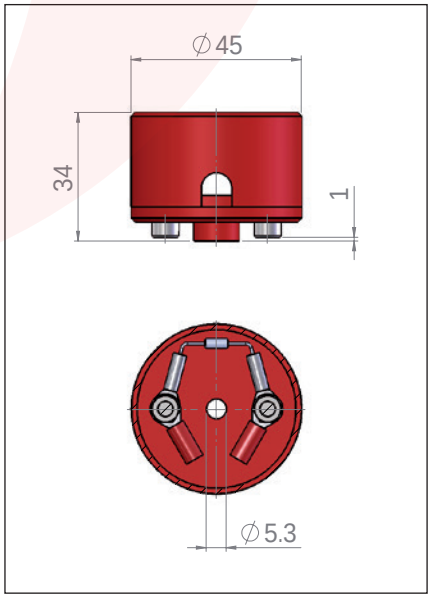

Type key page 213

Heinrich Kübler AG
Ruessenstrasse 4 | CH-6341 Baar | Phone +41 (0)41 766 62 62 | Fax +41 (0)41 766 62 63 | E-Mail info@kubler.ch | Internet www.kubler.ch

Type	7201..S	7201..E
Power supply:	72011S 24 VDC* 72012S 115 VAC 72013S 230 VAC	72013E 230 VAC
Probe supply:	4 V AC / 0.2 mA	4 V AC / 0.2 mA
Output:	1 Change over (SPDT) 250 V AC / 16 A / 750 VA potential-free	1 Change over (SPDT) 250 V AC / 16 A / 750 VA potential-free
Safety insulation:	6 kV	6 kV
Sensitivity range:	5 … 150 kOhm (adjustable)	5 … 450 kOhm (adjustable)
Delay time:	0.5 / 7 Seconds (selectable)	0.5 / 7 Seconds (selectable)
Dimensions:	W 35.0 x H 84.0 x D 58.0 mm	W 35.0 x H 84.0 x D 58.0 mm
Mounting dimensions / Housing material quality:	-	-
Ambient temperature:	-20°C ... 60°C	-20°C ... 60°C
Atmospheric humidity:	< 95 % RH (not condensed)	< 95 % RH (not condensed)
Weight:	180 g	180 g
Ingress protection class:	IP 20	IP 20
LED-Display:	-	-
Function:	Level monitoring 1-point regulator or 2-point regulator	Level monitoring 1-point regulator or 2-point regulator
EMV 2004/108/EG:	EN 61000-4-2, -3, -4, -5, -6 EN 55022	EN 61000-4-2, -3, -4, -5, -6 EN 55022
Mounting:	Mounting rail DIN EN 60715 TH35	Mounting rail DIN EN 60715 TH35
Approvals / Certificates:	-	-

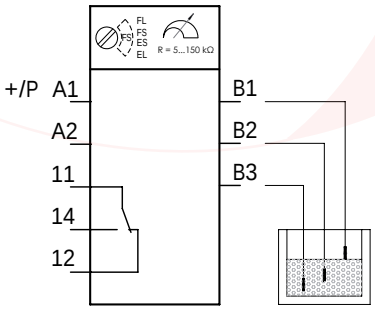

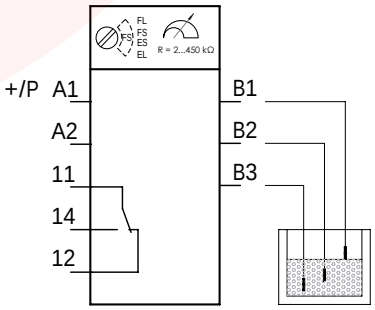

Type key page 213

* = only to be used on a not grounded, galvanically isolated 24V DC power supply

Heinrich Kübler AG
Ruessenstrasse 4 | CH-6341 Baar | Phone +41 (0)41 766 62 62 | Fax +41 (0)41 766 62 63 | E-Mail info@kubler.ch | Internet www.kubler.ch

Type key page 213

Continuous display and monitoring of fluid levels

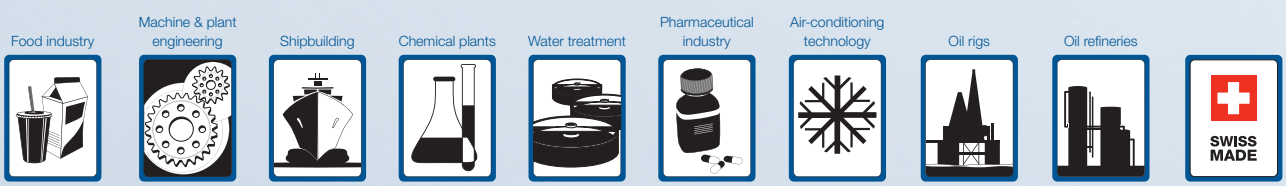

1015

BYPASS LEVEL INDICATOR

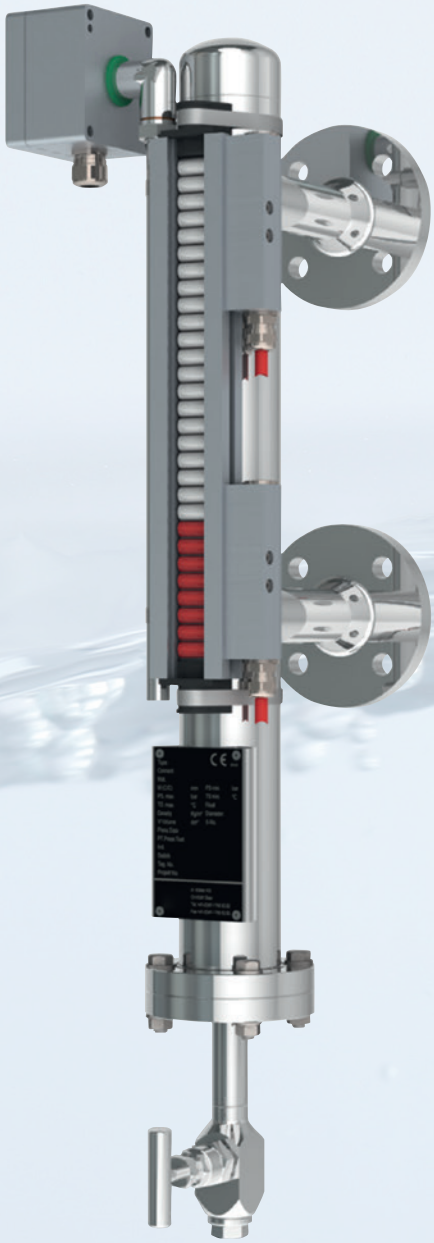

Table of content

Bypass Level Indicator / Content ... 234
Bypass Level Indicator / Functional description ... 235
Bypass Level Indicator / Type key ... 236
Bypass Level Indicator / Type key ... 237
Bypass Level Indicator / Type key ... 238
Bypass Level Indicator / Type key ... 239
Bypass Level Indicator / Type key ... 240
Bypass Level Indicator / Type key ... 241
Bypass Level Indicator / Stainless steel PN 16 ... 242
Bypass Level Indicator / Stainless steel PN 40 ... 243
Bypass Level Indicator / Stainless steel PN 63 ... 244
Bypass Level Indicator / Stainless steel PN 100 ... 245
Bypass Level Indicator / Stainless steel PN 160 ... 246
Bypass Level Indicator / Stainless steel PN 250-400 ... 247
Bypass Level Indicator / Stainless steel without process side connections ... 248
Bypass Level Indicator / Stainless steel - Liquid gas design ... 249
Bypass Level Indicator / Stainless steel with steam tracing system ... 250
Bypass Level Indicator /Stainless steel differential compensated ... 251
Bypass Level Indicator / Titanium PN 16 - 40 ... 252
Bypass Level Indicator / Alloy C PN 16 - 40 ... 253
Bypass Level Indicator / PVC ... 254
Bypass Level Indicator / PVC ... 255
Bypass Level Indicator / Polypropylene ... 256
Bypass Level Indicator / PVDF ... 257
Bypass Level Indicator / Stainless steel - ECTFE coated ... 258
Bypass Level Indicator / Stainless steel - PFA coated ... 259
Bypass Chamber for guided wave radar (GWR) / ACS1 ... 260
Bypass Level Indicator for guided wave radar (GWR) / ACS2 ... 261
Bypass Level Indicator for guided wave radar (GWR) / ACS3 ... 262
Bypass Level Indicator for guided wave radar (GWR) / ACS4 ... 263
Bypass Level Indicator / Cylindrical float PN 4 ... 264
Bypass Level Indicator / Cylindrical float PN 4 ... 265
Bypass Level Indicator / Cylindrical float PN 16 ... 266
Bypass Level Indicator / Cylindrical float PN 16 ... 267
Bypass Level Indicator / Cylindrical float PN 40 ... 268
Bypass Level Indicator / Cylindrical float PN 40 ... 269
Bypass Level Indicator / Cylindrical float PN 160 ... 270
Bypass Level Indicator / Cylindrical float PN 320 / 63 ... 271
Bypass Level Indicator / Cylindrical float PN 16 / K74 ... 272
Bypass Level Indicator / Cylindrical float PN 40 / K74 ... 273
Bypass Level Indicator / Magnetic roller indicator ... 274
Bypass Level Indicator / Scale ... 275
Bypass Level Indicator / Level transmitter ... 276
Bypass Level Indicator / Level transmitter ... 277
Bypass Level Indicator / Level transmitter ... 278
Bypass Level Indicator / Level transmitter ... 279
Bypass Level Indicator / Level transmitter ... 280
Bypass Level Indicator / Level transmitter ... 281
Bypass Level Indicator / Magnetic switch ... 282
Bypass Level Indicator / Magnetic switch ... 283
Bypass Level Indicator / Magnetic switch ... 284
Bypass Level Indicator / Magnetic switch ... 285
Bypass Level Indicator / Magnetic switch ... 286
Bypass Level Indicator / Magnetic switch ... 287
Bypass Level Indicator / Magnetic switch ... 288
Bypass Level Indicator / Magnetic switch ... 289
Bypass Level Indicator / Isolation / Heat tracing ... 290
Bypass Level Indicator / Isolation ... 291
Bypass Level Indicator / Chamber end top ... 292
Bypass Level Indicator / Chamber end top ... 293
Bypass Level Indicator / Chamber end bottom ... 294
Bypass Level Indicator / Chamber end bottom ... 295
Bypass Level Indicator / Process connection ... 296
Bypass Level Indicator / Dampening spring / Support bracket ... 297

Heinrich Kübler AG
Ruessenstrasse 4 | CH-6340 Baar | Phone +41 (0)41 766 62 62 | Fax +41 (0)41 766 62 63 | E-Mail info@kubler.ch | Internet www.kubler.ch

Functional description

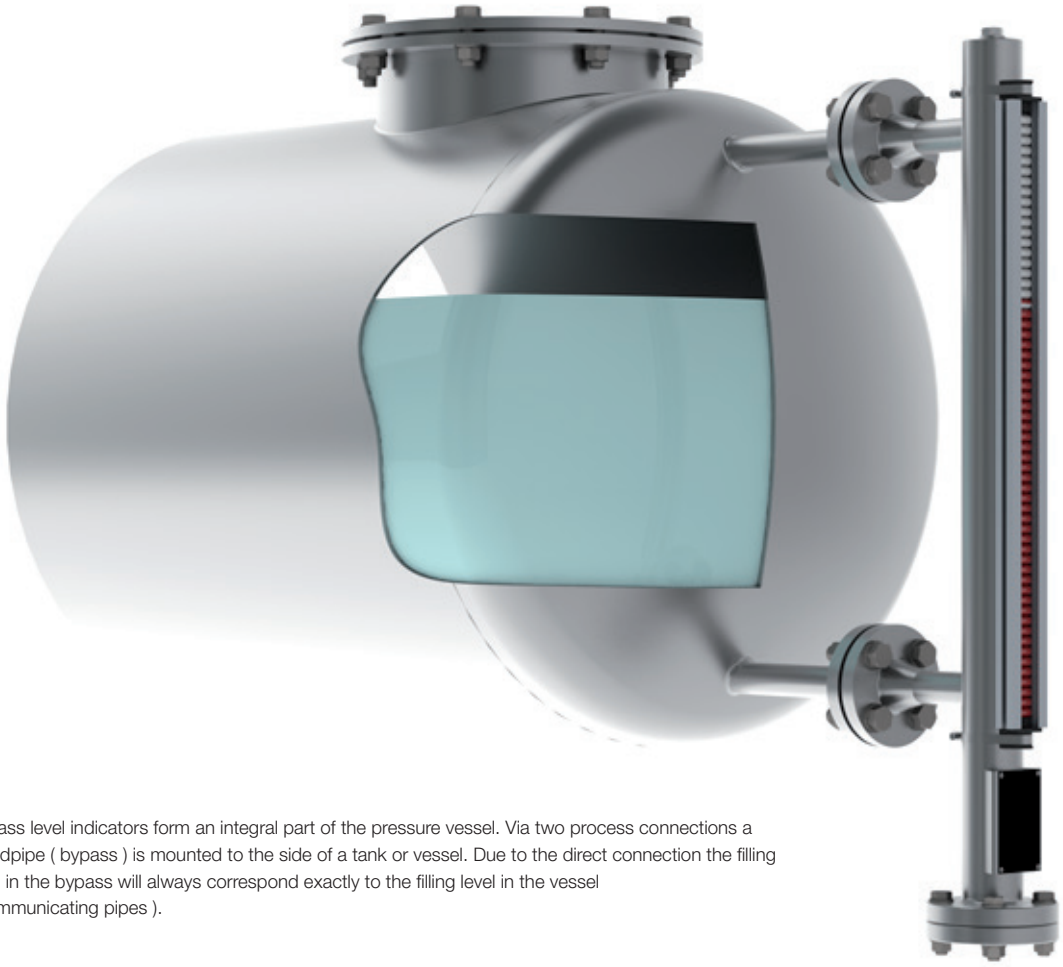

Bypass level indicators form an integral part of the pressure vessel. Via two process connections a standpipe (bypass) is mounted to the side of a tank or vessel. Due to the direct connection the filling level in the bypass will always correspond exactly to the filling level in the vessel (communicating pipes).

In the bypassing pipe a cylindrical float with a built-in magnetic system is contained. The concentrated magnetic field of the permanent magnet corresponds exactly to the filling level of the liquid in the bypass.
In a contactless way the magnetic field transmits itself through the wall of the standpipe onto externally mounted displaying, recording and switching elements.

Design limits

Specific gravity:	≥ 350 kg/m³
Design pressure:	-1 bar ... 300 bar
Design temperature:	-196°C ... 400°C

Code 1

	Key 1 ... - **Version**
BNA[1]	Bypass level indicator
BMG[1]	Bypass level indicator with Level transmitter
ACS1A[1]	Bypass complete solution for GWR system, chamber ≤ DN50 / 2“
ACS1B[1]	Bypass complete solution for GWR system, chamber DN65 / 2.5“
ACS1C[1]	Bypass complete solution for GWR system, chamber DN80 / 3“
ACS1D[1]	Bypass complete solution for GWR system, chamber ≥ DN100 / 4“
ACS2[1]	Bypass complete solution for GWR system
ACS3[1]	Bypass complete solution for GWR system
ACS4[1]	Bypass complete solution for GWR system

Code 2

	Key 1 (for process connection flange) ... - **Flange connection**		Key 1 (for process connection other) ... - **Other process connection**
FE[1]	Flange according to EN	GM[1]	Female thread G
FA[1]	Flange according to ANSI	NPTM[1]	Female thread NPT
F[1]	Flange according to …	GN[1]	Male thread G
FS[1]	Flange according to drawing	NPTN[1]	Male thread NPT
		SE[1]	Welding stub end
		OS[1]	Without process side connections (Code 3 not applicable)

Code 3

	Key 1.1 (only for flange) ... / ... / ... - **Flange connection**		Key 1.2 (only for flange) ... / ... / ... - **Flange connection**		Key 1.3 (only for flange) ... / ... / ... - **Flange connection**
…	Flange nominal bore	…	Flange pressure rating	…	Flange facing

Code 3

	Key 1 (for process connection other) ... - **Size**
…	Threaded connection size
…	Welding stub end size

Example

Code	**1**		**2**		**3**						**4**																		**5**		**6**				**7**						**8**	
Key	1	-	1	-	1.1	/	1.2	/	1.3	-	1	/	2	/	3	/	4	/	5	/	6	/	7	/	8	-	1	-	1	-	1	/	2	/	3	-	1	-
Example	BMG	-	FE	-	25	/	16	/	B1	-	ALF	/	TP43B	/	V	/	K15	/							EXIAG	-	DU	-	M…	-	V	/	60	/	2	-		-

Black = not possible according to Atex / Blue = possible according to Atex Exia / Blue[1] = possible according to Atex Exia and Exd / Black[1] = possible according to Atex Exd

Heinrich Kübler AG
Ruessenstrasse 4 | CH-6340 Baar | Phone +41 (0)41 766 62 62 | Fax +41 (0)41 766 62 63 | E-Mail info@kubler.ch | Internet www.kubler.ch

Code 4

	Key 1 **...** / ... / ... / ... / ... / ... / ... / ... - **Electrical connection level transmitter**		Key 2 ... / **...** / ... / ... / ... / ... / ... / ... - **Control unit**		Key 3 ... / ... / **...** / ... / ... / ... / ... / ... - **Level transmitter tube material quality**
ALE	Aluminium terminal box 64 x 58 x 34 mm (only without control unit)	TP43A[1]	TP5343A	V[1]	Stainless steel
		TP43B[1]	TP5343B Ex		
ALF	Aluminium terminal box 80 x 75 x 57 mm	TD35A[1]	TD5335A		
ALDA[1]	Aluminium terminal box Ø 95 x 84 mm	TD35B[1]	TD5335D Ex		
AVA	Stainless steel terminal box Ø 82 x 110 mm	TP50AP[1]	TP5350AP / PROFIBUS® PA		
AVDA[1]	Stainless steel terminal box Ø 82 x 110 mm	TP50BP[1]	TP5350BP Ex / PROFIBUS® PA		
AVM	Stainless steel terminal box Ø 50 x 117 mm	TP50AF[1]	TP5350AF / FOUNDATION™ Fieldbus		
AVDM[1]	Stainless steel terminal box Ø 169 x 117 mm	TP50BF[1]	TP5350BF Ex / FOUNDATION™ Fieldbus		
DAAVDM[1]	Stainless steel terminal box with LED display Ø 169 x 117 mm	TMT181A[1]	TMT181		
		TMT181B[1]	TMT181 Ex		
APA	Polyester terminal box 80 x 75 x 55 mm	ZMU[1]	XT42SI Ex		
APB	Polyester terminal box 80 x 75 x 55 mm / Exm	TAMX[1]	Other control unit		
ABA	ABS terminal box 80 x 82 x 55 mm	MST[1]	Magnetostrictive / 4 ... 20 mA		
K	Connection cable	MSTB[1]	Magnetostrictive / 4 ... 20 mA / Ex		
K68	Connection cable IP 68 (≥ G 3/8")	MSTH[1]	Magnetostrictive / HART®-Protocol		
DAALA	Aluminium terminal box with LED display Ø 82 x 100 mm	MSTHB[1]	Magnetostrictive / HART®-Protocol / Ex		
DAAVDA[1]	Stainless steel terminal box with LED display Ø 82 x 100 mm				

Code 4

	Key 4 ... / ... / ... / **...** / ... / ... / ... / ... - **Accuracy**		Key 5 (only for connection cable) ... / ... / ... / ... / **...** / ... / ... / ... - **Length of cable**		Key 6 (only for connection cable) ... / ... / ... / ... / ... / **...** / ... / ... - **Connection cable**
K5[1]	Accuracy 5 mm / -30 ... 130°C	...	Length of cable in meter	PVC[1]	PVC connection cable
K5HTF[1]	Accuracy 5 mm / -40 ... 200°C			PVCB[1]	PVC connection cable with blue coating
K5HT[1]	Accuracy 5 mm / -40 ... 250°C			SIL[1]	Silicone connection cable
K10[1]	Accuracy 10 mm / -30 ... 130°C			PUR[1]	PUR connection cable
K10HTF[1]	Accuracy 10 mm / -40 ... 200°C			RAD[1]	Radox connection cable
K10HT[1]	Accuracy 10 mm / -40 ... 250°C				
K15[1]	Accuracy 15 mm / -30 ... 130°C				
K15HTF[1]	Accuracy 15 mm / -40 ... 200°C				
K15HT[1]	Accuracy 15 mm / -40 ... 250°C				
K1[1]	Accuracy 0.2 mm / -40 ... 125°C				
K1HT[1]	Accuracy 0.2 mm / -40 ... 250°C				
K1HHT[1]	Accuracy 0.2 mm / -40 ... 450°C				

Code 4

	Key 7 (only for connection cable) ... / ... / ... / ... / ... / ... / **...** / ... - **Connection cable option**		Key 8 ... / ... / ... / ... / ... / ... / ... / **...** - **Approvals level transmitter**
KA[1]	Shielded	EXIAG	Acc. to Exia, atmosphere gas
KB[1]	Shielded / oil-resistant	EXIAGD	Acc. to Exia, atmosphere gas and dust
KC[1]	Shielded / oil-resistant / halogen-free	EXDG[1]	Acc. to Exd, atmosphere gas
KD[1]	Oil-resistant	EXDGD[1]	Acc. to Exd, atmosphere gas and dust
KE[1]	Oil-resistant / halogen-free	EXIADG[1]	Acc. to Exia and Exd, atmosphere gas
KF[1]	Halogen-free	EXIADGD[1]	Acc. to Exia and Exd, atmosphere gas and dust

Example

9			10							11						12		13		
1	2	3	1	2	3	4	5	6	7	1	2	3	4	5	6	1	2	1	2	3
MRB	SA1		3	BGU	N	1	SIL	KA	EXIAG	ZVSS	250				B152			EX	PEDII	

Black = not possible according to Atex / Blue = possible according to Atex Exia / Blue[1] = possible according to Atex Exia and Exd / Black[1] = possible according to Atex Exd

1015

Code 5

	Key 1 … - **Electrical connection position of the level transmitter**
DO[1]	Electrical connection top mounted
DU[1]	Electrical connection bottom mounted

Code 6

	Key 1 … - **Centre distance / Length of instrument**
M…[1]	Centre distance in mm
L…[1]	Length of instrument in mm (only for instrument without process side connections)

Code 7

	Key 1 … / … / … - **Bypass chamber material quality**		Key 2 … / … / … - **Bypass chamber outside diameter**		Key 3 … / … / … - **Bypass chamber wall thickness**
V[1]	Stainless steel	32	Ø 32.00 mm (P)	…[1]	Bypass chamber wall thickness in mm (see the relevant catalog page or by calculation)
VP[1]	Stainless steel electropolished / Ra ca. 0,8µm (not attestable)	60[1]	Ø 60.30 mm (V / VP / TI / CS)		
		61[1]	Ø 60.33 mm (V / VP / MO / HC / CS)		
TI[1]	Titanium	63	Ø 63.00 mm (P / PP / PF)		
HC[1]	Alloy C	63[1]	Ø 63.50 mm (V / VP / VEEC / VPFA / VETF)		
MO[1]	6Mo	73[1]	Ø 73.03 mm (V / VP / MO / TI / HC / CS)		
CS[1]	Steel (only ACS..)	76[1]	Ø 76.10 mm (V / VP)		
VEEC[1]	Stainless steel ECTFE coated	88[1]	Ø 88.90 mm (V / VP / CS)		
VPFA[1]	Stainless steel PFA coated	114[1]	Ø 114.30 mm (V / VP / CS)		
VETF[1]	Stainless steel ETFE coated				
P	PVC				
PP	Polypropylene				
PF	PVDF				

Code 8

	Key 1 … - **Bypass chamber additional design**
HM76[1]	Steam tracing system with outer tube Ø 76.10 x 2.00 mm
DK[1]	Differential compensated
ZK1[1]	2-chamber system with G / BSP socket (only for bypass level indicator ACS2)
ZK2[1]	2-chamber system with NPT socket (only for bypass level indicator ACS2)

Example

Code	**1**		**2**		**3**						**4**																				**5**		**6**				**7**						**8**	
Key	1	-	1	-	1.1	/	1.2	/	1.3	-	1	/	2	/	3	/	4	/	5	/	6	/	7	/	8	-	1	-	1	-	1	/	2	/	3	-	1	-
Example	BMG	-	FE	-	25	/	16	/	B1	-	ALF	/	TP43B	/	V	/	K15	/							EXIAG	-	DU	-	M…	-	V	/	60	/	2	-		-

Black = not possible according to Atex / Blue = possible according to Atex Exia / Blue[1] = possible according to Atex Exia and Exd / Black[1] = possible according to Atex Exd

Heinrich Kübler AG
Ruessenstrasse 4 | CH-6340 Baar | Phone +41 (0)41 766 62 62 | Fax +41 (0)41 766 62 63 | E-Mail info@kubler.ch | Internet www.kubler.ch

Code 9

	Key 1 ... / ... / ... - **Magnetic roller indicator**		Key 2 ... / ... / ... - **Scale**		Key 3 ... / ... / ... - **Mag. roller indicator sight extension**
MRA	Magnetic roller indicator MRA	SAK	Scale in Aluminium with adhesive foil	PV[1]	Acryl glass extension
MRB[1]	Magnetic roller indicator MRB (Ex)	SA0[1]	Scale in Aluminium without engraving		
MRAN	Mag. roller indicator MRAN over-roll-protected	SA1[1]	Scale in Aluminium with engraving in %		
MRBN[1]	Mag. roller indicator MRBN over-roll-prot. (Ex)	SA2[1]	Scale in Aluminium with engraving in cm		
MRK[1]	Magnetic roller indicator MRK	SA3[1]	Scale in Aluminium with engraving in inch.		
MNA	Magnetic roller indicator MNA	SA4[1]	Scale in Aluminium with engraving acc. to customized table		
MNB[1]	Magnetic roller indicator MNB (Ex)	SV0[1]	Scale in Stainless steel without engraving		
MNAN	Magnetic roller indicator MNAN over-roll-prot.	SV1[1]	Scale in Stainless steel with engraving in %		
MNBN[1]	Mag. roller indicator MNBN over-roll-prot. (Ex)	SV2[1]	Scale in Stainless steel with engraving in cm		
MNAV	Magnetic roller indicator MNAV	SV3[1]	Scale in Stainless steel with engraving in inch.		
MNBV[1]	Magnetic roller indicator MNBV (Ex)	SV4[1]	Scale in Stainless steel with engraving acc. to customized table		
MNAVN	Magnetic roller indicator MNAVN over-roll-protected				
MNBVN[1]	Magnetic roller indicator MNBVN over-roll-prot. (Ex)				
MNKV[1]	Magnetic roller indicator MNKV				

Code 10

	Key 1 ... / ... / ... / ... / ... / ... / ... - **Number of magnetic switches**		Key 2 ... / ... / ... / ... / ... / ... / ... - **Magnetic switch**		Key 3 ... / ... / ... / ... / ... / ... / ... - **Magnetic switch option**
...	Number of magnetic switches	BGU	Magnetic switch BGU	R22[1]	Switch protective circuit with 22 ohm / 0.21 W resistor
		BGUD[1]	Magnetic switch BGU	N[1]	Switch protective circuit according to NAMUR EN 60947
		BGUALE	Magnetic switch BGUALE		
		BGUASQ	Magnetic switch BGUASQ		
		BGUASMA	Magnetic switch BGUASMA		
		ALFU	Magnetic switch ALFU		
		ALFI	Magnetic switch ALFI (inductive)		
		ALEU	Magnetic switch ALEU		
		APAVU	Magnetic switch APAVU		
		APBVU	Magnetic switch APBVU		
		RU60	Magnetic switch RU60		
		RUV60	Magnetic switch RUV60		
		RUVD60	Magnetic switch RUVD60		
		RU73	Magnetic switch RU73 (for chamber ≥ Ø 73 mm)		
		RUV73	Magnetic switch RUV73 (for chamber ≥ Ø 73 mm)		
		RUVD73	Magnetic switch RUVD73 (for chamber ≥ Ø 73 mm)		
		ALDAU[1]	Magnetic switch ALDAU		
		PS32	Magnetic switch PS32		
		PO32	Magnetic switch PO32		
		PU32	Magnetic switch PU32		
		PU32ASH	Magnetic switch PU32ASH		

Code 10

	Key 4 ... / ... / ... / ... / ... / ... / ... - **Length of cable**		Key 5 ... / ... / ... / ... / ... / ... / ... - **Connection cable**		Key 6 ... / ... / ... / ... / ... / ... / ... - **Connection cable option**
...	Length of cable in meter	PVC[1]	PVC connection cable	KA[1]	Shielded
		PVCB[1]	PVC connection cable with blue coating	KB[1]	Shielded / oil-resistant
		SIL[1]	Silicone connection cable	KC[1]	Shielded / oil-resistant / halogen-free
		PUR[1]	PUR connection cable	KD[1]	Oil-resistant
		RAD[1]	Radox connection cable	KE[1]	Oil-resistant / halogen-free
				KF[1]	Halogen-free

Example

9								10												11												12			13			
1	/	2	/	3	-	1	/	2	/	3	/	4	/	5	/	6	/	7	-	1	/	2	/	3	/	4	/	5	/	6	-	1	/	2	-	1	/	2	/	3
MRB	/	SA1			-	3	/	BGU	/	N	/	1	/	SIL	/	KA	/	EXIAG	-	ZVSS	/	250	/		/					B152	-				-	EX	/	PEDII		

Black = not possible according to Atex / Blue = possible according to Atex Exia / Blue[1] = possible according to Atex Exia and Exd / Black[1] = possible according to Atex Exd

Code 10

	Key 7 … / … / … / … / … / … / … - **Approvals magnetic switch**
EXIAG	Acc. to Exia, atmosphere gas
EXIAGD	Acc. to Exia, atmosphere gas and dust
EXDG[1]	Acc. to Exd, atmosphere gas
EXDGD[1]	Acc. to Exd, atmosphere gas and dust
EXIADG[1]	Acc. to Exia and Exd, atmosphere gas
EXIADGD[1]	Acc. to Exia and Exd, atmosphere gas and dust

Code 11

	Key 1 … / … / … - **Float**		Key 2 … / … / … - **Float length / Number of balls***		Key 3 … / … / … - **Magnetic system**
ZVSS[1]	Float in Stainless steel	…	Acc. to float table	…	Acc. to float table
ZVEECSSA[1]	Float in Stainless steel E-CTFE coated		on page 264 - 266 / 270 - 271		on page 264 - 266 / 270 - 271
ZVEECSSB[1]	Float in Stainless steel E-CTFE coated				
ZVPFASSA[1]	Float in Stainless steel PFA coated				
ZVPFASSB[1]	Float in Stainless steel PFA coated				
ZTIKS1[1]	Float in Titanium				
ZTIKS2[1]	Float in Titanium				
ZTIKS3[1]	Float in Titanium				
ZPSS24	Float in PVC (Page 254)				
ZPSS	Float in PVC				
ZPPSS	Float in Polypropylene				
ZPFSS	Float in PVDF		* only ZTIKS1 - 3		

Code 11 (only protocol float)

	Key 1 … / … / … / … / … / … - **Float**		Key 2 … / … / … / … / … / … / … - **Float length**		Key 3 … / … / … / … / … / … / … - **Design pressure**
ZVS[1]	Float in Stainless steel	…	Acc. to float table	…	Acc. to float table
ZTIS[1]	Float in Titanium		on page 267 - 269 / 272 - 273		on page 267 - 269 / 272 - 273
ZHCS[1]	Float in Alloy C				
ZTIEECSA[1]	Float in Titanium E-CTFE coated (on request)				
ZTIEECSB[1]	Float in Titanium E-CTFE coated (on request)				
ZTIPFASA[1]	Float in Titanium PFA coated (on request)				
ZTIPFASB[1]	Float in Titanium PFA coated (on request)				
ZGS	Float in Glass (on request)				
ZCES	Float in Cevolite Eccolite (on request)				

Code 11 (only protocol float)

	Key 4 … / … / … / … / … / … / … - **Design temperature**		Key 5 … / … / … / … / … / … / … - **Specific gravity 1**		Key 6 (only interface float) … / … / … / … / … / … / … - **Specific gravity 2**
…	Acc. to float table	…	Acc. to float table	…	Acc. to protocol
	on page 267 - 269 / 272 - 273		on page 267 - 269 / 272 - 273		

Example

Code	**1**		**2**		**3**						**4**														**5**		**6**						**7**						**8**	
Key	1	-	1	-	1.1	/	1.2	/	1.3	-	1	/	2	/	3	/	4	/	5	/	6	/	7	/	8	-	1	-	1	-	1	/	2	/	3	-	1	-
Example	BMG	-	FE	-	25	/	16	/	B1	-	ALF	/	TP43B	/	V	/	K15	/							EXIAG	-	DU	-	M…	-	V	/	60	/	2	-		-

Black = not possible according to Atex / Blue = possible according to Atex Exia / Blue[1] = possible according to Atex Exia and Exd / Black[1] = possible according to Atex Exd

Heinrich Kübler AG
Ruessenstrasse 4 | CH-6340 Baar | Phone +41 (0)41 766 62 62 | Fax +41 (0)41 766 62 63 | E-Mail info@kubler.ch | Internet www.kubler.ch

Code 11 (only protocol float)

	Key 7 … / … / … / … / … / … / … / … - **Magnetic system**
…	Acc. to float table on page 267 - 269 / 272 - 273

Code 12

	Key 1 … / … - **Instrument isolation**		Key 2 … / … - **Electrical heat tracing**
AIT	Armaflex isolation AIT	H75A	Electrical heat tracing 75°C
AHT	Armaflex isolation AHT	H75B	Electrical heat tracing 75°C acc. to EExe
SW	Rock-wool isolation	H150A	Electrical heat tracing 150°C
		H150B	Electrical heat tracing 150°C acc. to EExe

Code 13

	Key 1 … / … / … - **Approvals / 1**		Key 2 … / … / … - **Approvals / 2**		Key 3 … / … / … - **Approvals / 3**
EX	Acc. to Ex	PEDII[1]	Acc. to PED97/23/EC category II	ABS[1]	Approval American Bureau of Shipping
		PEDIV[1]	Acc. to PED97/23/EC category IV	BV[1]	Approval Bureau Veritas
				GL[1]	Approval Germanischer Lloyd
				LR[1]	Approval Lloyd's Register
				EAC3[1]	Approval EAC TR CU 004/2011 & 012/2011 & 020/2011 & 032/2013

Example

9			10							11						12		13		
1	2	3	1	2	3	4	5	6	7	1	2	3	4	5	6	1	2	1	2	3
MRB	SA1		3	BGU	N	1	SIL	KA	EXIAG	ZVSS	250				B152			EX	PEDII	

Black = not possible according to Atex / Blue = possible according to Atex Exia / Blue[1] = possible according to Atex Exia and Exd / Black[1] = possible according to Atex Exd

Heinrich Kübler AG
Ruessenstrasse 4 | CH-6340 Baar | Phone +41 (0)41 766 62 62 | Fax +41 (0)41 766 62 63 | E-Mail info@kubler.ch | Internet www.kubler.ch

Type **BNA-..-../../..-M..-V/6../..-MR..-Z..S/..**

Material quality:	1.4404 / 1.4435 / 1.4571 (316L / 316Ti)
Centre distance M:	150 ... 25000 mm**
Specific gravity:	≥ 400 kg/m³
Design pressure:	-1 bar ... 16 bar
Design temperature:	-196°C ... 400°C

Design

Chamber:	Ø 60.30 x 2.00 mm Ø 60.33 x 2.77 mm / NACE Ø 63.50 x 2.00 mm
Process connection:	Type key page 236
Chamber end top:	Page 292 - 293
Chamber end bottom:	Page 294 - 295
Float:	Page 266 - 267

Option magnetic roller indicator / Page 274

Aluminium or Stainless steel / Pocan	-40°C ... 200°C
Aluminium or Stainless steel / Ceramic	-40°C ... 400°C

Option scale / Page 275

Aluminium / Stainless steel	With adhesive foil / Engraving / Blank

Option magnetic switch / Page 282 - 289

Aluminium / Stainless steel	-60°C ... 300°C

Option level transmitter / Page 276 - 280

Accuracy / Reed contacts:	5 / 10 / 15 mm
Accuracy / Magnetostrictive:	0.2 mm
Control unit:	- Programmable - Hart-programmable / SIL2 - Profibus PA - Foundation Fieldbus

Option electrical heat tracing / Page 290

Holding temperature:	~10°C / Frost protection

Option instrument isolation / Page 290 - 291

Isolation:	Armaflex isolation / Rock-wool isolation

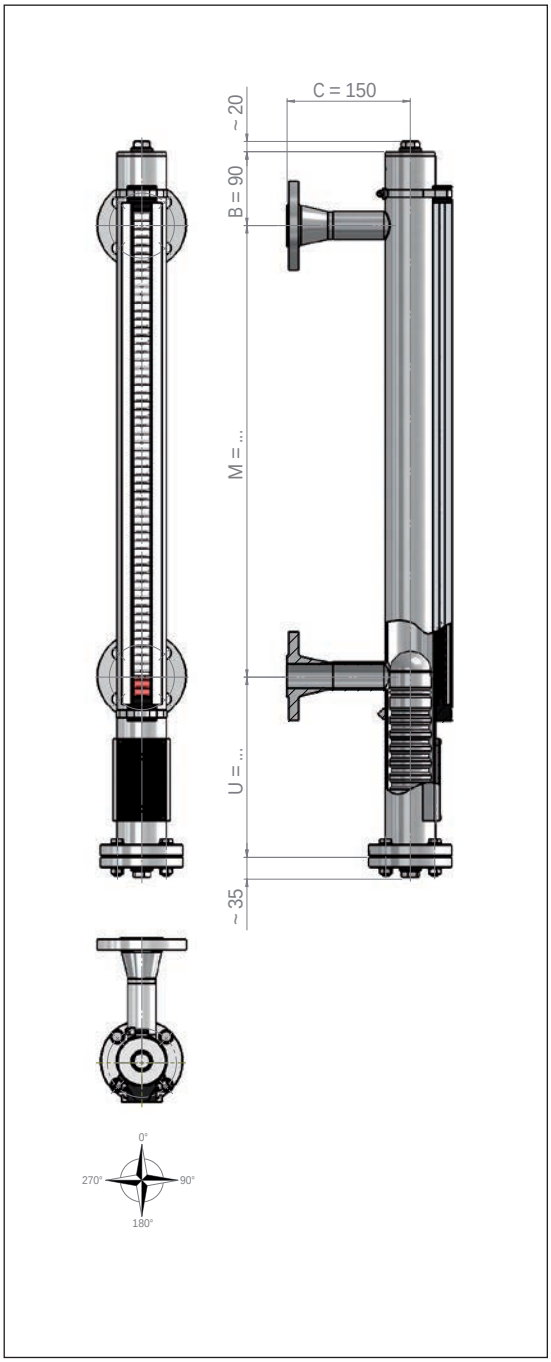

Approvals / Certificates

ATEX*

II 1/2G c IIC T6 - T1 II 2D c IIC T6 - T1

Liquid temperature Ex max. 300°C

The bypass level indicator are based on a modular design and can be arranged individually.
Type key page 236 - 241

* The approval is dependent on the equipment combination

** Depends on the approval

Heinrich Kübler AG
Ruessenstrasse 4 | CH-6340 Baar | Phone +41 (0)41 766 62 62 | Fax +41 (0)41 766 62 63 | E-Mail info@kubler.ch | Internet www.kubler.ch

Type **BNA-..-../../..-M..-V/6../..-MR..-Z..S/..**

Material quality:	1.4404 / 1.4435 / 1.4571 (316L / 316Ti)
Centre distance M:	150 ... 25000 mm**
Specific gravity:	≥ 480 kg/m³
Design pressure:	-1 bar ... 40 bar
Design temperature:	-196°C ... 400°C

Design

Chamber:	Ø 60.30 x 2.00 mm Ø 60.33 x 2.77 mm / NACE Ø 63.50 x 2.00 mm
Process connection:	Type key page 236
Chamber end top:	Page 292 - 293
Chamber end bottom:	Page 294 - 295
Float:	Page 268

Option magnetic roller indicator / Page 274

Aluminium or Stainless steel / Pocan	-40°C ... 200°C
Aluminium or Stainless steel / Ceramic	-40°C ... 400°C

Option scale / Page 275

Aluminium / Stainless steel	With adhesive foil / Engraving / Blank

Option magnetic switch / Page 282 - 289

Aluminium / Stainless steel	-60°C ... 300°C

Option level transmitter / Page 276 - 280

Accuracy / Reed contacts:	5 / 10 / 15 mm
Accuracy / Magnetostrictive:	0.2 mm
Control unit:	- Programmable - Hart-programmable / SIL2 - Profibus PA - Foundation Fieldbus

Option electrical heat tracing / Page 290

Holding temperature:	~10°C / Frost protection

Option instrument isolation / Page 290 - 291

Isolation:	Armaflex isolation / Rock-wool isolation

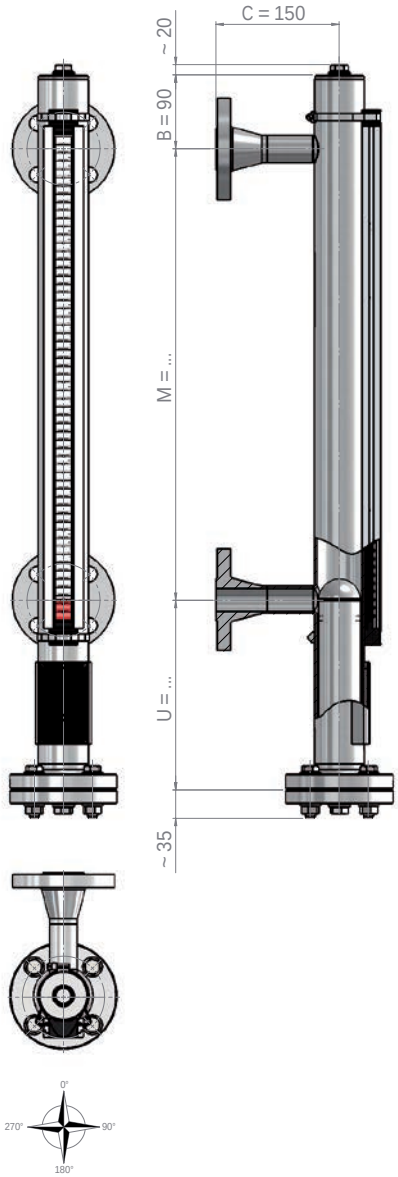

Approvals / Certificates

ATEX*

II 1/2G c IIC T6 - T1 II 2D c IIC T6 - T1

Liquid temperature Ex max. 300°C

The bypass level indicator are based on a modular design and can be arranged individually.
Type key page 236 - 241

* The approval is dependent on the equipment combination

** Depends on the approval

Heinrich Kübler AG
Ruessenstrasse 4 | CH-6340 Baar | Phone +41 (0)41 766 62 62 | Fax +41 (0)41 766 62 63 | E-Mail info@kubler.ch | Internet www.kubler.ch

Type **BNA-..-../../..-M..-V/6../..-MR..-Z..S/..**

Material quality:	1.4404 / 1.4435 / 1.4571 (316L / 316Ti)
Centre distance M:	150 ... 25000 mm
Specific gravity:	≥ 480 kg/m³
Design pressure:	-1 bar ... 63 bar
Design temperature:	-196°C ... 400°C

Design

Chamber:	Ø 60.30 x 2.00 mm Ø 60.33 x 2.77 mm / NACE Ø 60.30 x 3.00 mm
Process connection:	Type key page 236
Chamber end top:	Page 292 - 293
Chamber end bottom:	Page 294 - 295
Float:	Page 270 - 271

Option magnetic roller indicator / Page 274

Aluminium or Stainless steel / Pocan	-40°C ... 200°C
Aluminium or Stainless steel / Ceramic	-40°C ... 400°C

Option scale / Page 275

Aluminium / Stainless steel	With adhesive foil / Engraving / Blank

Option magnetic switch / Page 282 - 289

Aluminium / Stainless steel	-60°C ... 300°C

Option level transmitter / Page 276 - 280

Accuracy / Reed contacts:	5 / 10 / 15 mm
Accuracy / Magnetostrictive:	0.2 mm
Control unit:	- Programmable - Hart-programmable / SIL2 - Profibus PA - Foundation Fieldbus

Option electrical heat tracing / Page 290

Holding temperature:	~10°C / Frost protection

Option instrument isolation / Page 290 - 291

Isolation:	Armaflex isolation / Rock-wool isolation

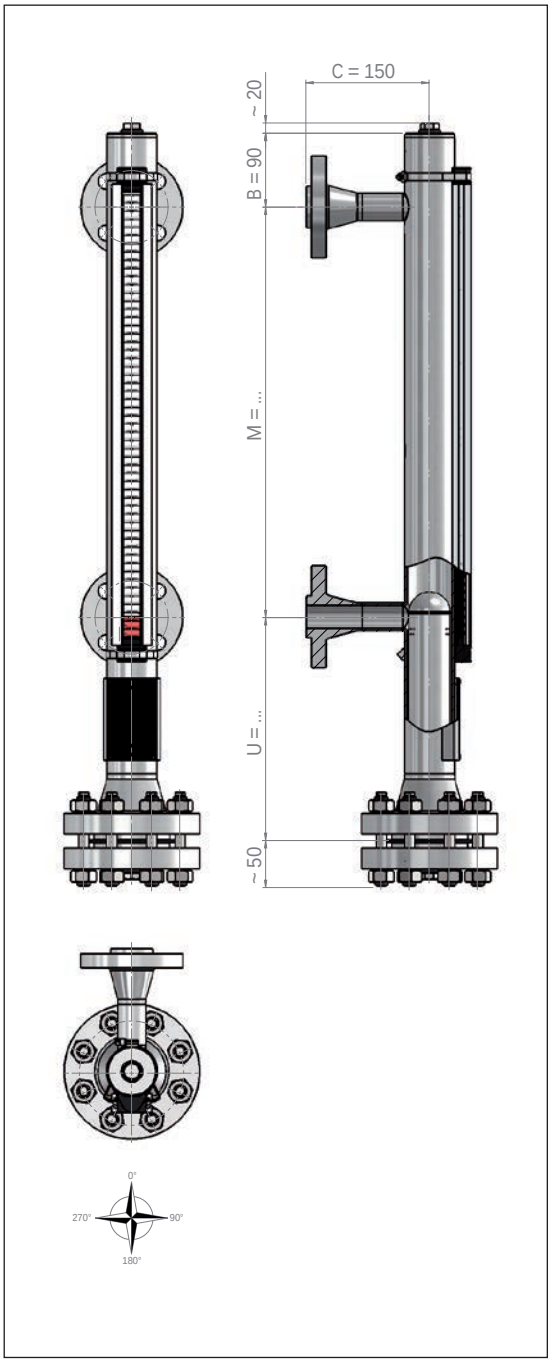

Approvals / Certificates

ATEX*

II 1/2G c IIC T6 - T1 II 2D c IIC T6 - T1

Liquid temperature Ex max. 300°C

The bypass level indicator are based on a modular design and can be arranged individually.
Type key page 236 - 241

* The approval is dependent on the equipment combination

Heinrich Kübler AG
Ruessenstrasse 4 | CH-6340 Baar | Phone +41 (0)41 766 62 62 | Fax +41 (0)41 766 62 63 | E-Mail info@kubler.ch | Internet www.kubler.ch

Type **BNA-..-../../..-M..-V/../..-MR..-Z..S/..**

Material quality:	1.4404 / 1.4435 / 1.4571 (316L / 316Ti)
Centre distance M:	150 ... 25000 mm
Specific gravity:	≥ 390 kg/m³
Design pressure:	-1 bar ... 100 bar
Design temperature:	-196°C ... 400°C

Design	
Chamber:	Ø 60.33 x 2.77 mm / NACE
	Ø 60.30 x 3.00 mm
	Ø 73.03 x .. mm / NACE
	Ø 76.10 x .. mm
Process connection:	Type key page 236
Chamber end top:	Page 292 - 293
Chamber end bottom:	Page 294 - 295
Float:	Page 270 - 271

Option magnetic roller indicator / Page 274	
Aluminium or Stainless steel / Pocan	-40°C ... 200°C
Aluminium or Stainless steel / Ceramic	-40°C ... 400°C

Option scale / Page 275	
Aluminium / Stainless steel	With adhesive foil / Engraving / Blank

Option magnetic switch / Page 282 - 289	
Aluminium / Stainless steel	-60°C ... 300°C

Option level transmitter / Page 276 - 280	
Accuracy / Reed contacts:	5 / 10 / 15 mm
Accuracy / Magnetostrictive:	0.2 mm
Control unit:	- Programmable
	- Hart-programmable / SIL2
	- Profibus PA
	- Foundation Fieldbus

Option electrical heat tracing / Page 290	
Holding temperature:	~10°C / Frost protection

Option instrument isolation / Page 290 - 291	
Isolation:	Armaflex isolation / Rock-wool isolation

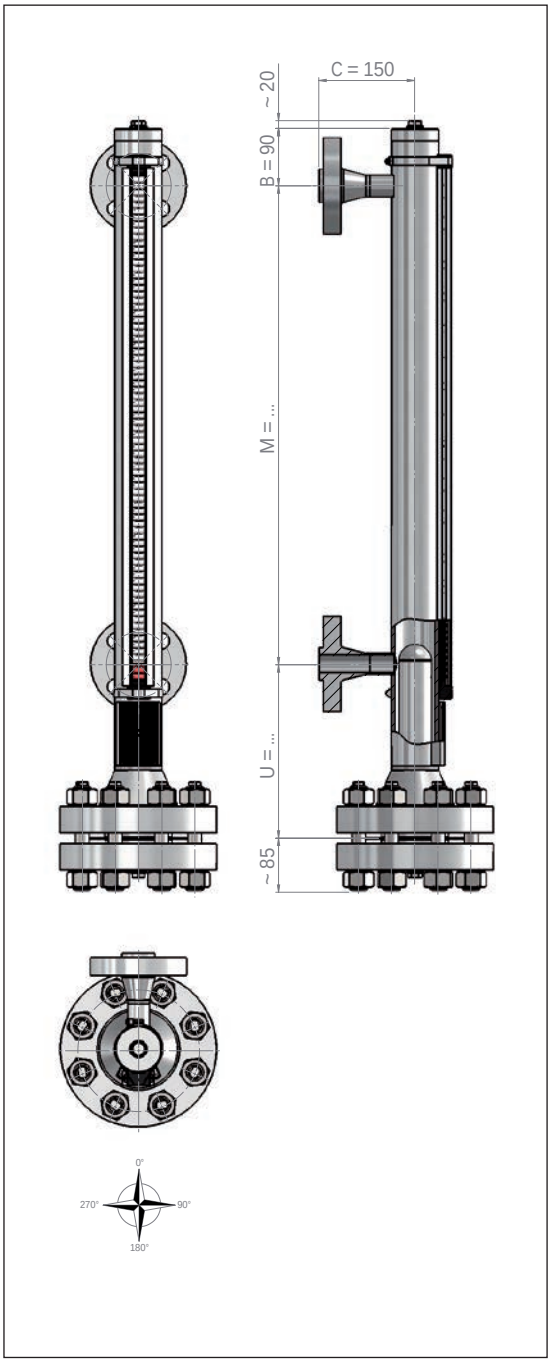

Approvals / Certificates

ATEX*

II 1/2G c IIC T6 - T1 II 2D c IIC T6 - T1

Liquid temperature Ex max. 300°C

The bypass level indicator are based on a modular design and can be arranged individually.
Type key page 236 - 241

* The approval is dependent on the equipment combination

Heinrich Kübler AG
Ruessenstrasse 4 | CH-6340 Baar | Phone +41 (0)41 766 62 62 | Fax +41 (0)41 766 62 63 | E-Mail info@kubler.ch | Internet www.kubler.ch

Type **BNA-..-../../..-M..-V/7../..-MR..-Z..S/..**

Material quality:	1.4404 / 1.4435 / 1.4571 (316L / 316Ti)
Centre distance M:	150 ... 25000 mm
Specific gravity:	≥ 480 kg/m³
Design pressure:	-1 bar ... 160 bar
Design temperature:	-196°C ... 400°C

Design

Chamber:	Ø 73.03 x .. mm / NACE Ø 76.10 x .. mm (.. wall thickness acc. to calculation)
Process connection:	Type key page 236
Chamber end top:	Page 292 - 293
Chamber end bottom:	Page 294 - 295
Float:	Page 270 - 271

Option magnetic roller indicator / Page 274

Aluminium or Stainless steel / Pocan	-40°C ... 200°C
Aluminium or Stainless steel / Ceramic	-40°C ... 400°C

Option scale / Page 275

Aluminium / Stainless steel	With adhesive foil / Engraving / Blank

Option magnetic switch / Page 282 - 289

Aluminium / Stainless steel	-60°C ... 300°C

Option level transmitter / Page 276 - 280

Accuracy / Reed contacts:	5 / 10 / 15 mm
Accuracy / Magnetostrictive:	0.2 mm
Control unit:	- Programmable - Hart-programmable / SIL2 - Profibus PA - Foundation Fieldbus

Option electrical heat tracing / Page 290

Holding temperature:	~10°C / Frost protection

Option instrument isolation / Page 290 - 291

Isolation:	Armaflex isolation / Rock-wool isolation

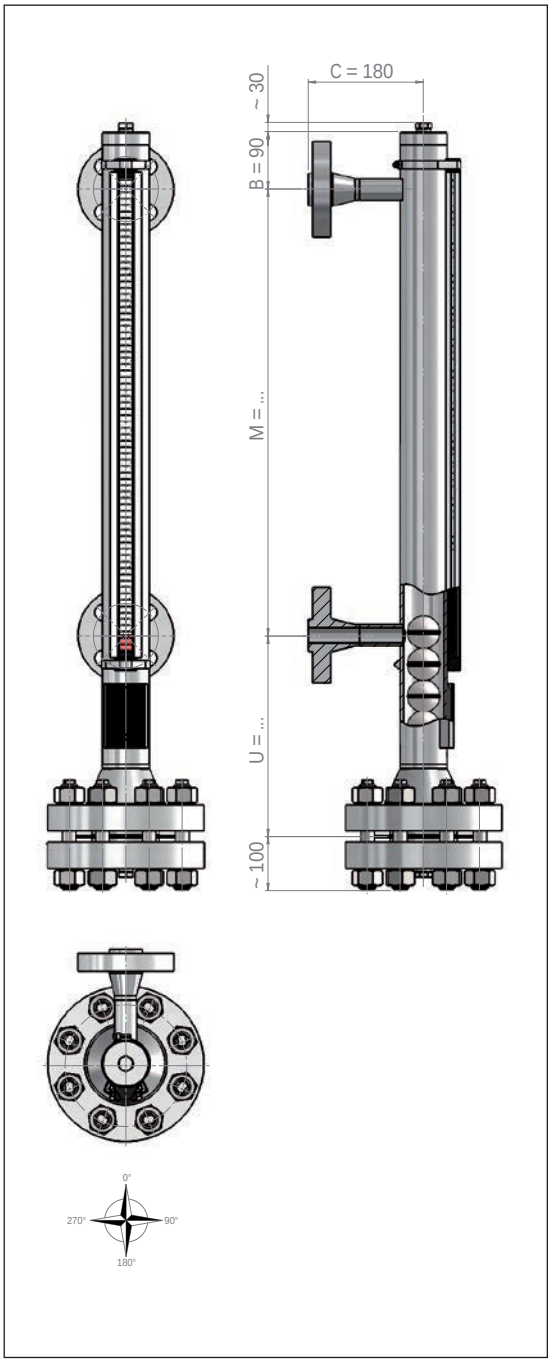

Approvals / Certificates

ATEX*

II 1/2G c IIC T6 - T1 II 2D c IIC T6 - T1

Liquid temperature Ex max. 300°C

The bypass level indicator are based on a modular design and can be arranged individually.
Type key page 236 - 241

* The approval is dependent on the equipment combination

Heinrich Kübler AG
Ruessenstrasse 4 | CH-6340 Baar | Phone +41 (0)41 766 62 62 | Fax +41 (0)41 766 62 63 | E-Mail info@kubler.ch | Internet www.kubler.ch

Type **BNA-..-../../..-M..-V/7../..-MR..-Z..S/..**

Material quality:	1.4404 / 1.4435 / 1.4571 (316L / 316Ti)
Centre distance M:	150 ... 25000 mm
Specific gravity:	≥ 690 kg/m³
Design pressure:	-1 bar ... 250 / 400 bar
Design temperature:	-196°C ... 400°C

Design

Chamber:	Ø 73.03 x .. mm / NACE Ø 76.10 x .. mm (.. wall thickness acc. to calculation)
Process connection:	Type key page 236
Chamber end top:	Page 292 - 293
Chamber end bottom:	Page 294 - 295
Float:	Page 271

Option magnetic roller indicator / Page 274

Aluminium or Stainless steel / Pocan	-40°C ... 200°C
Aluminium or Stainless steel / Ceramic	-40°C ... 400°C

Option scale / Page 275

Aluminium / Stainless steel	With adhesive foil / Engraving / Blank

Option magnetic switch / Page 282 - 289

Aluminium / Stainless steel	-60°C ... 300°C

Option level transmitter / Page 276 - 280

Accuracy / Reed contacts:	5 / 10 / 15 mm
Accuracy / Magnetostrictive:	0.2 mm
Control unit:	- Programmable - Hart-programmable / SIL2 - Profibus PA - Foundation Fieldbus

Option electrical heat tracing / Page 290

Holding temperature:	~10°C / Frost protection

Option instrument isolation / Page 290 - 291

Isolation:	Armaflex isolation / Rock-wool isolation

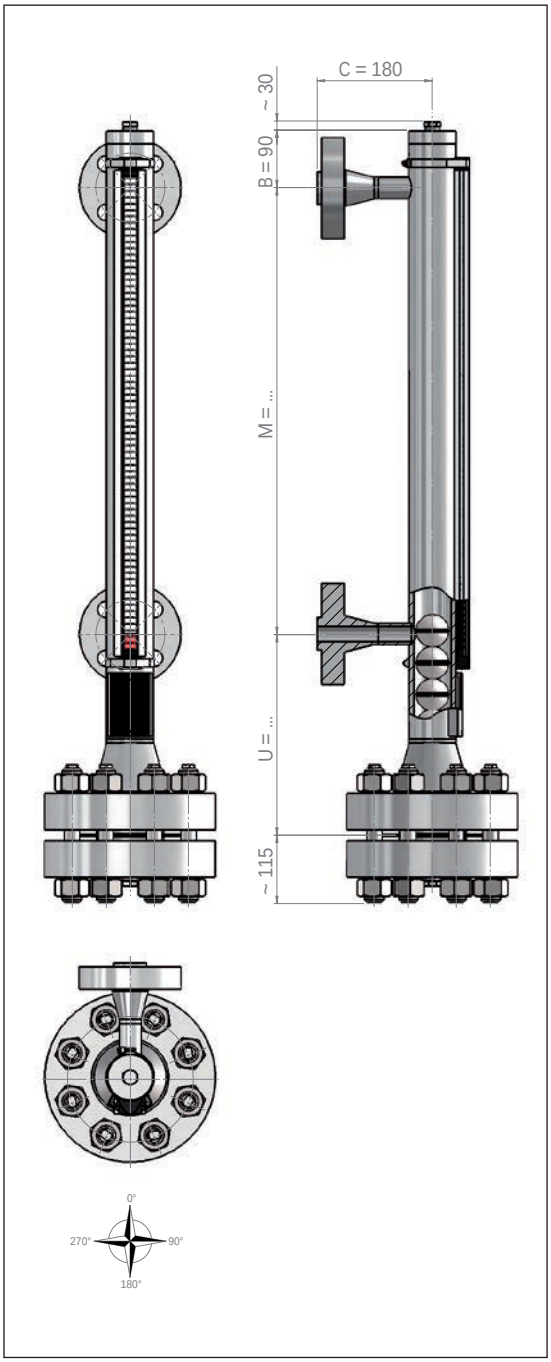

Approvals / Certificates

ATEX*

II 1/2G c IIC T6 - T1 II 2D c IIC T6 - T1

Liquid temperature Ex max. 300°C

The bypass level indicator are based on a modular design and can be arranged individually.
Type key page 236 - 241

* The approval is dependent on the equipment combination

Type **BNA-OS-L..-V/60/..-MR..-Z..S/..**

Material quality:	1.4404 / 1.4435 / 1.4571 (316L / 316Ti)
Length of instrument L:	150 ... 25000 mm**
Specific gravity:	≥ 400 kg/m³
Design pressure:	-1 bar ... 40 bar
Design temperature:	-196°C ... 400°C

Design

Chamber:	Ø 60.30 x 2.00 mm Ø 60.33 x 2.77 mm / NACE Ø 63.50 x 2.00 mm
Process connection:	-
Chamber end top:	Page 292 - 293
Chamber end bottom:	Page 294 - 295
Float:	Page 266 - 268

Option magnetic roller indicator / Page 274

Aluminium or Stainless steel / Pocan	-40°C ... 200°C
Aluminium or Stainless steel / Ceramic	-40°C ... 400°C

Option scale / Page 275

Aluminium / Stainless steel	With adhesive foil / Engraving / Blank

Option magnetic switch / Page 282 - 289

Aluminium / Stainless steel	-60°C ... 300°C

Option level transmitter / Page 276 - 280

Accuracy / Reed contacts:	5 / 10 / 15 mm
Accuracy / Magnetostrictive:	0.2 mm
Control unit:	- Programmable - Hart-programmable / SIL2 - Profibus PA - Foundation Fieldbus

Option electrical heat tracing / Page 290

Holding temperature:	~10°C / Frost protection

Option instrument isolation / Page 290 - 291

Isolation:	Armaflex isolation / Rock-wool isolation

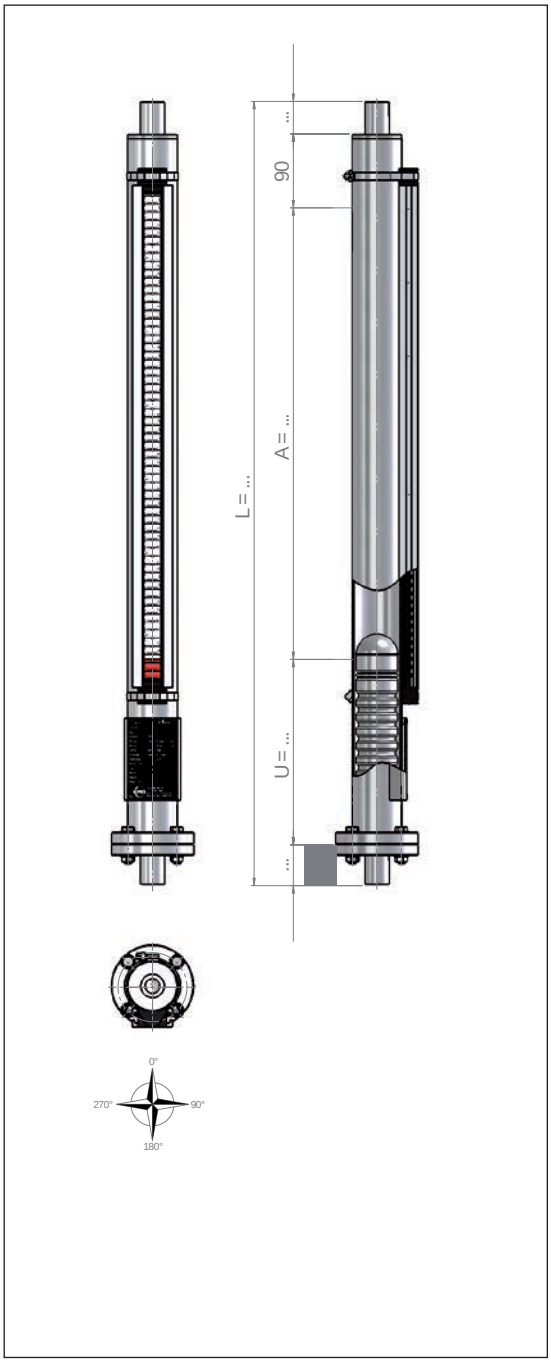

Approvals / Certificates

ATEX*

II 1/2G c IIC T6 - T1 II 2D c IIC T6 - T1

Liquid temperature Ex max. 300°C

The bypass level indicator are based on a modular design and can be arranged individually.

Type key page 236 - 241

* The approval is dependent on the equipment combination

** Depends on the approval

Heinrich Kübler AG
Ruessenstrasse 4 | CH-6340 Baar | Phone +41 (0)41 766 62 62 | Fax +41 (0)41 766 62 63 | E-Mail info@kubler.ch | Internet www.kubler.ch

Type **BNA-..-../../..-M..-V/88/..-MR..-Z..S/..**

Material quality:	1.4404 / 1.4435 / 1.4571 (316L / 316Ti)
Centre distance M:	150 ... 25000 mm**
Specific gravity:	≥ 460 kg/m³
Design pressure:	-1 bar ... 40 bar
Design temperature:	-196°C ... 400°C

Design

Chamber:	Ø 88.90 x 2.00 mm Ø 88.90 x 2.60 mm Ø 88.90 x 3.05 mm / NACE
Process connection:	Type key page 236
Chamber end top:	Page 292 - 293
Chamber end bottom:	Page 294 - 295
Float:	Page 266 - 268

Option magnetic roller indicator / Page 274

Aluminium or Stainless steel / Pocan	-40°C ... 200°C
Aluminium or Stainless steel / Ceramic	-40°C ... 400°C

Option scale / Page 275

Aluminium / Stainless steel	With adhesive foil / Engraving / Blank

Option magnetic switch / Page 282 - 289

Aluminium / Stainless steel	-60°C ... 300°C

Option level transmitter / Page 276 - 280

Accuracy / Reed contacts:	5 / 10 / 15 mm
Accuracy / Magnetostrictive:	0.2 mm
Control unit:	- Programmable - Hart-programmable / SIL2 - Profibus PA - Foundation Fieldbus

Option electrical heat tracing / Page 290

Holding temperature:	~10°C / Frost protection

Option instrument isolation / Page 290 - 291

Isolation:	Armaflex isolation / Rock-wool isolation

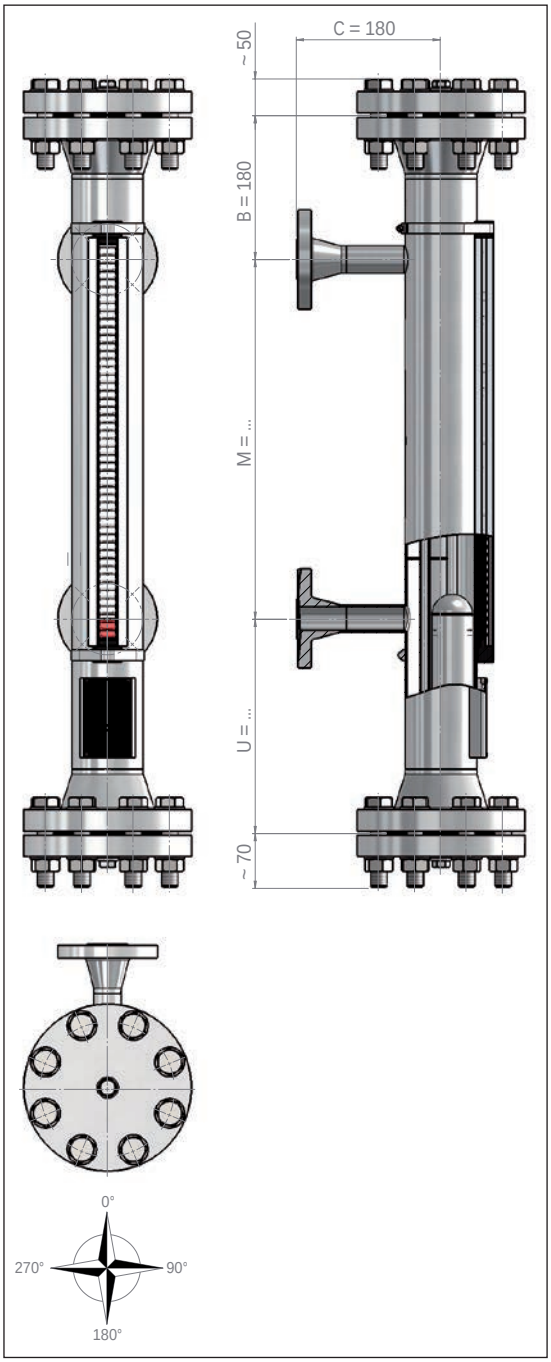

Approvals / Certificates

ATEX*

II 1/2G c IIC T6 - T1 II 2D c IIC T6 - T1

Liquid temperature Ex max. 300°C

The bypass level indicator are based on a modular design and can be arranged individually.
Type key page 236 - 241

* The approval is dependent on the equipment combination

** Depends on the approval

Heinrich Kübler AG
Ruessenstrasse 4 | CH-6340 Baar | Phone +41 (0)41 766 62 62 | Fax +41 (0)41 766 62 63 | E-Mail info@kubler.ch | Internet www.kubler.ch

Type **BNA-..-../../..-M..-V/60/..-HM76-MR..-Z..S/..**

Material quality:	1.4404 / 1.4435 / 1.4571 (316L / 316Ti)
Centre distance M:	150 ... 25000 mm**
Specific gravity:	≥ 460 kg/m³
Design pressure:	-1 bar ... 40 bar
Design temperature:	-196°C ... 400°C

Design

Chamber:	Ø 60.30 x 2.00 mm Ø 60.33 x 2.77 mm / NACE Ø 63.50 x 2.00 mm
Process connection:	Type key page 236
Chamber end top:	Page 292 - 293
Chamber end bottom:	Page 294 - 295
Float:	Page 272 - 273

Option magnetic roller indicator / Page 274

Aluminium or Stainless steel / Pocan	-40°C ... 200°C
Aluminium or Stainless steel / Ceramic	-40°C ... 400°C

Option scale / Page 275

Aluminium / Stainless steel	With adhesive foil / Engraving / Blank

Option magnetic switch / Page 282 - 289

Aluminium / Stainless steel	-60°C ... 300°C

Option level transmitter / Page 276 - 280

Accuracy / Reed contacts:	5 / 10 / 15 mm
Accuracy / Magnetostrictive:	0.2 mm
Control unit:	- Programmable - Hart-programmable / SIL2 - Profibus PA - Foundation Fieldbus

Steam tracing system

Steam tracing system chamber:	Ø 76.10 x 2.00 mm

Option instrument isolation / Page 290 - 291

Isolation:	Armaflex isolation / Rock-wool isolation

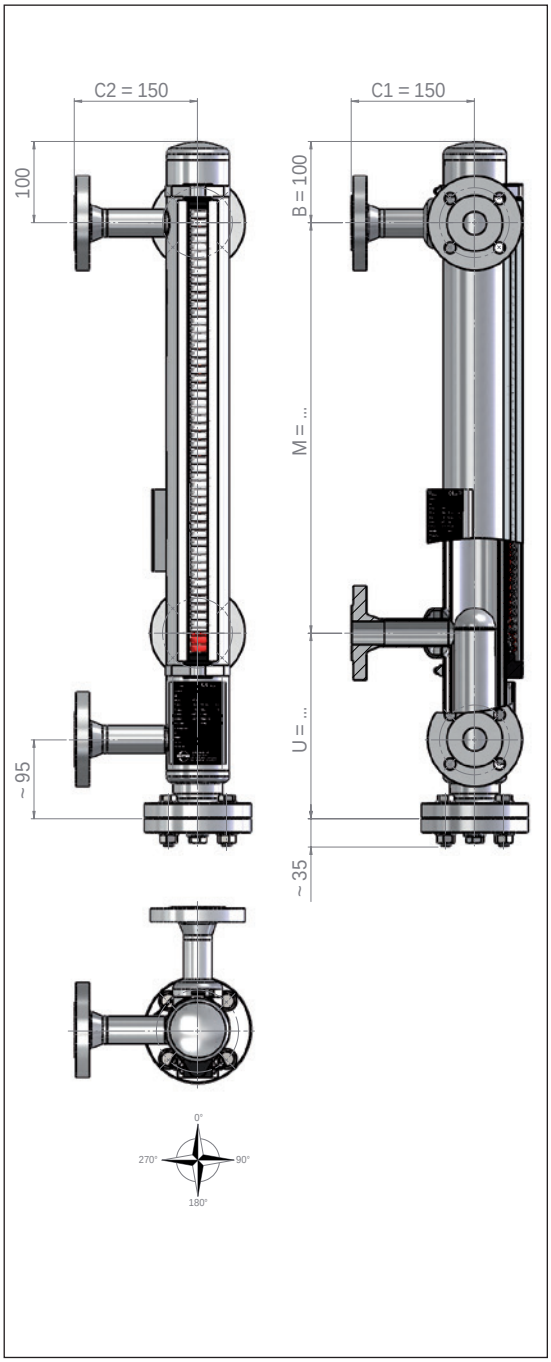

Approvals / Certificates

ATEX*

II 1/2G c IIC T6 - T1 II 2D c IIC T6 - T1

Liquid temperature Ex max. 300°C

The bypass level indicator are based on a modular design and can be arranged individually.
Type key page 236 - 241

* The approval is dependent on the equipment combination

** Depends on the approval

Heinrich Kübler AG
Ruessenstrasse 4 | CH-6340 Baar | Phone +41 (0)41 766 62 62 | Fax +41 (0)41 766 62 63 | E-Mail info@kubler.ch | Internet www.kubler.ch

Type **BNA-..-../../..-M..-V/../..-DK-MR..-Z..S/..**

Material quality:	1.4404 / 1.4435 / 1.4571 (316L / 316Ti)
Centre distance M:	150 ... 25000 mm**
Specific gravity:	≥ 350 kg/m³
Design pressure:	-1 bar ... 250 bar
Design temperature:	-10°C ... 400°C

Design	
Chamber:	Ø 60.30 x 2.00 mm
	Ø 60.33 x 2.77 mm / NACE
	Ø 73.03 x .. mm / NACE
	Ø 76.10 x .. mm
Process connection:	Type key page 236
Chamber end top:	Flanged connection with tube cap
Chamber end bottom:	Page 294 - 295
Float:	Acc. to protocol

Option magnetic roller indicator / Page 274	
Aluminium or Stainless steel / Pocan	-40°C ... 200°C
Aluminium or Stainless steel / Ceramic	-40°C ... 400°C

Option scale / Page 275	
Aluminium / Stainless steel	With adhesive foil / Engraving / Blank

Option magnetic switch / Page 282 - 289	
Aluminium / Stainless steel	-60°C ... 300°C

Option level transmitter / Page 276 - 280	
Accuracy / Reed contacts:	5 / 10 / 15 mm
Accuracy / Magnetostrictive:	0.2 mm
Control unit:	- Programmable
	- Hart-programmable / SIL2
	- Profibus PA
	- Foundation Fieldbus

Option electrical heat tracing / Page 290	
Holding temperature:	~10°C / Frost protection

Option instrument isolation / Page 290 - 291	
Isolation:	Armaflex isolation / Rock-wool isolation

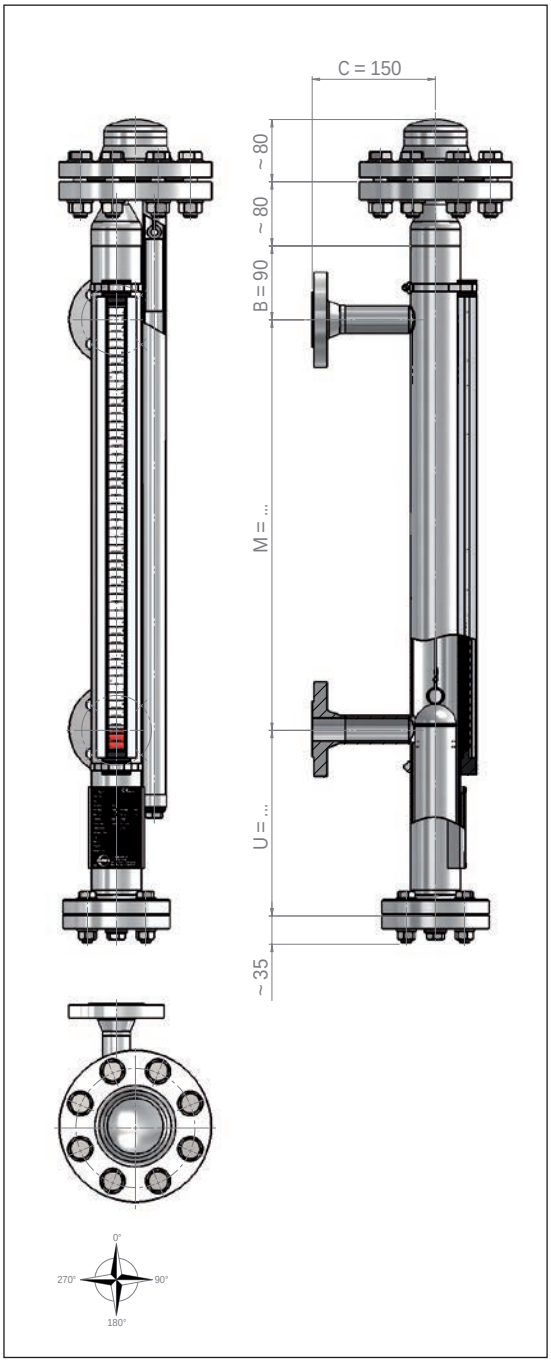

Approvals / Certificates

ATEX*

II 1/2G c IIC T6 - T1 II 2D c IIC T6 - T1

Liquid temperature Ex max. 300°C

The bypass level indicator are based on a modular design and can be arranged individually.
Type key page 236 - 241

* The approval is dependent on the equipment combination

** Depends on the approval

Heinrich Kübler AG
Ruessenstrasse 4 | CH-6340 Baar | Phone +41 (0)41 766 62 62 | Fax +41 (0)41 766 62 63 | E-Mail info@kubler.ch | Internet www.kubler.ch

Type **BNA-..-../../..-M..-TI/60/2.77-MR..-Z..S/..**

Material quality:	Titanium
Centre distance M:	150 ... 25000 mm**
Specific gravity:	≥ 400 kg/m³
Design pressure:	-1 bar ... 40 bar
Design temperature:	-10°C ... 300°C

Design

Chamber:	Ø 60.30 x 2.77 mm
Process connection:	Type key page 236
Chamber end top:	Page 292 - 293
Chamber end bottom:	Page 294 - 295
Float:	Page 267 / 268

Option magnetic roller indicator / Page 274

Aluminium or Stainless steel / Pocan	-40°C ... 200°C
Aluminium or Stainless steel / Ceramic	-40°C ... 400°C

Option scale / Page 275

Aluminium / Stainless steel	With adhesive foil / Engraving / Blank

Option magnetic switch / Page 282 - 289

Aluminium / Stainless steel	-60°C ... 300°C

Option level transmitter / Page 276 - 280

Accuracy / Reed contacts:	5 / 10 / 15 mm
Accuracy / Magnetostrictive:	0.2 mm
Control unit:	- Programmable - Hart-programmable / SIL2 - Profibus PA - Foundation Fieldbus

Option electrical heat tracing / Page 290

Holding temperature:	~10°C / Frost protection

Option instrument isolation / Page 290 - 291

Isolation:	Armaflex isolation / Rock-wool isolation

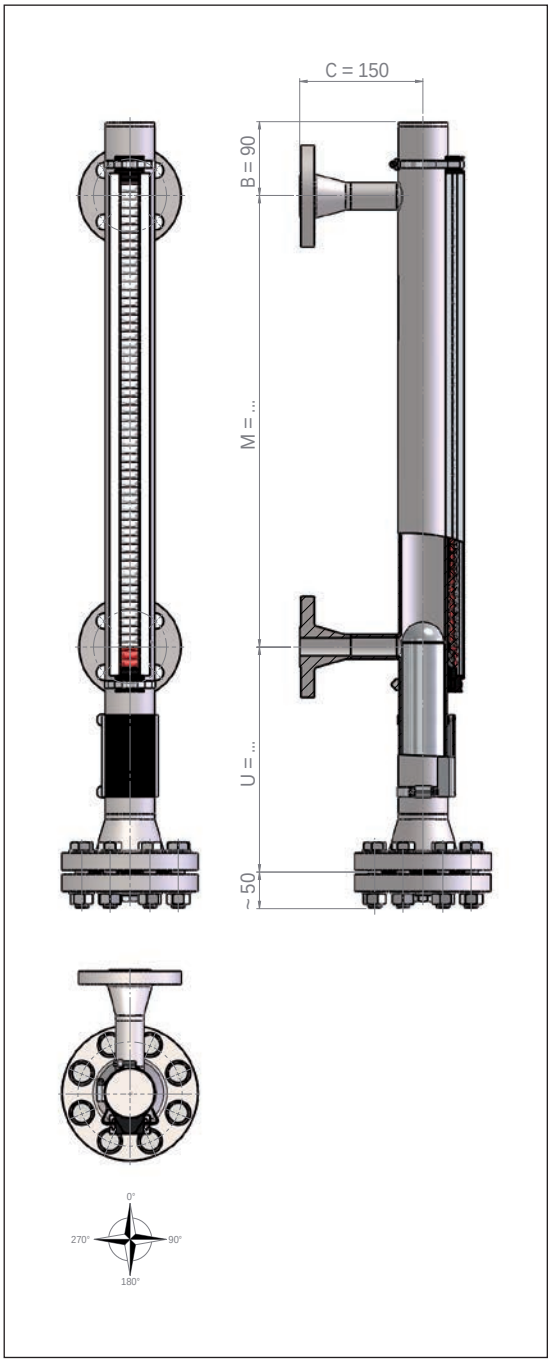

Approvals / Certificates

ATEX*

II 1/2G c IIC T6 - T1 II 2D c IIC T6 - T1

Liquid temperature Ex max. 300°C

The bypass level indicator are based on a modular design and can be arranged individually.
Type key page 236 - 241

* The approval is dependent on the equipment combination

** Depends on the approval

Heinrich Kübler AG
Ruessenstrasse 4 | CH-6340 Baar | Phone +41 (0)41 766 62 62 | Fax +41 (0)41 766 62 63 | E-Mail info@kubler.ch | Internet www.kubler.ch

Type **BNA-..-../../..-M..-HC/60/2.77-MR..-Z..S/..**

Material quality:	Alloy C
Centre distance M:	150 ... 25000 mm**
Specific gravity:	≥ 610 kg/m³
Design pressure:	-1 bar ... 40 bar
Design temperature:	-196°C ... 200°C

Design

Chamber:	Ø 60.33 x 2.77 mm
Process connection:	Type key page 236
Chamber end top:	Page 292 - 293
Chamber end bottom:	Page 294 - 295
Float:	Page 267 / 269

Option magnetic roller indicator / Page 274

Aluminium or Stainless steel / Pocan	-40°C ... 200°C
Aluminium or Stainless steel / Ceramic	-40°C ... 400°C

Option scale / Page 275

Aluminium / Stainless steel	With adhesive foil / Engraving / Blank

Option magnetic switch / Page 282 - 289

Aluminium / Stainless steel	-60°C ... 300°C

Option level transmitter / Page 276 - 280

Accuracy / Reed contacts:	5 / 10 / 15 mm
Accuracy / Magnetostrictive:	0.2 mm
Control unit:	- Programmable - Hart-programmable / SIL2 - Profibus PA - Foundation Fieldbus

Option electrical heat tracing / Page 290

Holding temperature:	~10°C / Frost protection

Option instrument isolation / Page 290 - 291

Isolation:	Armaflex isolation / Rock-wool isolation

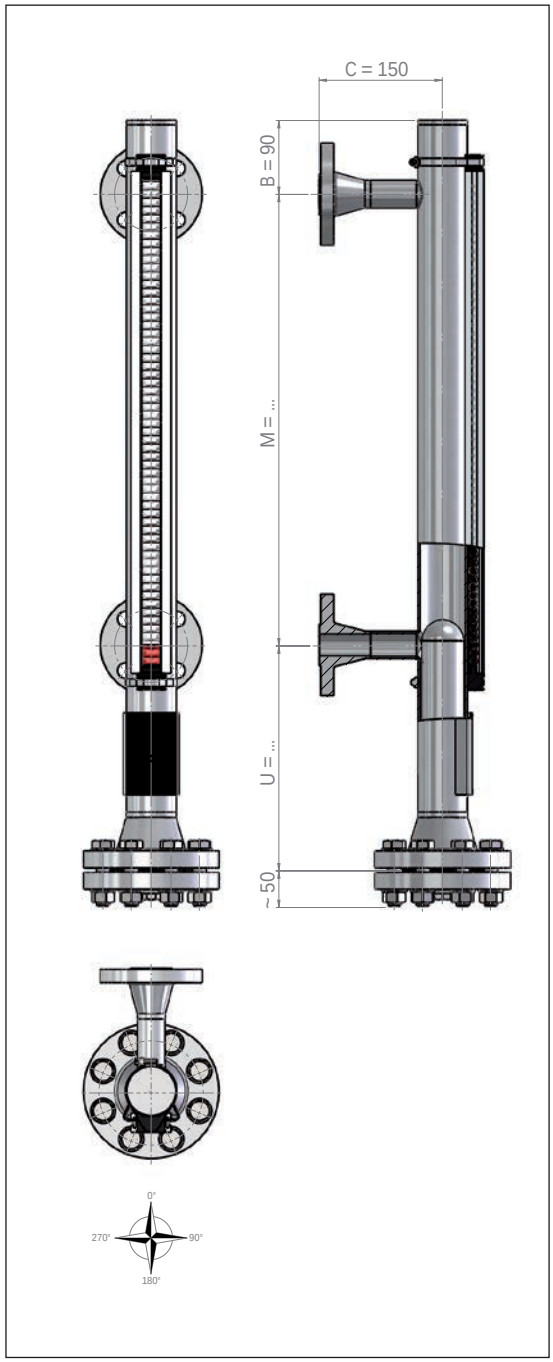

Approvals / Certificates

ATEX*

II 1/2G c IIC T6 - T1 II 2D c IIC T6 - T1

Liquid temperature Ex max. 200°C

The bypass level indicator are based on a modular design and can be arranged individually.
Type key page 236 - 241

* The approval is dependent on the equipment combination

** Depends on the approval

Heinrich Kübler AG
Ruessenstrasse 4 | CH-6340 Baar | Phone +41 (0)41 766 62 62 | Fax +41 (0)41 766 62 63 | E-Mail info@kubler.ch | Internet www.kubler.ch

Type **BNA-..-../../..-M..-P/32/1.8-ZPSS/24/../M2**

Material quality:	PVC transparent
Centre distance M:	200 ... 4000 mm
Specific gravity:	≥ 600 kg/m³
Design pressure:	-1 bar ... 1 bar
Design temperature:	-15°C ... 60°C

Design

Chamber:	Ø 32.0 x 1.8 mm
Process connection:	Type key page 236
Chamber end top:	Screwed connection
Chamber end bottom:	Screwed connection
Float:	ZPSS24/80/M2 ≥ 900 kg/m³
	ZPSS24/120/M2 ≥ 600 kg/m³

Option magnetic switch

PS32/…/…/PVC/…

Electrical connection:	PVC connection cable
Function:	Normally open (NO)
Switch behaviour:	Bistable
Switching capacity:	230 V / 0.5 A / 40 VA

PO32/…/…/PVC/…

Electrical connection:	PVC connection cable
Function:	Normally closed (NC)
Switch behaviour:	Bistable
Switching capacity:	230 V / 0.5 A / 40 VA

PU32/…/…/PVC/…

Electrical connection:	PVC connection cable
Function:	Change over (SPDT)
Switch behaviour:	Bistable
Switching capacity:	230 V / 0.5 A / 40 VA

PU32ASH/…

Electrical connection:	Connector Hirschmann DIN 43650
Function:	Change over (SPDT)
Switch behaviour:	Bistable
Switching capacity:	230 V / 0.5 A / 40 VA

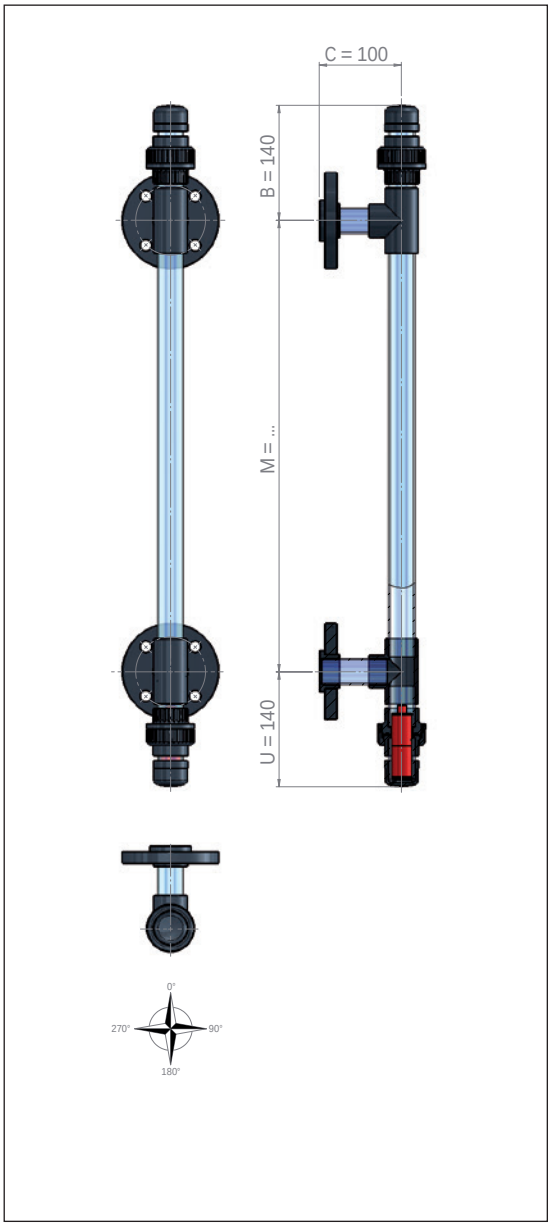

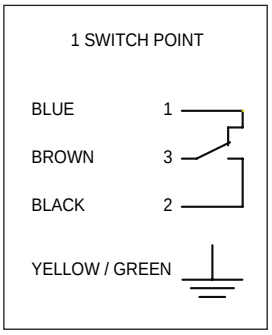

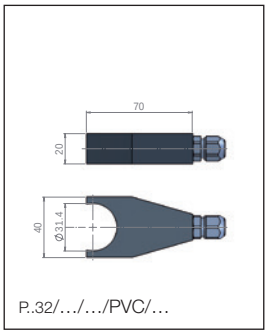

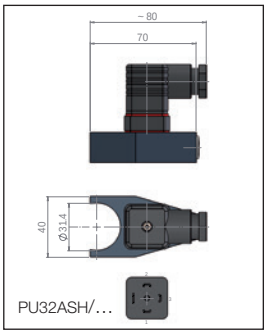

Approvals / Certificates

The bypass level indicator are based on a modular design and can be arranged individually.
Type key page 236 - 241

Heinrich Kübler AG
Ruessenstrasse 4 | CH-6340 Baar | Phone +41 (0)41 766 62 62 | Fax +41 (0)41 766 62 63 | E-Mail info@kubler.ch | Internet www.kubler.ch

Type **BNA-..-../../..-M..-P/63/3-MR..-ZPS/..**

Material quality:	PVC
Centre distance M:	300 ... 4000 mm
Specific gravity:	≥ 740 kg/m³
Design pressure:	-1 bar ... 4 bar
Design temperature:	-15°C ... 40°C

Design

Chamber:	Ø 63.00 x 3.00 mm
Process connection:	Type key page 236
Chamber end top:	Screwed connection
Chamber end bottom:	Screwed connection
Float:	Page 264

Option magnetic roller indicator / Page 274

Aluminium or Stainless steel / Pocan	-40°C ... 200°C
Aluminium or Stainless steel / Ceramic	-40°C ... 400°C

Option scale / Page 275

Aluminium / Stainless steel	With adhesive foil / Engraving / Blank

Option magnetic switch / Page 282 - 289

Aluminium / Stainless steel	-60°C ... 300°C

Option level transmitter / Page 276 - 280

Accuracy / Reed contacts:	5 / 10 / 15 mm
Accuracy / Magnetostrictive:	0.2 mm
Control unit:	- Programmable - Hart-programmable / SIL2 - Profibus PA - Foundation Fieldbus

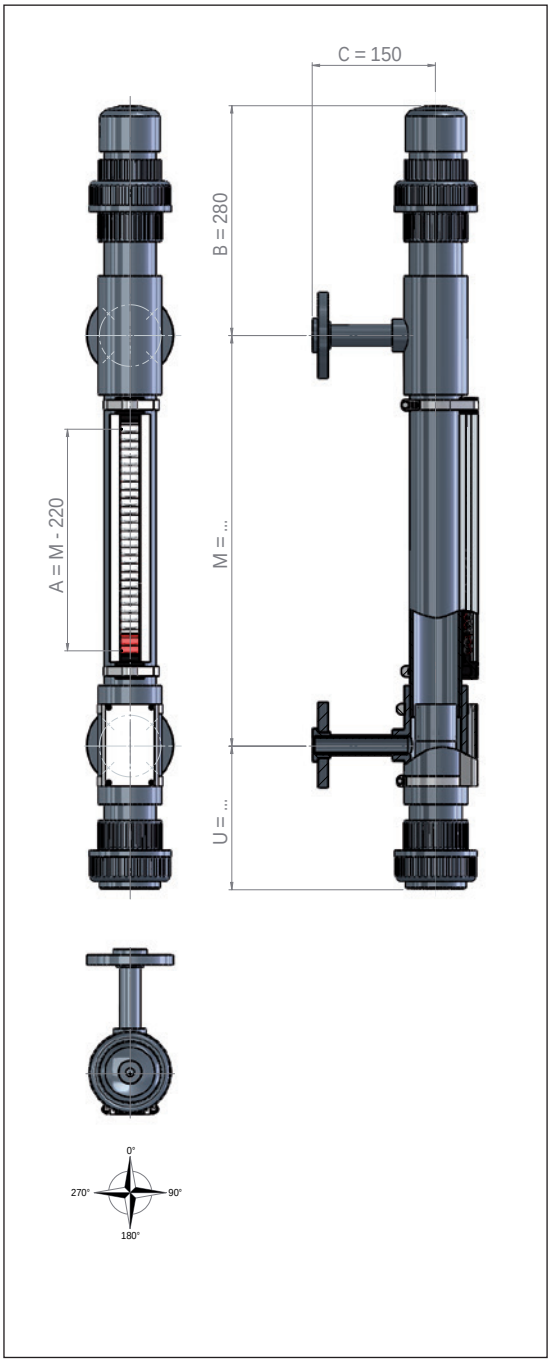

Approvals / Certificates

The bypass level indicator are based on a modular design and can be arranged individually.
Type key page 236 - 241

Type **BNA-..-../../..-M..-PP/63/3.6-MR..-ZPPS/..**

Material quality:	Polypropylene
Centre distance M:	300 ... 4000 mm
Specific gravity:	≥ 640 kg/m³
Design pressure:	-1 bar ... 4 bar
Design temperature:	-10°C ... 60°C

Design

Chamber:	Ø 63.00 x 3.60 mm
Process connection:	Type key page 236
Chamber end top:	Screwed connection
Chamber end bottom:	Screwed connection
Float:	Page 264

Option magnetic roller indicator / Page 274

Aluminium or Stainless steel / Pocan	-40°C ... 200°C
Aluminium or Stainless steel / Ceramic	-40°C ... 400°C

Option scale / Page 275

Aluminium / Stainless steel	With adhesive foil / Engraving / Blank

Option magnetic switch / Page 282 - 289

Aluminium / Stainless steel	-60°C ... 300°C

Option level transmitter / Page 276 - 280

Accuracy / Reed contacts:	5 / 10 / 15 mm
Accuracy / Magnetostrictive:	0.2 mm
Control unit:	- Programmable - Hart-programmable / SIL2 - Profibus PA - Foundation Fieldbus

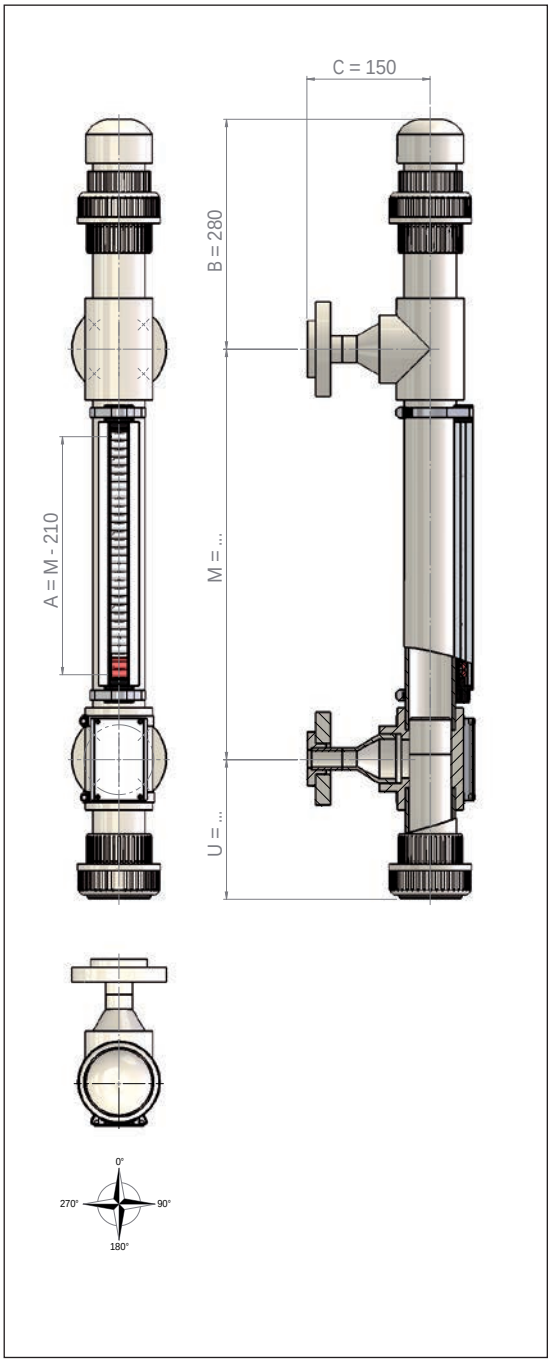

Approvals / Certificates

The bypass level indicator are based on a modular design and can be arranged individually.
Type key page 236 - 241

Heinrich Kübler AG
Ruessenstrasse 4 | CH-6340 Baar | Phone +41 (0)41 766 62 62 | Fax +41 (0)41 766 62 63 | E-Mail info@kubler.ch | Internet www.kubler.ch

Type **BNA-..-../../..-M..-PF/63/3-MR..-ZPFS/..**

Material quality:	PVDF
Centre distance M:	300 ... 4000 mm
Specific gravity:	≥ 750 kg/m³
Design pressure:	-1 bar ... 4 bar
Design temperature:	-10°C ... 80°C

Design

Chamber:	Ø 63.00 x 3.00 mm
Process connection:	Type key page 236
Chamber end top:	Screwed connection
Chamber end bottom:	Screwed connection
Float:	Page 265

Option magnetic roller indicator / Page 274

Aluminium or Stainless steel / Pocan	-40°C ... 200°C
Aluminium or Stainless steel / Ceramic	-40°C ... 400°C

Option scale / Page 275

Aluminium / Stainless steel	With adhesive foil / Engraving / Blank

Option magnetic switch / Page 282 - 289

Aluminium / Stainless steel	-60°C ... 300°C

Option level transmitter / Page 276 - 280

Accuracy / Reed contacts:	5 / 10 / 15 mm
Accuracy / Magnetostrictive:	0.2 mm
Control unit:	- Programmable - Hart-programmable / SIL2 - Profibus PA - Foundation Fieldbus

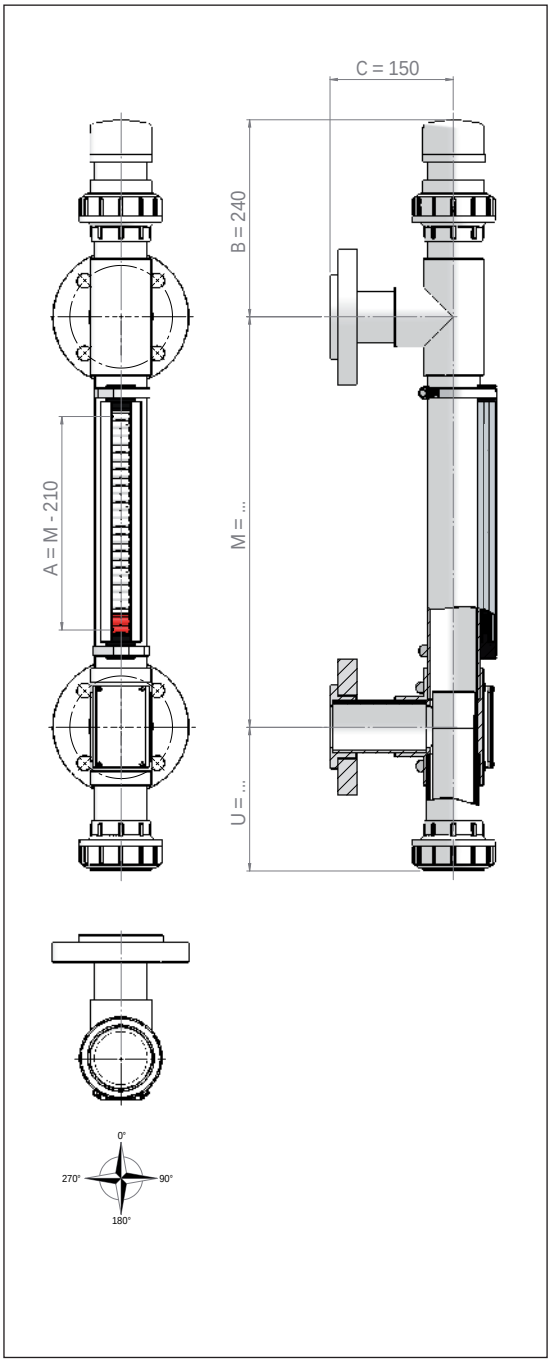

Approvals / Certificates

The bypass level indicator are based on a modular design and can be arranged individually.
Type key page 236 - 241

Heinrich Kübler AG
Ruessenstrasse 4 | CH-6340 Baar | Phone +41 (0)41 766 62 62 | Fax +41 (0)41 766 62 63 | E-Mail info@kubler.ch | Internet www.kubler.ch

Type **BNA-..-../../..-M..-VEEC/63/2-MR..-ZVEECSSA/.../B152**

Material quality:	Stainless steel ECTFE coated
Centre distance M:	150 ... 3000 mm
Specific gravity:	≥ 690 kg/m³
Design pressure:	-1 bar ... 16 bar
Design temperature:	-78°C ... 150°C

Design

Chamber:	Ø 63.50 x 2.00 mm
Process connection:	Type key page 236
Chamber end top:	Flanged connection
Chamber end bottom:	Flanged connection
Float:	Page 266

Option magnetic roller indicator / Page 274

Aluminium or Stainless steel / Pocan	-40°C ... 200°C
Aluminium or Stainless steel / Ceramic	-40°C ... 400°C

Option scale / Page 275

Aluminium / Stainless steel	With adhesive foil / Engraving / Blank

Option magnetic switch / Page 282 - 289

Aluminium / Stainless steel	-60°C ... 300°C

Option level transmitter / Page 276 - 280

Accuracy / Reed contacts:	5 / 10 / 15 mm
Accuracy / Magnetostrictive:	0.2 mm
Control unit:	- Programmable - Hart-programmable / SIL2 - Profibus PA - Foundation Fieldbus

Option electrical heat tracing / Page 290

Holding temperature:	~10°C / Frost protection

Option instrument isolation / Page 290 - 291

Isolation:	Armaflex isolation / Rock-wool isolation

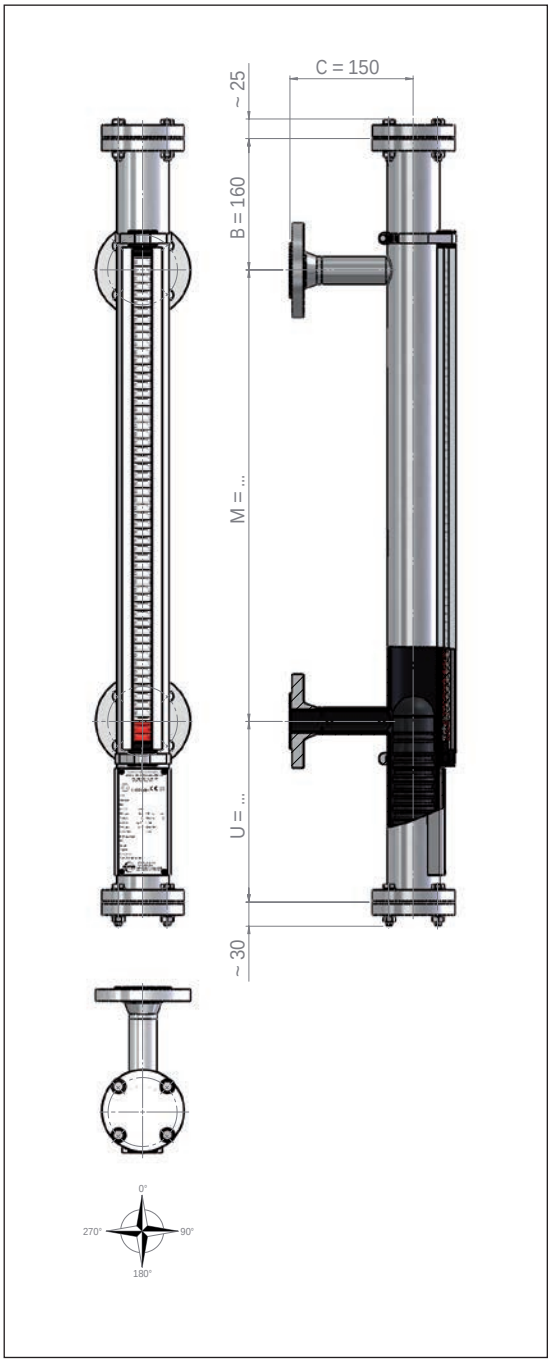

Approvals / Certificates

ATEX*

II 1/2G c IIC T6 - T1 II 2D c IIC T6 - T1

Liquid temperature Ex max. 150°C

The bypass level indicator are based on a modular design and can be arranged individually.
Type key page 236 - 241

* The approval is dependent on the equipment combination

Heinrich Kübler AG
Ruessenstrasse 4 | CH-6340 Baar | Phone +41 (0)41 766 62 62 | Fax +41 (0)41 766 62 63 | E-Mail info@kubler.ch | Internet www.kubler.ch

Type **BNA-..-../../..-M..-VPFA/63/2-MR..-ZVPFASSA/.../B152**

Material quality:	Stainless steel PFA coated
Centre distance M:	150 ... 3000 mm
Specific gravity:	≥ 715 kg/m³
Design pressure:	-1 bar ... 16 bar
Design temperature:	-100°C ... 250°C

Design

Chamber:	Ø 63.50 x 2.00 mm
Process connection:	Type key page 236
Chamber end top:	Flanged connection
Chamber end bottom:	Flanged connection
Float:	Page 266

Option magnetic roller indicator / Page 274

Aluminium or Stainless steel / Pocan	-40°C ... 200°C
Aluminium or Stainless steel / Ceramic	-40°C ... 400°C

Option scale / Page 275

Aluminium / Stainless steel	With adhesive foil / Engraving / Blank

Option magnetic switch / Page 282 - 289

Aluminium / Stainless steel	-60°C ... 300°C

Option level transmitter / Page 276 - 280

Accuracy / Reed contacts:	5 / 10 / 15 mm
Accuracy / Magnetostrictive:	0.2 mm
Control unit:	- Programmable - Hart-programmable / SIL2 - Profibus PA - Foundation Fieldbus

Option electrical heat tracing / Page 290

Holding temperature:	~10°C / Frost protection

Option instrument isolation / Page 290 - 291

Isolation:	Armaflex isolation / Rock-wool isolation

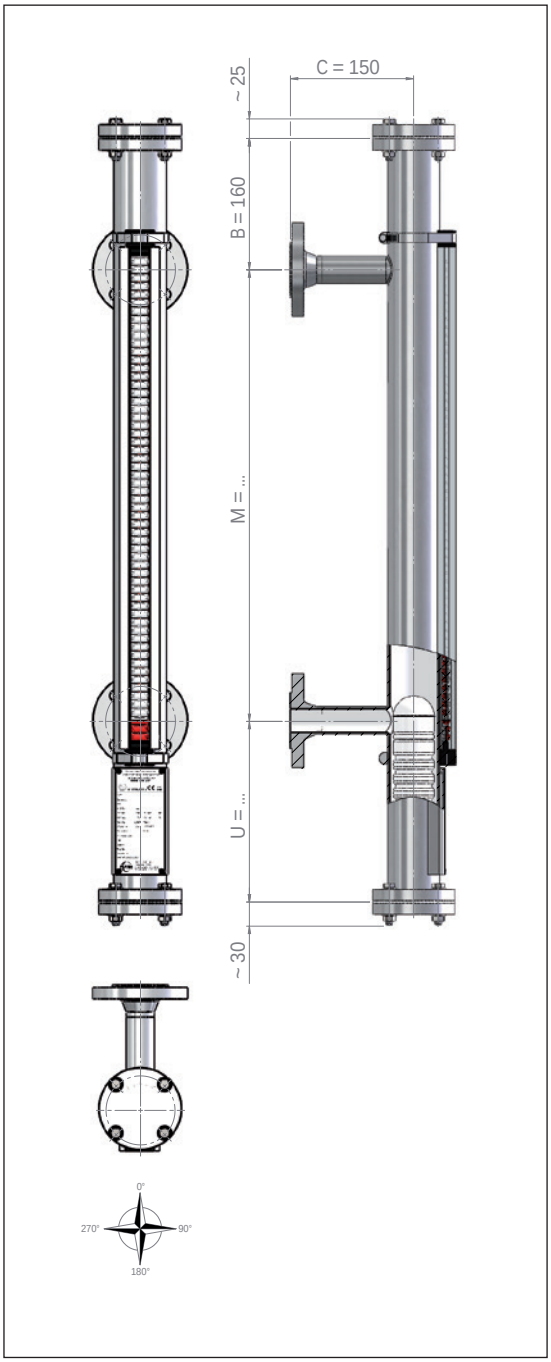

Approvals / Certificates

ATEX*

II 1/2G c IIC T6 - T1 II 2D c IIC T6 - T1

Liquid temperature Ex max. 250°C

The bypass level indicator are based on a modular design and can be arranged individually.
Type key page 236 - 241

* The approval is dependent on the equipment combination

Heinrich Kübler AG
Ruessenstrasse 4 | CH-6340 Baar | Phone +41 (0)41 766 62 62 | Fax +41 (0)41 766 62 63 | E-Mail info@kubler.ch | Internet www.kubler.ch

Type **ACS1..-..-../../..-M..-../../..**

Material quality:	Stainless steel 1.4404 / 1.4435 / 1.4571 (316L / 316Ti) Steel 1.0460 / 1.5415 / 1.5423 (A106Gr.B / A105/C21 / A234Gr.WPB) Titanium Alloy C Stainless steel ECTFE coated Stainless steel PFA coated
Centre distance M:	150 ... 25000 mm**
Specific gravity:	-
Design pressure:	-1 bar ... 400 bar
Design temperature:	
- Stainless steel:	-196°C ... 400°C
- Stahl:	-30°C ... 400°C
- Titanium:	-10°C ... 400°C
- Alloy C:	-196°C ... 200°C
- Stainless steel ECTFE coated:	-78°C ... 150°C
- Stainless steel PFA coated:	-100°C ... 250°C

Design

Chamber:	Ø 60.30 x 2.00 mm C: 150 mm Ø 60.33 x 2.77 mm C: 150 mm / NACE Ø 73.03 x 3.05 mm C: 150 mm / NACE Ø 88.90 x 2.00 mm C: 180 mm Ø 88.90 x 3.05 mm C: 180 mm / NACE Ø 114.30 x 2.00 mm C: 180 mm Ø 114.30 x 3.00 mm C: 180 mm Ø 114.30 x 3.05 mm C: 180 mm / NACE
Process connection:	Type key page 236
Chamber end top:	-
Chamber end bottom:	Page 294 - 295
Float:	-

Option electrical heat tracing / Page 290

Holding temperature:	~10°C / Frost protection

Option instrument isolation / Page 290 - 291

Isolation:	Armaflex isolation / Rock-wool isolation

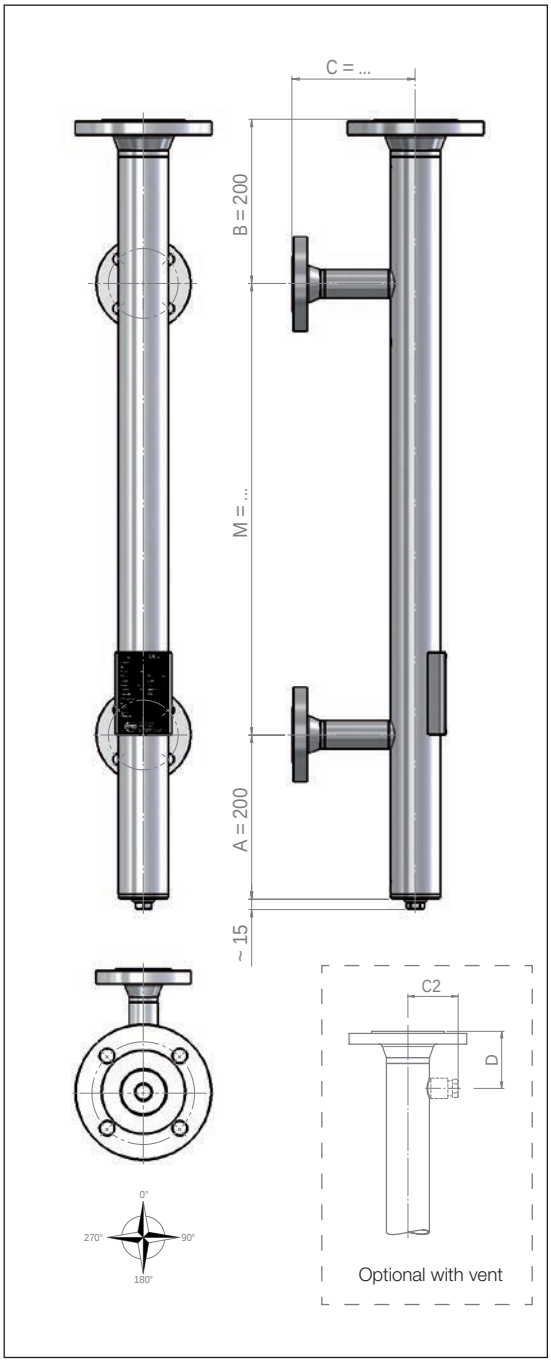

Approvals / Certificates

Material quality Steel has no GL / BV / ABS approval.

ATEX*

II 1/2G c IIC T6 - T1 II 2D c IIC T6 - T1

Liquid temperature Ex max. 300°C

The bypass level indicator are based on a modular design and can be arranged individually.
Type key page 236 - 241

* The approval is dependent on the equipment combination

** Depends on the approval

Heinrich Kübler AG
Ruessenstrasse 4 | CH-6340 Baar | Phone +41 (0)41 766 62 62 | Fax +41 (0)41 766 62 63 | E-Mail info@kubler.ch | Internet www.kubler.ch

Type **ACS2-..-../../..-M..-V/../..-ZK..-MR..-Z..S/..**

Material quality:	1.4404 / 1.4435 / 1.4571 (316L / 316Ti)
Centre distance M:	150 ... 25000 mm**
Specific gravity:	≥ 480 kg/m³
Design pressure:	-1 bar ... 100 bar
Design temperature:	-196°C ... 400°C

Design

Chamber:	Ø 60.30 x 2.00 mm Ø 60.33 x 2.77 mm / NACE Ø 63.50 x 2.00 mm
Process connection:	Type key page 236
Chamber end top:	Page 292 - 293
Chamber end bottom:	Page 294 - 295
Float:	Page 266 - 268

Option magnetic roller indicator / Page 274

Aluminium or Stainless steel / Pocan	-40°C ... 200°C
Aluminium or Stainless steel / Ceramic	-40°C ... 400°C

Option scale / Page 275

Aluminium / Stainless steel	With adhesive foil / Engraving / Blank

Option magnetic switch / Page 282 - 289

Aluminium / Stainless steel	-60°C ... 300°C

Option level transmitter / Page 276 - 280

Accuracy / Reed contacts:	5 / 10 / 15 mm
Accuracy / Magnetostrictive:	0.2 mm
Control unit:	- Programmable - Hart-programmable / SIL2 - Profibus PA - Foundation Fieldbus

Option electrical heat tracing / Page 290

Holding temperature:	~10°C / Frost protection

Option instrument isolation / Page 290 - 291

Isolation:	Armaflex isolation / Rock-wool isolation

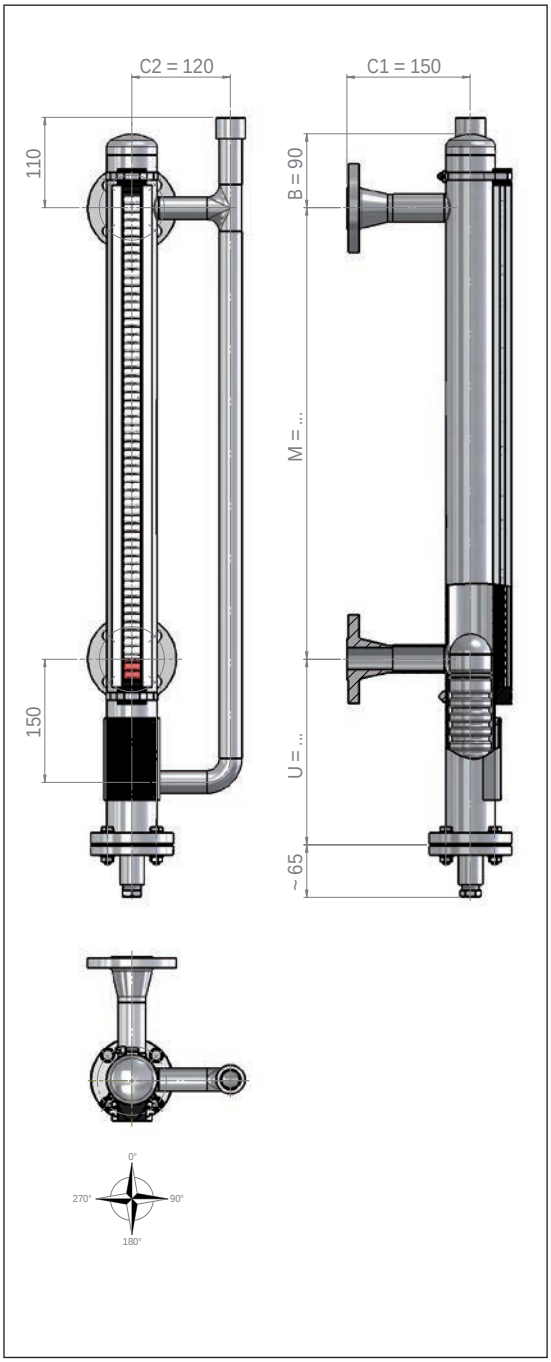

Approvals / Certificates

ATEX*

II 1/2G c IIC T6 - T1 II 2D c IIC T6 - T1

Liquid temperature Ex max. 300°C

The bypass level indicator are based on a modular design and can be arranged individually.
Type key page 236 - 241

* The approval is dependent on the equipment combination

** Depends on the approval

Heinrich Kübler AG
Ruessenstrasse 4 | CH-6340 Baar | Phone +41 (0)41 766 62 62 | Fax +41 (0)41 766 62 63 | E-Mail info@kubler.ch | Internet www.kubler.ch

Type **ACS3-..-../../..-M..-V/88/..-MR..-Z..S/..**

Material quality:	1.4404 / 1.4435 / 1.4571 (316L / 316Ti)
Centre distance M:	150 ... 25000 mm**
Specific gravity:	≥ 400 kg/m³
Design pressure:	-1 bar ... 100 bar
Design temperature:	-196°C ... 400°C

Design

Chamber:	Ø 88.90 x 2.00 mm Ø 88.90 x 3.05 mm / NACE
Process connection:	Type key page 236
Chamber end top:	-
Chamber end bottom:	Page 294 - 295
Float:	Page 266 - 268

Option magnetic roller indicator / Page 274

Aluminium or Stainless steel / Pocan	-40°C ... 200°C
Aluminium or Stainless steel / Ceramic	-40°C ... 400°C

Option scale / Page 275

Aluminium / Stainless steel	With adhesive foil / Engraving / Blank

Option magnetic switch / Page 282 - 289

Aluminium / Stainless steel	-60°C ... 300°C

Option level transmitter / Page 276 - 280

Accuracy / Reed contacts:	5 / 10 / 15 mm
Accuracy / Magnetostrictive:	0.2 mm
Control unit:	- Programmable - Hart-programmable / SIL2 - Profibus PA - Foundation Fieldbus

Option electrical heat tracing / Page 290

Holding temperature:	~10°C / Frost protection

Option instrument isolation / Page 290 - 291

Isolation:	Armaflex isolation / Rock-wool isolation

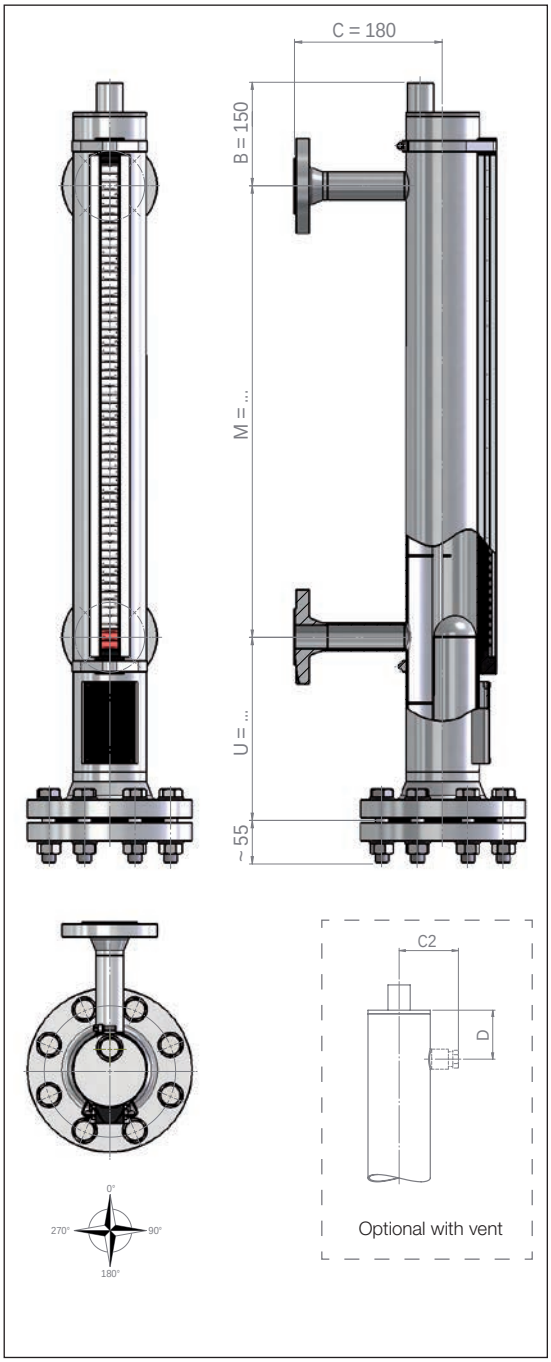

Approvals / Certificates

ATEX*

II 1/2G c IIC T6 - T1 II 2D c IIC T6 - T1

Liquid temperature Ex max. 300°C

The bypass level indicator are based on a modular design and can be arranged individually.
Type key page 236 - 241

* The approval is dependent on the equipment combination

** Depends on the approval

Heinrich Kübler AG
Ruessenstrasse 4 | CH-6340 Baar | Phone +41 (0)41 766 62 62 | Fax +41 (0)41 766 62 63 | E-Mail info@kubler.ch | Internet www.kubler.ch

Type **ACS4-..-../../..-M..-V/114/..-MR..-Z..S/..**

Material quality:	1.4404 / 1.4435 / 1.4571 (316L / 316Ti)
Centre distance M:	150 ... 25000 mm**
Specific gravity:	≥ 480 kg/m³
Design pressure:	-1 bar ... 100 bar
Design temperature:	-196°C ... 400°C

Design

Chamber:	Ø 114.30 x 2.00 mm Ø 114.30 x 3.00 mm Ø 114.30 x 3.05 mm / NACE
Process connection:	Type key page 236
Chamber end top:	-
Chamber end bottom:	Page 294 - 295
Float:	Page 266 - 268

Option magnetic roller indicator / Page 274

Aluminium or Stainless steel / Pocan	-40°C ... 200°C
Aluminium or Stainless steel / Ceramic	-40°C ... 400°C

Option scale / Page 275

Aluminium / Stainless steel	With adhesive foil / Engraving / Blank

Option magnetic switch / Page 282 - 289

Aluminium / Stainless steel	-60°C ... 300°C

Option level transmitter / Page 276 - 280

Accuracy / Reed contacts:	5 / 10 / 15 mm
Accuracy / Magnetostrictive:	0.2 mm
Control unit:	- Programmable - Hart-programmable / SIL2 - Profibus PA - Foundation Fieldbus

Option electrical heat tracing / Page 290

Holding temperature:	~10°C / Frost protection

Option instrument isolation / Page 290 - 291

Isolation:	Armaflex isolation / Rock-wool isolation

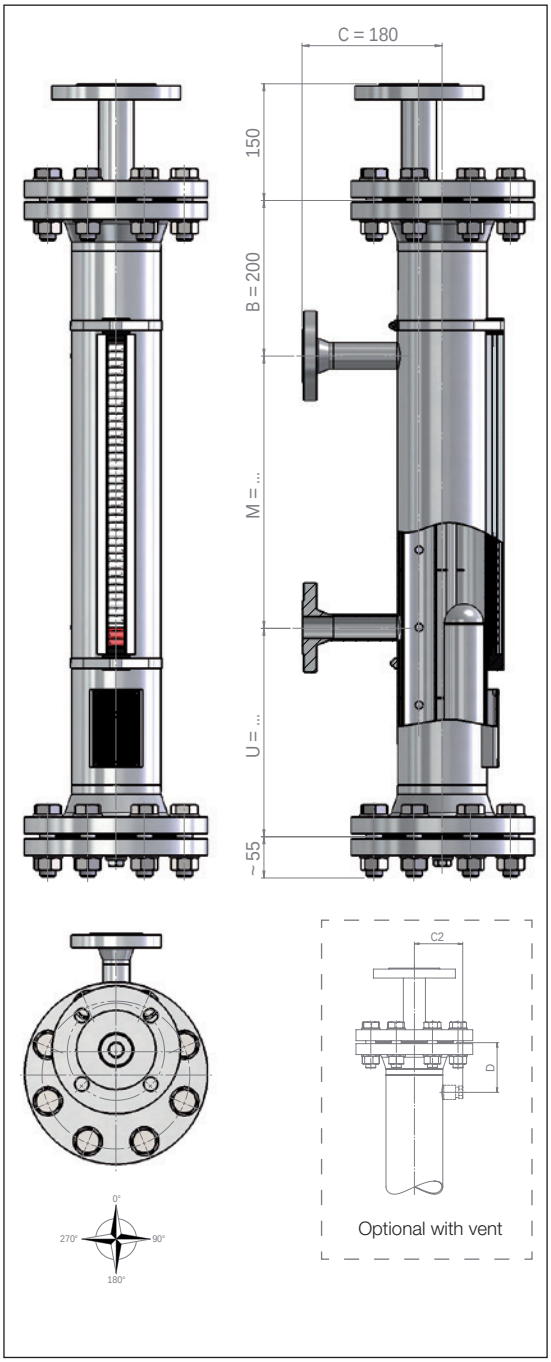

Approvals / Certificates

ATEX*

II 1/2G c IIC T6 - T1 II 2D c IIC T6 - T1

Liquid temperature Ex max. 300°C

The bypass level indicator are based on a modular design and can be arranged individually.
Type key page 236 - 241

* The approval is dependent on the equipment combination

** Depends on the approval

Cylindrical float PN 4 **PVC**

Float:	ZPSS/.../B152
Diameter [mm]:	50
Design temperature [°C]:	-15 ... 40
Design pressure [bar]:	-1 ... 4

Distance U (see bypass level indicator figure)

Distance U with float stop: Float length - 25 mm

Float ZPSS/.../B152					
Length [mm]	**150**	**200**	**250**	**300**	**350**
Weight [g]	275	316	356	397	437

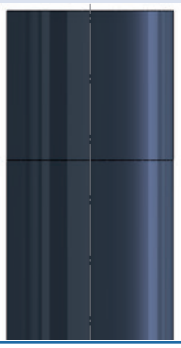

Float height above liquid [mm]	Specific gravity of the liquid [kg/m³]				
0	-	-	-	-	-
10	-	-	-	-	-
20	-	-	-	-	-
30	1170	950	820	750	700
40	1270	1010	860	780	720
50	**1400**	**1070**	**910**	**810**	**740**
60	1560	1150	950	840	770
70	1750	1240	1010	880	790
80	2000	1340	1070	920	820
90	2330	1460	1130	960	860
100	2800	1610	1210	1010	890

Cylindrical float PN 4 **PP**

Float:	ZPPSS/../B152
Diameter [mm]:	50
Design temperature [°C]:	-10 ... 60
Design pressure [bar]:	-1 ... 4

Distance U (see bypass level indicator figure)

Distance U with float stop: Float length - 25 mm

Float ZPPSS/.../B152					
Length [mm]	**150**	**200**	**250**	**300**	**350**
Weight [g]	246	279	311	344	376

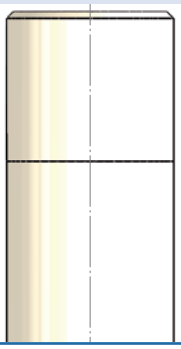

Float height above liquid [mm]	Specific gravity of the liquid [kg/m³]				
0	-	-	-	-	-
10	-	-	-	-	-
20	-	-	-	-	-
30	1040	840	720	650	600
40	1140	890	750	670	620
50	**1250**	**950**	**790**	**700**	**640**
60	1390	1010	830	730	660
70	1570	1090	880	760	680
80	1790	1180	930	800	710
90	2090	1290	990	830	740
100	2510	1420	1060	880	770

The bypass level indicator are based on a modular design and can be arranged individually.
Type key page 236 - 241

50 ~ Position of the magnetic system

Heinrich Kübler AG
Ruessenstrasse 4 | CH-6340 Baar | Phone +41 (0)41 766 62 62 | Fax +41 (0)41 766 62 63 | E-Mail info@kubler.ch | Internet www.kubler.ch

Cylindrical float PN 4 **PVDF**

Float:	ZPFSS/../B152
Diameter [mm]:	50
Design temperature [°C]:	-10 ... 80
Design pressure [bar]:	-1 ... 4

Distance U (see bypass level indicator figure)

Distance U with float stop: Float length - 25 mm

Float ZPFSS/../B152					
Length [mm]	**150**	**200**	**250**	**300**	**350**
Weight [g]	278	319	360	401	442

Float height above liquid [mm]	Specific gravity of the liquid [kg/m³]				
0	-	-	-	-	-
10	-	-	-	-	-
20	-	-	-	-	-
30	1180	960	830	760	700
40	1290	1020	870	790	730
50	**1420**	**1080**	**920**	**820**	**750**
60	1570	1160	960	850	780
70	1770	1250	1020	890	800
80	2020	1350	1080	930	830
90	2360	1480	1150	970	870
100	2830	1620	1220	1020	900

The bypass level indicator are based on a modular design and can be arranged individually.
Type key page 236 - 241

50 ~ Position of the magnetic system

Cylindrical float PN 16 — **Stainless steel 1.4571 (316Ti)**

Float:	ZVSS/.../B152
Diameter [mm]:	52
Design temperature [°C]:	-40 ... 250 (300)
Design pressure [bar]:	-1 ... 20 (18,5)

Distance U (see bypass level indicator figure)

Distance U with float stop:	Float length - 24 mm
Distance U with dampening spring:	Float length - 10 mm

Float ZVSS/.../B152

450	**400**	**350**	**300**	**250**	**200**	**150**	Length [mm]
472	440	399	362	327	297	253	Weight [g]

Specific gravity of the liquid [kg/m³]							Float height above liquid [mm]	
-	-	-	-	-	-	-	0	0
-	-	-	-	-	-	-	10	10
-	-	-	-	-	-	-	20	20
600	640	680	720	800	950	1170	30	30
610	660	700	740	840	1010	1280	40	40
630	**680**	**720**	**780**	**880**	**1080**	**1420**	**50**	**50**
650	700	750	810	930	1160	1600	60	60
660	720	780	850	980	1260	1820	70	70
680	740	810	890	1050	1370	2110	80	80
700	770	840	930	1110	1500	2520	90	90
720	790	870	980	1190	1670	-	100	100

Cylindrical float PN 16 — **Stainless steel / ECTFE coated** — **Stainless steel / PFA coated**

Float:	ZVEECSSA/.../B152 / ZVEECSSB/.../B152 (Ex)	ZVPFASSA/.../B152 / ZVPFASSB/.../B152 (Ex)
Diameter [mm]:	53	53
Design temperature [°C]:	-40 ... 150	-40 ... 250
Design pressure [bar]:	-1 ... 20	-1 ... 20

Distance U (see bypass level indicator figure)

Distance U with float stop:	Float length - 24 mm	Float length - 24 mm
Distance U with dampening spring:	Float length - 10 mm	Float length - 10 mm

Float ZVEECSSA/.../B152 / ZVEECSSB/.../B152 (Ex) — **Float ZVPFASSA/.../B152 / ZVPFASSB/.../B152 (Ex)**

450	**400**	**350**	**300**	**250**	**200**	**150**	Length [mm]	**150**	**200**	**250**	**300**	**350**	**400**	**450**
545	505	456	410	367	329	277	Weight [g]	284	338	378	424	471	523	565

Specific gravity of the liquid [kg/m³]							Float height above liquid [mm]		Specific gravity of the liquid [kg/m³]						
-	-	-	-	-	-	-	0	0	-	-	-	-	-	-	-
-	-	-	-	-	-	-	10	10	-	-	-	-	-	-	-
-	-	-	-	-	-	-	20	20	-	-	-	-	-	-	-
660	700	730	770	850	1000	1220	30	30	1260	1035	885	805	750	715	680
670	720	760	800	900	1070	1350	40	40	1385	1105	930	835	775	735	695
690	**740**	**780**	**840**	**940**	**1140**	**1490**	**50**	**50**	**1535**	**1185**	**975**	**870**	**800**	**760**	**715**
710	760	810	870	1000	1230	1680	60	60	1725	1275	1030	905	830	780	735
730	780	840	910	1050	1330	1910	70	70	1965	1375	1090	950	860	805	755
750	810	870	960	1120	1450	2220	80	80	2285	1500	1160	995	890	830	775
770	830	910	1000	1190	1590	2650	90	90	2730	1650	1235	1040	925	860	795
790	860	950	1060	1280	1770	-	100	100	-	1830	1325	1095	965	890	820

The bypass level indicator are based on a modular design and can be arranged individually.
Type key page 236 - 241

50 ~ Position of the magnetic system

Heinrich Kübler AG
Ruessenstrasse 4 | CH-6340 Baar | Phone +41 (0)41 766 62 62 | Fax +41 (0)41 766 62 63 | E-Mail info@kubler.ch | Internet www.kubler.ch

Cylindrical float PN 16	Titanium	Alloy C
Float:	ZTIS/.../16/.../.../.../TR1	ZHCS/.../16/.../.../.../TR1
Diameter [mm]:	52	52
Design temperature [°C]:	-30 ... 150 (200)	-196 ... 200
Design pressure [bar]:	-1 ... 16 (10)	-1 ... 16

Distance U (see bypass level indicator figure)		
Distance U with float stop:	Float length - 24 mm	Float length - 24 mm
Distance U with dampening spring:	Float length - 10 mm	Float length - 10 mm

Float ZTIS/../16/.../.../.../TR1								Float ZHCS/../16/.../.../.../TR1						
450	**400**	**350**	**300**	**250**	**200**	**150**	Length [mm]	**150**	**200**	**250**	**300**	**350**	**400**	**450**
318	288	259	229	204	175	146	Weight [g]	197	245	289	338	381	430	474

Specific gravity of the liquid [kg/m³]							Float height above liquid [mm]		Specific gravity of the liquid [kg/m³]						
-	-	-	-	-	-	-	0	0	-	-	-	-	-	-	-
-	-	-	-	-	-	-	10	10	-	-	-	-	-	-	-
-	-	-	-	-	-	-	20	20	-	-	-	-	-	-	-
380	395	410	430	475	535	645	30	30	900	770	695	660	625	605	585
390	405	425	450	500	570	710	40	40	985	825	730	685	645	625	600
400	**415**	**440**	**470**	**525**	**610**	**785**	**50**	**50**	**1095**	**880**	**770**	**710**	**665**	**640**	**615**
410	430	455	490	555	655	885	60	60	1230	950	810	745	690	660	635
420	440	470	510	585	710	1005	70	70	1400	1025	855	775	715	680	650
435	455	490	535	625	775	1170	80	80	1625	1115	910	815	740	705	665
445	470	510	560	665	850	1400	90	90	1940	1225	970	855	770	725	685
460	485	530	590	710	945	1735	100	100	2410	1360	1040	900	805	750	705

The bypass level indicator are based on a modular design and can be arranged individually.
Type key page 236 - 241

50 ~ Position of the magnetic system

Cylindrical float PN 40 **Stainless steel 1.4571 (316Ti)**

Float:	ZVS/.../40/.../.../.../TR1
Diameter [mm]:	52
Design temperature [°C]:	-196 ... 250
Design pressure [bar]:	-1 ... 40

Distance U (see bypass level indicator figure)

Distance U with float stop:	Float length - 24 mm
Distance U with dampening spring:	Float length - 10 mm

Float ZVS/../40/.../.../.../TR1											
Length [mm]	**150**	**200**	**250**	**300**	**350**	**400**	**450**	**500**	**550**	**600**	**650**
Weight [g]	197	258	300	342	389	431	472	519	561	603	645

Float height above liquid [mm]	Specific gravity of the liquid [kg/m³]										
0	0	-	-	-	-	-	-	-			
10	10	-	-	-	-	-	-	-			
20	20	-	-	-	-	-	-	-			
30	30	900	815	720	665	635	605	585	575	560	545	535
40	40	985	865	760	690	655	625	600	585	570	555	545
50	**50**	**1095**	**930**	**795**	**720**	**680**	**640**	**615**	**600**	**580**	**565**	**555**
60	60	1230	1000	840	750	705	660	630	610	595	580	565
70	70	1400	1080	890	785	730	680	645	625	605	590	575
80	80	1625	1175	945	825	755	705	665	640	620	600	585
90	90	1940	1290	1005	865	785	730	685	660	635	610	595
100	100	2410	1435	1080	910	820	755	705	675	645	625	605

Cylindrical float PN 40 **Titanium**

Float:	ZTIS/.../40/.../.../.../TR1
Diameter [mm]:	52
Design temperature [°C]:	-30 ... 200
Design pressure [bar]:	-1 ... 40

Distance U (see bypass level indicator figure)

Distance U with float stop:	Float length - 24 mm
Distance U with dampening spring:	Float length - 10 mm

Float ZTIS/../40/.../.../.../TR1											
Length [mm]	**150**	**200**	**250**	**300**	**350**	**400**	**450**	**500**	**550**	**600**	**650**
Weight [g]	175	219	258	298	337	376	420	460	499	538	578

Float height above liquid [mm]	Specific gravity of the liquid [kg/m³]											
0	0	-	-	-	-	-	-	-	-	-	-	-
10	10	-	-	-	-	-	-	-	-	-	-	-
20	20	-	-	-	-	-	-	-	-	-	-	-
30	30	775	670	600	560	535	515	505	490	480	475	465
40	40	850	715	630	585	550	530	515	505	490	480	475
50	**50**	**945**	**765**	**665**	**610**	**570**	**545**	**530**	**515**	**500**	**490**	**480**
60	60	1060	820	700	635	590	560	545	525	510	500	490
70	70	1205	890	740	665	610	575	560	540	520	510	500
80	80	1405	970	790	695	635	595	575	550	535	520	510
90	90	1675	1065	840	730	660	615	590	565	545	530	515
100	100	2080	1180	900	770	690	635	605	580	560	540	525

The bypass level indicator are based on a modular design and can be arranged individually.
Type key page 236 - 241

50 ~ Position of the magnetic system

Heinrich Kübler AG
Ruessenstrasse 4 | CH-6340 Baar | Phone +41 (0)41 766 62 62 | Fax +41 (0)41 766 62 63 | E-Mail info@kubler.ch | Internet www.kubler.ch

Cylindrical float PN 40 **Alloy C**

Float:	ZHCS/.../40/.../.../.../TR1
Diameter [mm]:	52
Design temperature [°C]:	-196 ... 200
Design pressure [bar]:	-1 ... 40

Distance U (see bypass level indicator figure)

Distance U with float stop:	Float length - 24 mm
Distance U with dampening spring:	Float length - 10 mm

Float ZHCS/../40/.../.../.../TR1											
Length [mm]	**150**	**200**	**250**	**300**	**350**	**400**	**450**	**500**	**550**	**600**	**650**
Weight [g]	216	264	313	361	414	463	511	565	613	661	710

Float height above liquid [mm]		Specific gravity of the liquid [kg/m³]										
0	0	-	-	-	-	-	-	-				
10	10	-	-	-	-	-	-	-				
20	20	-	-	-	-	-	-	-				
30	30	985	830	755	705	675	650	630	625	610	600	590
40	40	1080	885	790	730	700	670	650	635	620	610	600
50	**50**	**1200**	**950**	**830**	**760**	**725**	**690**	**665**	**650**	**635**	**620**	**610**
60	60	1345	1020	875	795	750	710	680	665	650	635	620
70	70	1535	1105	930	830	775	735	700	680	660	645	635
80	80	1785	1205	985	870	805	755	720	700	675	660	645
90	90	2130	1320	1050	910	840	780	740	715	690	670	655
100	100	2640	1465	1125	960	870	810	760	735	705	685	670

The bypass level indicator are based on a modular design and can be arranged individually.
Type key page 236 - 241

50 ~ Position of the magnetic system

Cylindrical float PN 160 **Titanium**

Float:	ZTIKS1/../TR1 for chamber: ≤ Ø 63.50 mm					
Diameter [mm]:	52					
Design temperature [°C]:	-90 … 400	-90 … 350	-90 … 300	-90 … 250	-90 … 200	-90 … 150
Design pressure [bar]:	-1 … 125	-1 … 135	-1 … 150	-1 … 155	-1 … 165	-1 … 175

Distance U (see bypass level indicator figure)

Distance U with float stop: Float length - 28 mm
Distance U with dampening spring: Float length - 13 mm

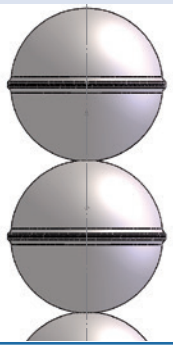

Float ZTIKS1/../TR1													
Number of balls		3	4	5	6	7	8	9	10	11	12	13	14
Length [mm]		**146**	**194**	**243**	**291**	**340**	**388**	**437**	**485**	**534**	**582**	**631**	**679**
Weight [g]		134	159	184	209	234	258	283	308	333	358	382	407
Float height above liquid [mm]		Specific gravity of the liquid [kg/m³]											
0	0	-	-	-	-	-	-	-	-	-	-	-	-
10	10	-	-	-	-	-	-	-	-	-	-	-	-
20	20	-	-	-	-	-	-	-	-	-	-	-	-
30	30	870	725	645	595	565	535	520	505	490	480	475	465
40	40	975	785	685	625	585	555	535	515	505	493	480	475
50	**50**	**1025**	**810**	**705**	**640**	**595**	**565**	**540**	**525**	**510**	**497**	**485**	**478**
60	60	1080	840	720	650	605	570	550	530	515	502	490	482
70	70	1240	915	770	685	635	595	565	545	525	515	500	492
80	80	1515	1035	840	735	670	620	590	565	545	530	515	505
90	90	1855	1155	905	780	700	645	610	580	560	540	525	515
100	100	2045	1215	935	800	715	655	620	590	565	545	530	520

Cylindrical float PN 160 **Titanium**

Float:	ZTIKS1/../TR2 for chamber: ≥ Ø 73.03 mm					
Diameter [mm]:	52					
Design temperature [°C]:	-90 … 400	-90 … 350	-90 … 300	-90 … 250	-90 … 200	-90 … 150
Design pressure [bar]:	-1 … 125	-1 … 135	-1 … 150	-1 … 155	-1 … 165	-1 … 175

Distance U (see bypass level indicator figure)

Distance U with float stop: Float length - 28 mm
Distance U with dampening spring: Float length - 13 mm

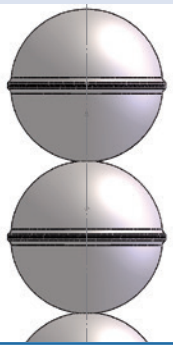

Float ZTIKS1/../TR2													
Number of balls		3	4	5	6	7	8	9	10	11	12	13	14
Length [mm]		**146**	**194**	**243**	**291**	**340**	**388**	**437**	**485**	**534**	**582**	**631**	**679**
Weight [g]		174	199	224	249	274	298	323	348	373	398	422	447
Float height above liquid [mm]		Specific gravity of the liquid [kg/m³]											
0	0	-	-	-	-	-	-	-	-	-	-	-	-
10	10	-	-	-	-	-	-	-	-	-	-	-	-
20	20	-	-	-	-	-	-	-	-	-	-	-	-
30	30	1130	905	785	710	660	620	590	570	550	535	520	510
40	40	1265	980	835	745	685	640	610	585	565	550	533	520
50	**50**	**1330**	**1015**	**855**	**760**	**700**	**650**	**615**	**590**	**570**	**555**	**537**	**525**
60	60	1400	1050	880	775	710	660	625	600	575	560	542	530
70	70	1615	1150	940	820	740	685	645	615	590	570	555	540
80	80	1965	1295	1020	875	780	715	670	635	610	585	570	555
90	90	2410	1445	1105	925	820	745	695	655	625	600	580	565
100	100	2660	1520	1140	950	835	760	705	665	635	610	585	570

The bypass level indicator are based on a modular design and can be arranged individually.
Type key page 236 - 241

50 ~ Position of the magnetic system

Heinrich Kübler AG
Ruessenstrasse 4 | CH-6340 Baar | Phone +41 (0)41 766 62 62 | Fax +41 (0)41 766 62 63 | E-Mail info@kubler.ch | Internet www.kubler.ch

Cylindrical float PN 320 **Titanium**

Float:	ZTIKS2/../TR2 for chamber: ≥ Ø 73.03 mm					
Diameter [mm]:	52					
Design temperature [°C]:	-90 … 400	-90 … 350	-90 … 300	-90 … 250	-90 … 200	-90 … 150
Design pressure [bar]:	-1 … 212	-1 … 235	-1 … 258	-1 … 270	-1 … 282	-1 … 300

Distance U (see bypass level indicator figure)

Distance U with float stop: Float length - 28 mm
Distance U with dampening spring: Float length - 13 mm

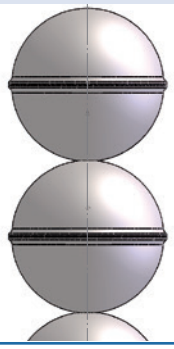

Float ZTIKS2/../TR2													
Number of balls		3	4	5	6	7	8	9	10	11	12	13	14
Length [mm]		**146**	**194**	**243**	**291**	**340**	**388**	**437**	**485**	**534**	**582**	**631**	**679**
Weight [g]		204	239	274	308	343	378	412	447	482	516	551	586
Float height above liquid [mm]		Specific gravity of the liquid [kg/m³]											
0	0	-	-	-	-	-	-	-	-	-	-	-	-
10	10	-	-	-	-	-	-	-	-	-	-	-	-
20	20	-	-	-	-	-	-	-	-	-	-	-	-
30	30	1325	1090	960	880	825	785	755	730	710	695	680	670
40	40	1480	1175	1020	920	860	815	775	750	730	710	695	685
50	**50**	**1560**	**1215**	**1045**	**940**	**875**	**825**	**785**	**760**	**735**	**715**	**700**	**690**
60	60	1645	1260	1075	960	890	840	795	770	745	725	710	695
70	70	1890	1380	1150	1010	930	870	825	790	765	740	725	710
80	80	2305	1555	1250	1080	980	910	855	820	785	760	740	725
90	90	2825	1735	1350	1145	1025	945	885	845	810	780	760	740
100	100	3115	1825	1395	1175	1050	965	900	855	820	790	765	745

Cylindrical float PN 63 **Titanium**

Float:	ZTIKS4/../TR2 for chamber: ≥ Ø 73.03 mm					
Diameter [mm]:	62					
Design temperature [°C]:	-90 … 400	-90 … 350	-90 … 300	-90 … 250	-90 … 200	-90 … 150
Design pressure [bar]:	-1 … 50	-1 … 55	-1 … 60	-1 … 63	-1 … 66	-1 … 70

Distance U (see bypass level indicator figure)

Distance U with float stop: Float length - 36 mm
Distance U with dampening spring: Float length - 21 mm

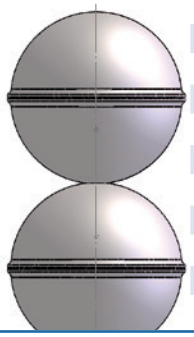

Float ZTIKS4/../TR2														
Number of balls		3	4	5	6	7	8	9	10	11	12	13	14	15
Length [mm]		**180**	**240**	**300**	**360**	**420**	**480**	**540**	**600**	**660**	**720**	**780**	**840**	**900**
Weight [g]		197	226	255	284	313	342	371	400	429	458	487	516	545
Float height above liquid [mm]		Specific gravity of the liquid [kg/m³]												
0	0	-	-	-	-	-	-	-	-	-	-	-	-	
10	10	-	-	-	-	-	-	-	-	-	-	-	-	
20	20	-	-	-	-	-	-	-	-	-	-	-	-	
30	30	696	570	500	456	426	404	386	374	362	350	345	339	333
40	40	770	614	530	478	442	418	398	382	370	360	352	345	338
50	50	838	650	554	496	456	428	406	390	378	366	357	349	343
60	**60**	**872**	**666**	**564**	**500**	**462**	**432**	**410**	**394**	**380**	**368**	**359**	**351**	**345**
70	70	906	684	576	512	468	438	414	398	382	370	361	353	347
80	80	1000	730	604	530	482	450	424	406	390	378	367	359	351
90	90	1162	800	646	558	504	466	438	418	400	386	375	366	357
100	100	1382	884	692	590	528	484	452	428	410	396	383	373	364

The bypass level indicator are based on a modular design and can be arranged individually.
Type key page 236 - 241

50 ~ Position of the magnetic system

Cylindrical float PN 16 for Bypass Level Indicator with steam tracing system **Stainless steel 1.4571 (316Ti)**

Float:	ZVS/../16/.../.../.../K74
Diameter [mm]:	52
Design temperature [°C]:	-196 ... 250
Design pressure [bar]:	-1 ... 16

Distance U (see bypass level indicator figure)

Distance U with float stop:	Float length - 24 mm
Distance U with dampening spring:	Float length - 10 mm

Float ZVS/../16/.../.../.../K74											
Length [mm]	**150**	**200**	**250**	**300**	**350**	**400**	**450**	**500**	**550**	**600**	**650**
Weight [g]	279	321	358	400	437	479	516	553	595	632	674

Float height above liquid [mm]	Specific gravity of the liquid [kg/m³]										
0	0	-	-	-	-	-	-	-			
10	10	-	-	-	-	-	-	-			
20	20	-	-	-	-	-	-	-			
30	30	1270	1010	860	780	715	675	640	610	590	575	560
40	40	1400	1080	905	810	740	695	655	625	605	585	570
50	**50**	**1550**	**1155**	**950**	**845**	**765**	**715**	**670**	**640**	**615**	**595**	**580**
60	60	1740	1240	1005	880	790	735	690	650	630	605	590
70	70	1985	1345	1060	920	820	760	705	670	640	615	600
80	80	2305	1465	1130	960	850	785	725	685	655	630	610
90	90	2750	1610	1200	1010	885	810	745	700	670	640	620
100	100	3410	1785	1285	1065	920	835	770	720	685	655	635

Cylindrical float PN 16 for Bypass Level Indicator with steam tracing system **Titanium**

Float:	ZTIS/../16/.../.../.../K74
Diameter [mm]:	52
Design temperature [°C]:	-30 ... 200
Design pressure [bar]:	-1 ... 16

Distance U (see bypass level indicator figure)

Distance U with float stop:	Float length - 24 mm
Distance U with dampening spring:	Float length - 10 mm

Float ZTIS/../16/.../.../.../K74											
Length [mm]	**150**	**200**	**250**	**300**	**350**	**400**	**450**	**500**	**550**	**600**	**650**
Weight [g]	251	281	310	340	369	399	433	462	489	521	550

Float height above liquid [mm]	Specific gravity of the liquid [kg/m³]											
0	0	-	-	-	-	-	-	-	-	-	-	-
10	10	-	-	-	-	-	-	-	-	-	-	-
20	20	-	-	-	-	-	-	-	-	-	-	-
30	30	1110	860	725	640	585	545	520	495	470	460	445
40	40	1220	915	760	665	605	560	530	505	480	465	450
50	**50**	**1355**	**980**	**800**	**695**	**625**	**575**	**545**	**515**	**490**	**475**	**460**
60	60	1520	1055	845	725	645	595	560	530	500	485	465
70	70	1730	1140	890	755	670	610	575	540	510	495	475
80	80	2015	1245	945	795	695	630	590	555	525	505	485
90	90	2405	1365	1010	830	725	655	610	570	535	515	490
100	100	2980	1515	1080	875	755	675	625	580	545	525	500

The bypass level indicator are based on a modular design and can be arranged individually.
Type key page 236 - 241

50 ~ Position of the magnetic system

Heinrich Kübler AG
Ruessenstrasse 4 | CH-6340 Baar | Phone +41 (0)41 766 62 62 | Fax +41 (0)41 766 62 63 | E-Mail info@kubler.ch | Internet www.kubler.ch

Cylindrical float PN 40 for Bypass Level Indicator with steam tracing system **Stainless steel 1.4571 (316Ti)**

Float:	ZVS/../40/…/…/…/K74
Diameter [mm]:	52
Design temperature [°C]:	-196 ... 250
Design pressure [bar]:	-1 ... 40

Distance U (see bypass level indicator figure)

Distance U with float stop:	Float length - 24 mm
Distance U with dampening spring:	Float length - 10 mm

Float ZVS/../40/.../.../.../K74											
Length [mm]	**150**	**200**	**250**	**300**	**350**	**400**	**450**	**500**	**550**	**600**	**650**
Weight [g]	298	359	401	443	490	532	573	620	662	704	746

Float height above liquid [mm]	Specific gravity of the liquid [kg/m³]										
0	0	-	-	-	-	-	-	-			
10	10	-	-	-	-	-	-	-			
20	20	-	-	-	-	-	-	-			
30	30	1360	1130	965	860	800	750	710	685	660	640	620
40	40	1495	1205	1015	895	825	770	725	700	670	650	630
50	**50**	**1655**	**1290**	**1065**	**935**	**855**	**795**	**745**	**715**	**685**	**660**	**640**
60	60	1860	1390	1125	975	885	815	765	730	700	675	655
70	70	2120	1505	1190	1020	920	840	785	750	715	685	665
80	80	2460	1635	1265	1065	955	870	805	765	730	700	675
90	90	2935	1800	1345	1120	990	900	830	785	745	715	690
100	100	3640	1995	1440	1175	1035	930	855	805	765	730	700

Cylindrical float PN 40 for Bypass Level Indicator with steam tracing system **Titanium**

Float:	ZTIS/../40/…/…/…/K74
Diameter [mm]:	52
Design temperature [°C]:	-30 ... 200
Design pressure [bar]:	-1 ... 40

Distance U (see bypass level indicator figure)

Distance U with float stop:	Float length - 24 mm
Distance U with dampening spring:	Float length - 10 mm

Float ZTIS/../40/.../.../.../K74											
Length [mm]	**150**	**200**	**250**	**300**	**350**	**400**	**450**	**500**	**550**	**600**	**650**
Weight [g]	276	320	359	399	438	477	521	561	600	639	679

Float height above liquid [mm]	Specific gravity of the liquid [kg/m³]											
0	0	-	-	-	-	-	-	-	-	-	-	-
10	10	-	-	-	-	-	-	-	-	-	-	-
20	20	-	-	-	-	-	-	-	-	-	-	-
30	30	1220	975	835	755	695	650	625	600	580	560	550
40	40	1340	1040	880	785	715	670	640	615	590	570	555
50	**50**	**1490**	**1115**	**925**	**815**	**740**	**690**	**655**	**625**	**600**	**580**	**565**
60	60	1670	1200	975	850	770	710	675	640	615	595	575
70	70	1905	1300	1035	890	795	730	690	655	630	605	585
80	80	2215	1415	1095	930	825	755	710	675	640	615	595
90	90	2640	1555	1170	975	860	780	730	690	655	630	605
100	100	3280	1725	1250	1030	895	805	755	705	670	640	620

The bypass level indicator are based on a modular design and can be arranged individually.
Type key page 236 - 241

50 ~ Position of the magnetic system

Type	MRA / MRB / MRAN / MRBN MRK
Housing:	Aluminium anodized
Ingress protection class:	IP 67

MRA / MRB / MRAN / MRBN

Indication	
- Material quality (Colour) / Diameter:	Pocan (White / Red) / Ø 10 mm
End part:	Ryton, black
Sight cover - MRA / MRAN:	Macrolon
- MRB / MRBN:	Glass
Liquid temperature:	-40°C ... 300°C
Ambient temperature:	-40°C ... 200°C
MRAN / MRBN (over-roll-protected):	Roller rotation max. 180°

MRK

Indication	
- Material quality (Colour) / Diameter:	Ceramic (White / Blue) / Ø 10 mm
End part:	Aluminium
Sight cover:	Glass
Liquid temperature:	-40°C ... 400°C
Ambient temperature:	-40°C ... 400°C

Approvals / Certificates

ABS / ATEX / BV / EAC / GL / LR

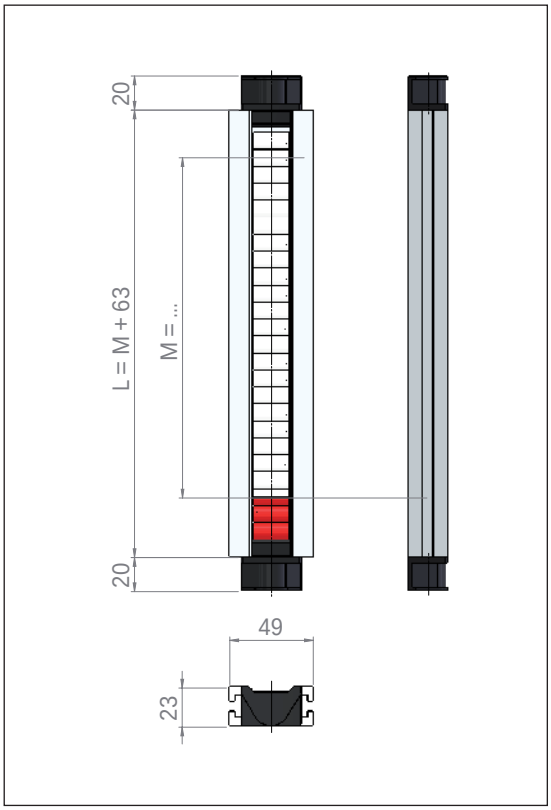

Type	MNAV / MNBV / MNAVN / MNBVN MNKV
Housing:	Aluminium with Stainless steel covered
Ingress protection class:	IP 67

MNAV / MNBV / MNAVN / MNBVN

Indication	
- Material quality (Colour) / Diameter:	Pocan (White / Red) / Ø 10 mm
End part:	Ryton, black
Sight cover - MNAV / MNAVN:	Macrolon
- MNBV / MNBVN:	Glass
Liquid temperature:	-40°C ... 300°C
Ambient temperature:	-40°C ... 200°C
MNAVN / MNBVN (over-roll-protected):	Roller rotation max. 180°

MNKV

Indication	
- Material quality (Colour) / Diameter:	Ceramic (White / Blue) / Ø 10 mm
End part:	Aluminium
Sight cover:	Glass
Liquid temperature:	-40°C ... 400°C
Ambient temperature:	-40°C ... 400°C

Approvals / Certificates

ABS / ATEX / BV / EAC / GL / LR

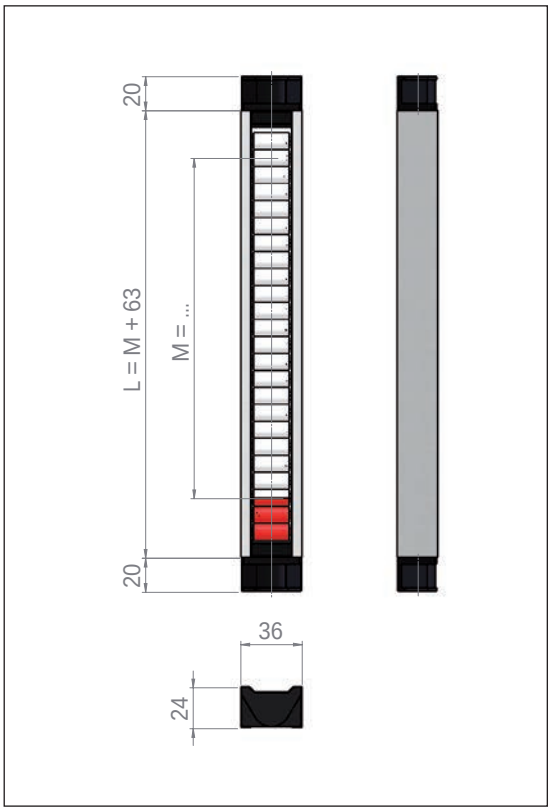

The bypass level indicator are based on a modular design and can be arranged individually.
Type key page 236 - 241

Heinrich Kübler AG
Ruessenstrasse 4 | CH-6340 Baar | Phone +41 (0)41 766 62 62 | Fax +41 (0)41 766 62 63 | E-Mail info@kubler.ch | Internet www.kubler.ch

Type	SAK / SA.. / SV..

SAK

Scale:	Adhesive foil (black)
Angle profile:	Aluminium
Scaling:	in cm (0 cm .. 10 cm .. 20 cm .. 30 cm ..)
Width:	40 mm
Ambient temperature:	-40°C ... 200°C

SA0 / SA1 / SA2 / SA3 / SA4

Scale:	Engraved
Angle profile:	Aluminium
Scaling:	Blank / % / cm / inch. / ..
Width:	40 mm
Ambient temperature:	-40°C ... 200°C

SV0 / SV1 / SV2 / SV3 / SV4

Scale:	Engraved
Angle profile:	Stainless steel
Scaling:	Blank / % / cm / inch. / ..
Width:	40 mm
Ambient temperature:	-40°C ... 400°C

Approvals / Certificates

ABS / ATEX / BV / EAC / GL / LR

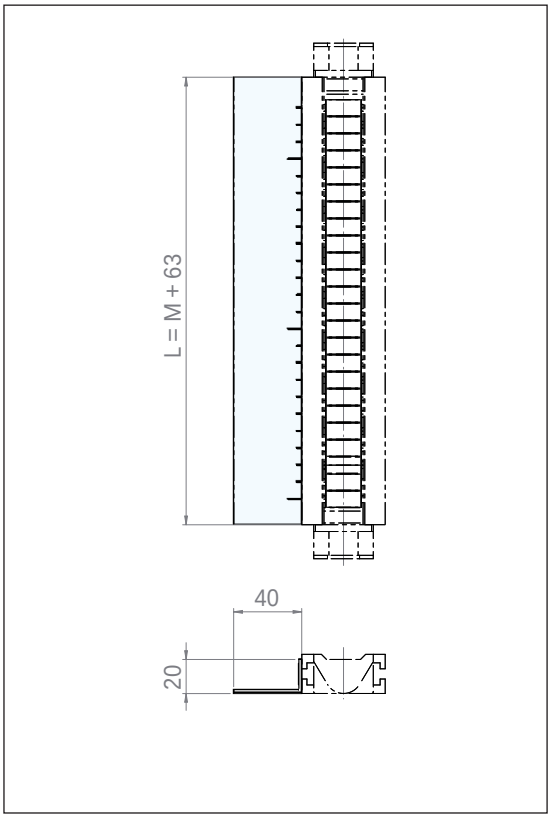

Type	Magnetic roller indicator sight extension PV
Material quality:	Acryl glass
Width:	35 mm
Depth:	67 mm
Ambient temperature:	-40°C ... 100°C
Mounting:	on magnetic roller indicator

Approvals / Certificates

ABS / ATEX / BV / EAC / GL / LR

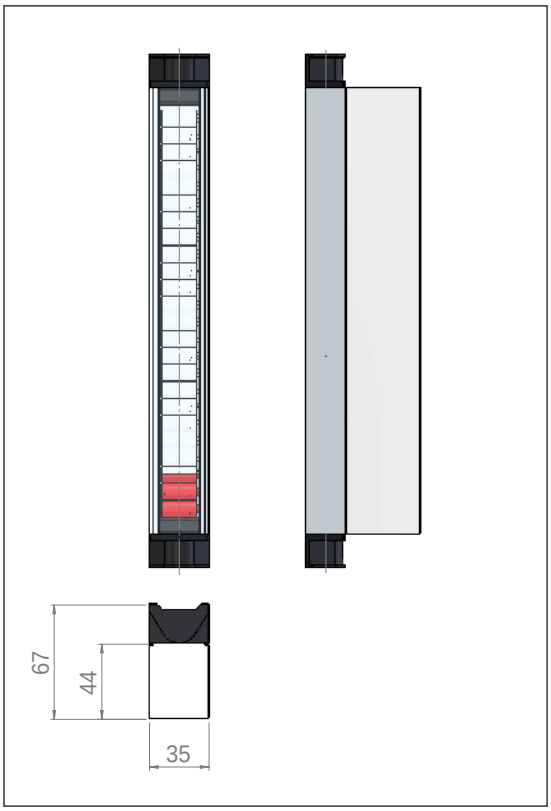

The bypass level indicator are based on a modular design and can be arranged individually.
Type key page 236 - 241

Connection diagram

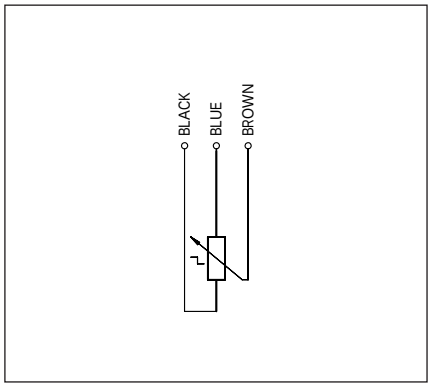

without Control unit

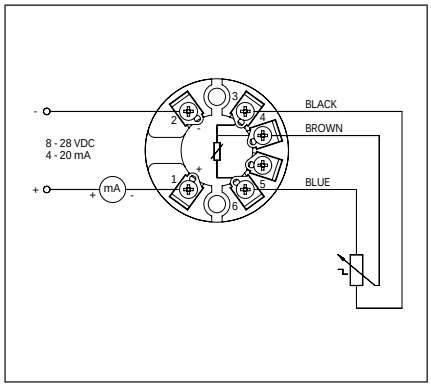

Control unit TP5343..

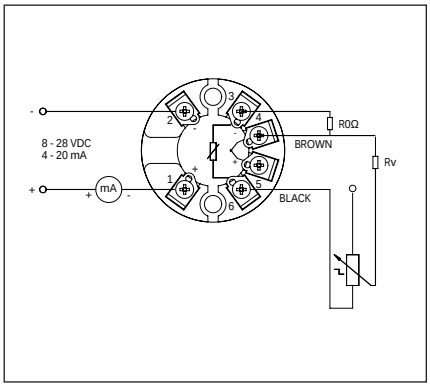

Control unit TD5335..

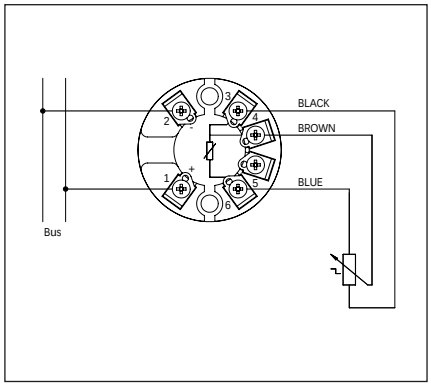

Control unit TP5350..

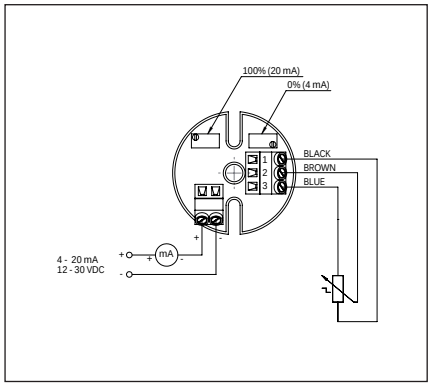

Control unit XT42SI Ex

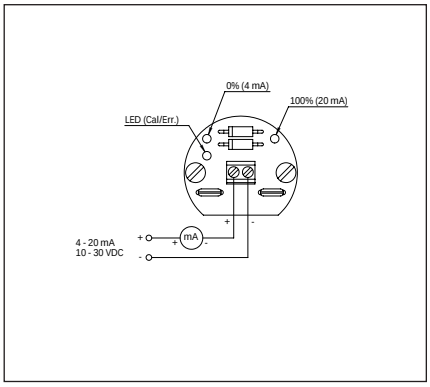

Control unit magnetostrictive

Some further data according to chapter Control Units 1011

Approvals / Certificates

ATEX-Approval for accuracy K5.. / K10.. / K15..*

II 1/2G Ex c ia IIC T6 - T3 Ga/Gb	II 2G Ex c d IIC T6 - T4 Gb	II 2G Ex c d IIC T6 - T4 Gb
II 1/2G Ex c d ia IIC T6 - T4 Ga/Gb	II 2D Ex c tb IIIC T80°C - T190°C bzw. T125°C Db IP6X	II 2D Ex c tb IIIC T80°C - T95°C bzw. T125°C Db IP6X

Type of protection intrinsic safety Ex ia IIC passive multi-pole device	U_i ≤ 30 V	I_i ≤ 150 mA		
Type of protection intrinsic safety Ex ia IIC with built-in separately certified measuring transducer		see appropriate special certificate		
Type of protection intrinsic safety Ex ia IIC switch or temperature switch	I_i ≤ 100 mA			
Type of protection intrinsic safety Ex ia IIC temperature sensor	U_N ≤ 28 V	I_i ≤ 100 mA	P_i ≤ 700 mW	
Type of protection “flameproof enclosure” passive multi-pole device	U_N ≤ 30 VDC/AC	I_N ≤ 150 mA		
Type of protection “flameproof enclosure” temperature switch / sensor	U_N ≤ 100 VDC/AC	I_N ≤ 300 mA	P_{SN} ≤ 1 W	P_{FN} ≤ 700 mW

ATEX-Approval for accuracy K1..*

II 2G Ex ia IIB/IIC T6 - T1 Gb	II 2G Ex d IIC T4	

Type of protection intrinsic safety Ex ia IIC	U_i ≤ 30 V	I_i ≤ 200 mA	P_i ≤ 1000 mW
Temperature class	T6	T5	T4 - T2
Ambient temperature(T_a)	-40°C ... 40°C	-40°C ... 55°C	-40°C ... 85°C

The bypass level indicator are based on a modular design and can be arranged individually.
Type key page 236 - 241

* = The approval is dependent on the equipment combination

Heinrich Kübler AG
Ruessenstrasse 4 | CH-6340 Baar | Phone +41 (0)41 766 62 62 | Fax +41 (0)41 766 62 63 | E-Mail info@kubler.ch | Internet www.kubler.ch

Type **ALF/../V/../..-M..**

Electrical connection:	Aluminium anodized
Cable entry:	M20 x 1.5
Ingress protection class:	IP 65
Ambient temperature:	-40°C ... 100°C
Level transmitter tube material quality:	Stainless steel
Mounting:	T-shaped sliding block or tension strap
Minimum measures (Liquid ≤ 200°C):	T: 27 mm / L1: 40 mm / Ub: 50 mm
Minimum measures (Liquid > 200°C):	T: 100 mm / L1: 40 mm / Ub: 50 mm

Accuracy

Accuracy:	5 / 10 / 15 mm
Ambient temperature / ATEX Exia:	
- K5 / K10 / K15:	-30°C ... 130°C
- K5HTF / K10HTF / K15HTF:	-40°C ... 200°C / -40°C ... 180°C
- K5HT / K10HT / K15HT:	-40°C ... 250°C / -40°C ... 180°C

Option control unit / Page 276

Control unit:	- Programmable - Hart-programmable / SIL2 - Profibus PA - Foundation Fieldbus

Approvals / Certificates

ABS / ATEX / BV / EAC / GL / LR

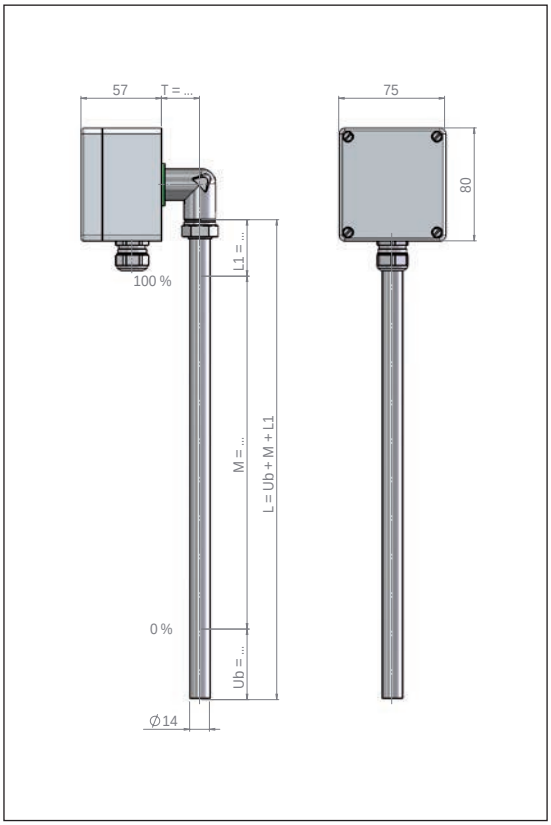

Type **ALDA/../V/../EXDG-M..**

Electrical connection:	Aluminium coated RAL 9006
Cable entry:	M20 x 1.5
Ingress protection class:	IP 68
Ambient temperature:	-40°C ... 100°C
Level transmitter tube material quality:	Stainless steel
Mounting:	T-shaped sliding block or tension strap
Minimum measures (Liquid ≤ 200°C):	T: 50 mm / L1: 40 mm / Ub: 50 mm
Minimum measures (Liquid > 200°C):	T: 100 mm / L1: 40 mm / Ub: 50 mm

Accuracy

Accuracy:	5 / 10 / 15 mm
Ambient temperature	
- K5 / K10 / K15:	-30°C ... 120°C
- K5HTF / K10HTF / K15HTF:	-40°C ... 120°C
- K5HT / K10HT / K15HT:	-40°C ... 120°C

Option control unit / Page 276

Control unit:	- Programmable - Hart-programmable / SIL2 - Profibus PA - Foundation Fieldbus

Approvals / Certificates

ABS / ATEX / BV / EAC / GL / LR

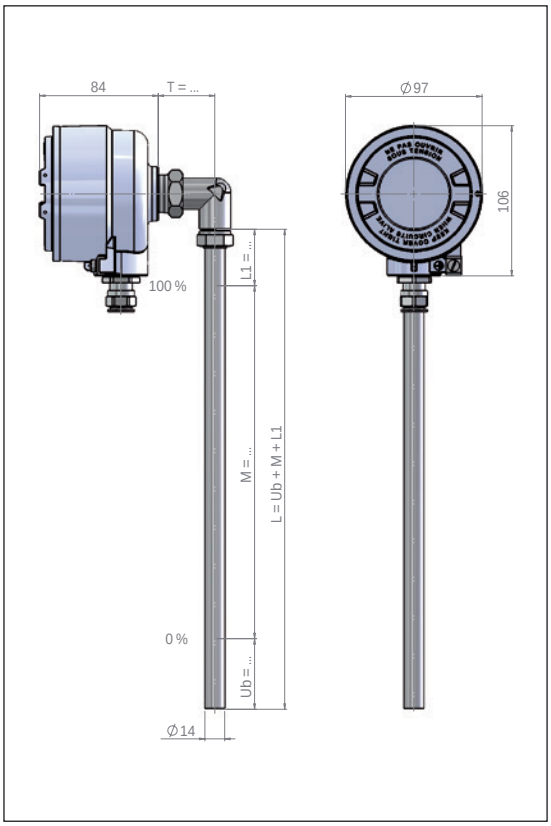

The bypass level indicator are based on a modular design and can be arranged individually.
Type key page 236 - 241

Type	**DAALA/../V/..-M..**
Electrical connection:	Aluminium anodized
Cable entry:	M20 x 1.5
Ingress protection class:	IP 65
Ambient temperature:	-40°C ... 60°C
Display:	4-digit LED display in red / Free scaling
Current input:	4 ... 20 mA
Level transmitter tube material quality:	Stainless steel
Mounting:	T-shaped sliding block or tension strap
Minimum measures (Liquid ≤ 200°C):	T: 50 mm / L1: 40 mm / Ub: 50 mm
Minimum measures (Liquid > 200°C):	T: 100 mm / L1: 40 mm / Ub: 50 mm
Accuracy:	5 / 10 / 15 mm
Ambient temperature	
- K5 / K10 / K15:	-30°C ... 130°C
- K5HTF / K10HTF / K15HTF:	-40°C ... 200°C
- K5HT / K10HT / K15HT:	-40°C ... 250°C
Option control unit / Page 276	
Control unit:	- Programmable - Hart-programmable / SIL2 - Profibus PA - Foundation Fieldbus

Approvals / Certificates

EAC

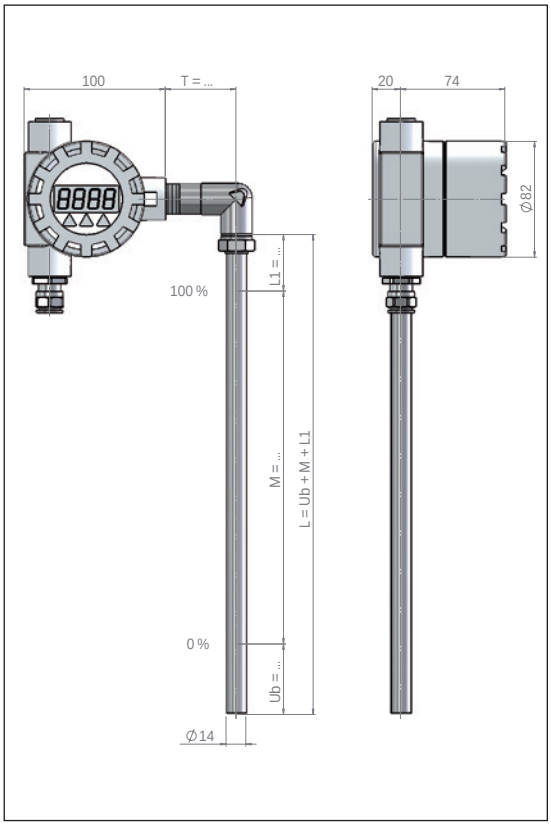

Type	**DAAVDA/../V/../EXDG-M..**
Electrical connection:	Stainless steel electropolished
Cable entry:	M20 x 1.5
Ingress protection class:	IP 68
Ambient temperature:	-40°C ... 60°C
Display:	4-digit LED display in red / Free scaling
Current input:	4 ... 20 mA
Level transmitter tube material quality:	Stainless steel
Mounting:	T-shaped sliding block or tension strap
Minimum measures (Liquid ≤ 200°C):	T: 50 mm / L1: 40 mm / Ub: 50 mm
Minimum measures (Liquid > 200°C):	T: 100 mm / L1: 40 mm / Ub: 50 mm
Accuracy:	5 / 10 / 15 mm
Ambient temperature	
- K5 / K10 / K15:	-30°C ... 130°C (Exd 120°C)
- K5HTF / K10HTF / K15HTF:	-40°C ... 180°C (Exd 120°C)
- K5HT / K10HT / K15HT:	-40°C ... 180°C (Exd 120°C)
Option control unit / Page 276	
Control unit:	- Programmable - Hart-programmable / SIL2 - Profibus PA - Foundation Fieldbus

Approvals / Certificates

ATEX / EAC

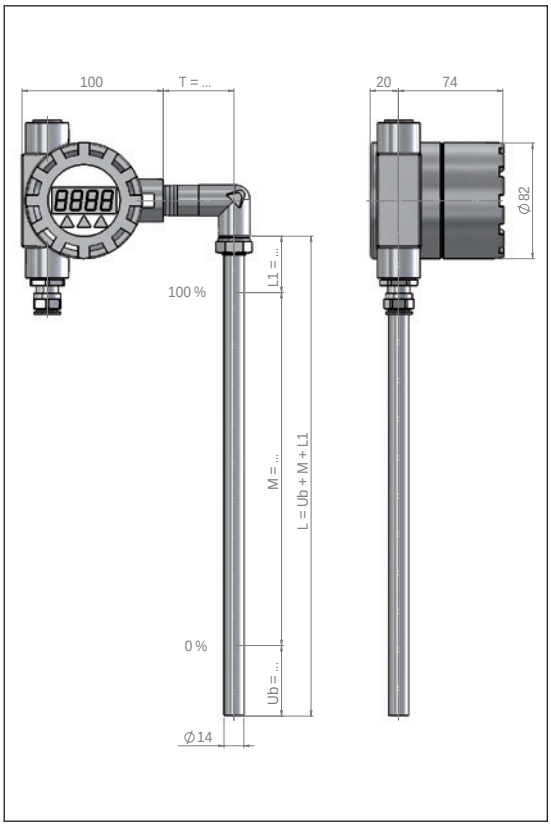

The bypass level indicator are based on a modular design and can be arranged individually.
Type key page 236 - 241

Heinrich Kübler AG
Ruessenstrasse 4 | CH-6340 Baar | Phone +41 (0)41 766 62 62 | Fax +41 (0)41 766 62 63 | E-Mail info@kubler.ch | Internet www.kubler.ch

Type **AVA/../V/..-M..**

Electrical connection:	Stainless steel A4 (SS316)
Cable entry:	M20 x 1.5
Ingress protection class:	IP 67
Ambient temperature:	-40°C ... 85°C
Level transmitter tube material quality:	Stainless steel
Mounting:	T-shaped sliding block or tension strap
Minimum measures (Liquid ≤ 200°C):	T: 50 mm / L1: 40 mm / Ub: 50 mm
Minimum measures (Liquid > 200°C):	T: 100 mm / L1: 40 mm / Ub: 50 mm

Accuracy

Accuracy:	5 / 10 / 15 mm
Ambient temperature / ATEX Exia:	
- K5 / K10 / K15:	-30°C ... 130°C
- K5HTF / K10HTF / K15HTF:	-40°C ... 200°C / -40°C ... 180°C
- K5HT / K10HT / K15HT:	-40°C ... 250°C / -40°C ... 180°C

Option control unit / Page 276

Control unit:	- Programmable - Hart-programmable / SIL2 - Profibus PA - Foundation Fieldbus

Approvals / Certificates

ABS / ATEX / BV / EAC / GL / LR

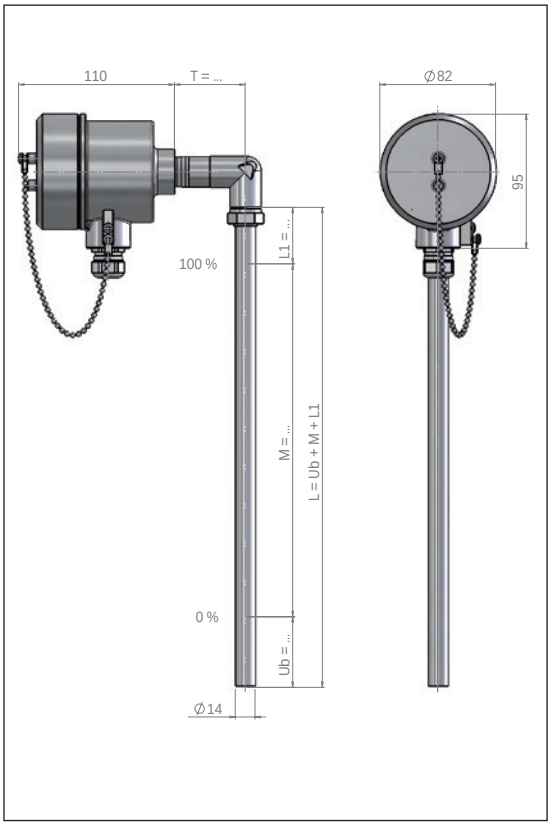

Type **AVM/../V/../..-M..**

Electrical connection:	Stainless steel A4 (SS316)
Cable entry:	M16 x 1.5
Ingress protection class:	IP 68
Ambient temperature:	-40°C ... 85°C / ATEX temperature p. 276
Level transmitter tube material quality:	Stainless steel
Mounting:	T-shaped sliding block or tension strap
Minimum measures:	L1: 40 mm / Ub: 50 mm

Accuracy

Accuracy:	0.2 mm
Ambient temperature / ATEX Exia:	
- K1:	-40 ... 125°C / ATEX temperature p. 276
- K1HT:	-40 ... 250°C / ATEX temperature p. 276
- K1HHT:	-40 ... 450°C / ATEX temperature p. 276

Control unit

- MST / MSTB:	- Programmable 4 ... 20 mA, 10 ... 30 VDC
- MSTH / MSTHB:	- Hart-programmable 4 ... 20 mA, 10 ... 30 VDC

Approvals / Certificates

ATEX / EAC / IECEX / SIL2

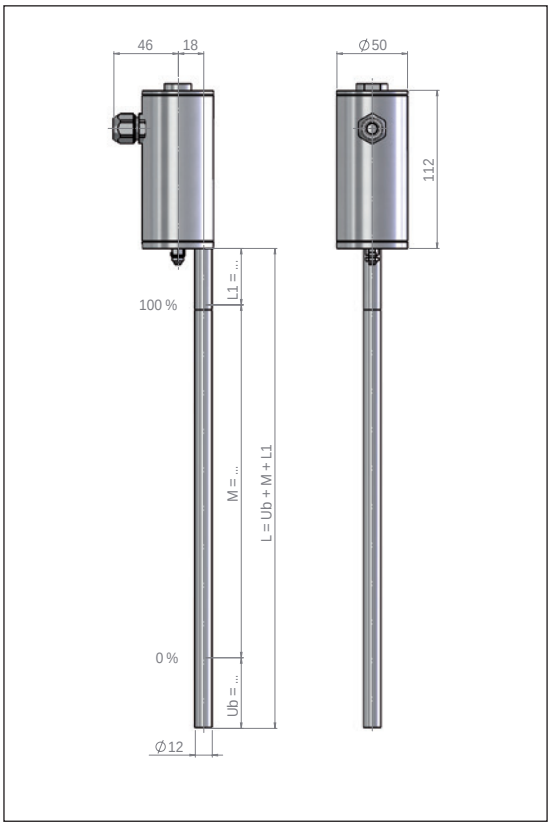

The bypass level indicator are based on a modular design and can be arranged individually.
Type key page 236 - 241

Type **AVDM/../V/../EXDG-M..**

Electrical connection:	Stainless steel A4 (SS316)
Cable entry:	M20 x 1.5
Ingress protection class:	IP 68
Ambient temperature:	ATEX temperature page 276
Level transmitter tube material quality:	Stainless steel
Mounting:	T-shaped sliding block or tension strap
Minimum measures:	L1: 40 mm / Ub: 50 mm

Accuracy

Accuracy:	0.2 mm
Ambient temperature - K1:	ATEX temperature page 276

Control unit

- MSTB:	- Programmable 4 ... 20 mA, 10 ... 30 VDC
- MSTHB:	- Hart-programmable 4 ... 20 mA, 10 ... 30 VDC

Approvals / Certificates

ATEX / EAC / IECEX / SIL2

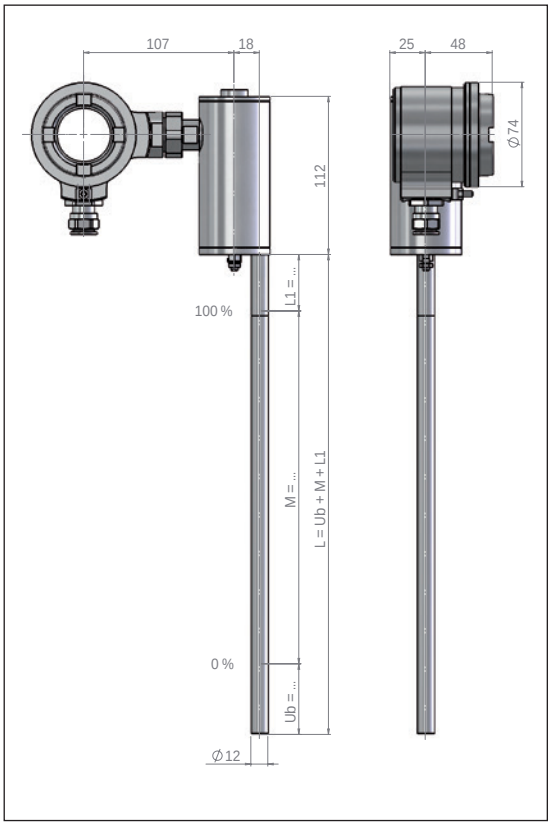

Type **DAAVDM/../V/../EXDG-M..**

Electrical connection:	Stainless steel A4 (SS316)
Cable entry:	M20 x 1.5
Ingress protection class:	IP 68
Ambient temperature:	ATEX temperature page 276
Level transmitter tube material quality:	Stainless steel
Mounting:	T-shaped sliding block or tension strap
Minimum measures:	L1: 40 mm / Ub: 50 mm

Accuracy

Accuracy:	0.2 mm
Ambient temperature - K1:	ATEX temperature page 276

Control unit

- MSTB:	- Programmable 4 ... 20 mA, 10 ... 30 VDC
- MSTHB:	- Hart-programmable 4 ... 20 mA, 10 ... 30 VDC

Approvals / Certificates

ATEX / EAC / IECEX / SIL2

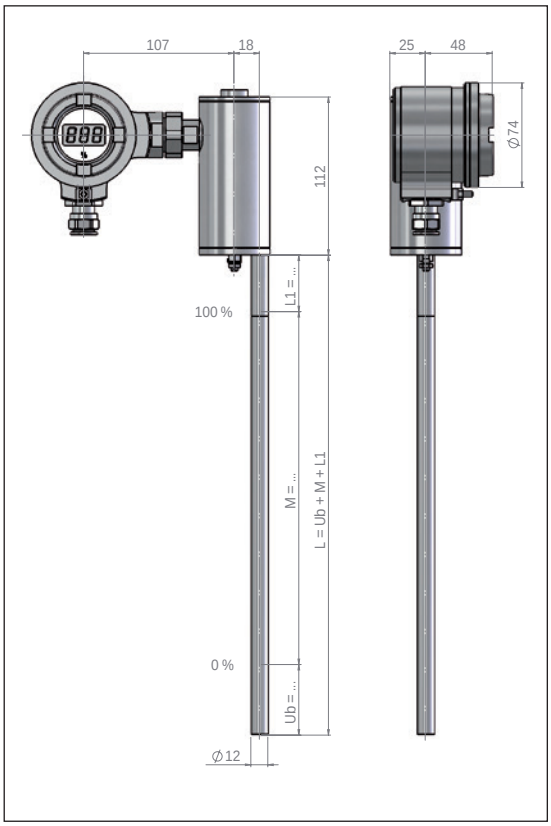

The bypass level indicator are based on a modular design and can be arranged individually.
Type key page 236 - 241

Heinrich Kübler AG
Ruessenstrasse 4 | CH-6340 Baar | Phone +41 (0)41 766 62 62 | Fax +41 (0)41 766 62 63 | E-Mail info@kubler.ch | Internet www.kubler.ch

Notes

The bypass level indicator are based on a modular design and can be arranged individually.
Type key page 236 - 241

Connection diagram

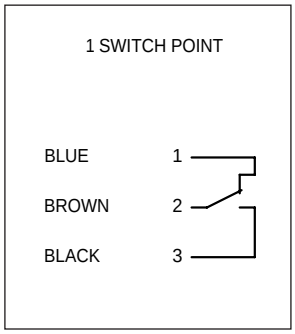

Change over (SPDT)

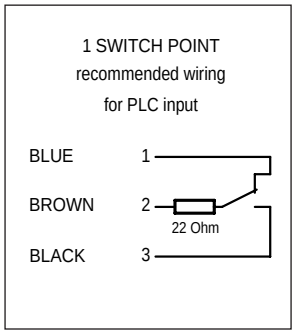

Change over (SPDT)
with resistor

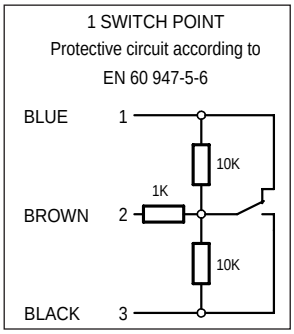

Change over (SPDT)
with NAMUR EN 60947

Approvals / Certificates

ATEX*

II 2G Ex ia IIC T6 - T1 Gb	II 2G Ex d IIC T6 - T4 Gb
II 2D Ex tb IIIC T80°C - T300°C Db IP6X	II 2D Ex tb IIIC T80°C - T120°C Db IP6X

Type of protection intrinsic safety Ex ia IIC	I_i ≤ 100 mA		
Type of protection intrinsic safety Ex ia IIC with option /R22 (resistor)	I_i ≤ 100 mA		
Type of protection intrinsic safety Ex ia IIC with option /N (NAMUR EN 60947)	U_i ≤ 15 VDC	I_i ≤ 60 mA	
Type of protection „flameproof enclosure“	U_N ≤ 250 VDC/AC	I_N ≤ 100 mA	
Type of protection „flameproof enclosure“ with option /R22 (resistor)	U_N ≤ 250 VDC/AC	I_N ≤ 100 mA	P_V ≤ 0.21 W
Type of protection „flameproof enclosure“ with option /N (NAMUR EN 60947)	U_N ≤ 15 VDC	I_N ≤ 60 mA	

The bypass level indicator are based on a modular design and can be arranged individually.
Type key page 236 - 241

* = The approval is dependent on the equipment combination

Heinrich Kübler AG
Ruessenstrasse 4 | CH-6340 Baar | Phone +41 (0)41 766 62 62 | Fax +41 (0)41 766 62 63 | E-Mail info@kubler.ch | Internet www.kubler.ch

Type	**BGU/../../../..** **BGU/../../../../EXIAG**
Housing:	Aluminium anodized
Ingress protection class:	IP 65
Mounting:	Right or left at the magnetic roller indicator
Ambient temperature / ATEX Exia:	
- with PVC connection cable:	-20°C ... 80°C / -20°C ... 80°C
- with Silikon connection cable:	-60°C ... 180°C / -25°C ... 180°C
- with PUR connection cable:	-40°C ... 80°C / -25°C ... 80°C
- with Radox connection cable:	-35°C ... 120°C / -25°C ... 120°C
Switch function	
Function:	Change over (SPDT)
Switch behaviour:	Bistable
Switching capacity:	230 V / 0.5 A / 40 VA
Switching capacity / ATEX Exia:	Exia 100 mA / Exia NAMUR 60 mA
Switching hysteresis:	5 mm ... 7 mm
Options	
- Switch option .. /R22:	Resistor 22 Ohm / 0.21 W
- Switch option .. /N:	NAMUR EN 60947
Approvals / Certificates	
ABS / ATEX / BV / EAC / GL / LR / SIL1	

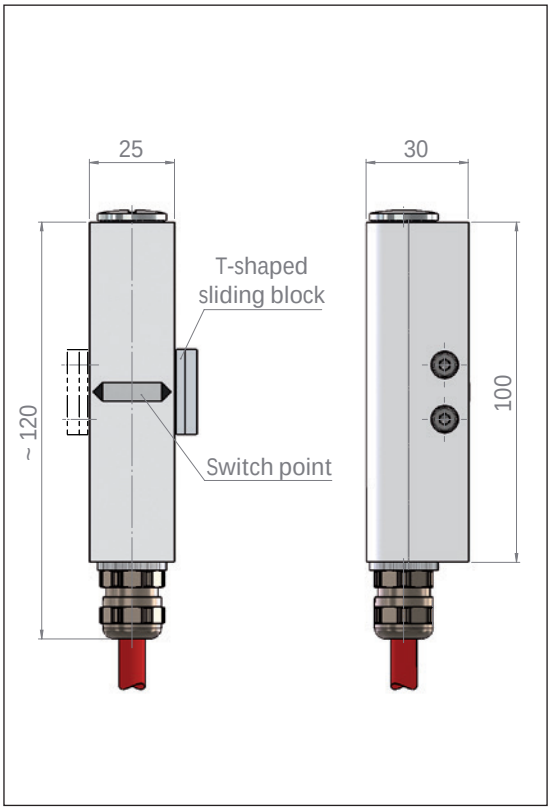

Type	**BGUD/../../../../EXDG**
Housing:	Aluminium anodized
Ingress protection class:	IP 65
Mounting:	Right or left at the magnetic roller indicator
Ambient temperature:	
- with PVC connection cable:	-20°C ... 80°C
- with Silikon connection cable:	-25°C ... 120°C
- with PUR connection cable:	-25°C ... 80°C
- with Radox connection cable:	-25°C ... 120°C
Switch function	
Function:	Change over (SPDT)
Switch behaviour:	Bistable
Switching capacity:	U_N 250 V / P_{SN} 50 W/VA / P_{FN} 700 mW
- NAMUR EN 60947:	U_N 15 VDC / I_N 60 mA
- with resistor:	U_N 250 V / I_N 100 mA
Switching hysteresis:	5 mm ... 7 mm
Options	
- Switch option .. /R22:	Resistor 22 Ohm / 0.21 W
- Switch option .. /N:	NAMUR EN 60947
Approvals / Certificates	
ABS / ATEX / BV / EAC / GL / LR / SIL1	

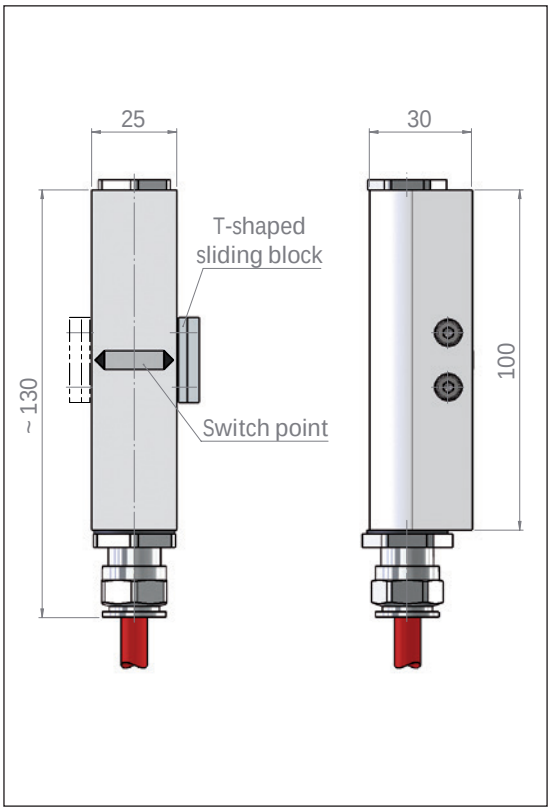

The bypass level indicator are based on a modular design and can be arranged individually.
Type key page 236 - 241

Type	**BGUALE/..** **BGUALE/../EXIAG**
Housing:	Aluminium anodized
Cable entry:	M20 x 1.5
Ingress protection class:	IP 65
Mounting:	Right or left at the magnetic roller indicator
Ambient temperature / ATEX Exia:	-40°C ... 130°C / -25°C ... 130°C

Switch function	
Function:	Change over (SPDT)
Switch behaviour:	Bistable
Switching capacity:	230 V / 0.5 A / 40 VA
Switching capacity / ATEX Exia:	Exia 100 mA / Exia NAMUR 60 mA
Switching hysteresis:	5 mm ... 7 mm

Options	
- Switch option .. /R22:	Resistor 22 Ohm / 0.21 W
- Switch option .. /N:	NAMUR EN 60947

Approvals / Certificates

ABS / ATEX / BV / EAC / GL / LR / SIL1

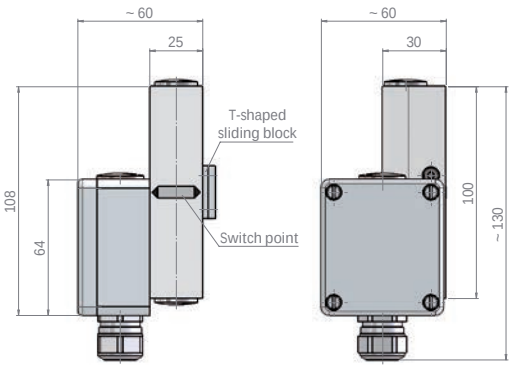

Type	**BGUASQ/..** **BGUASQ/../EXIAG**
Housing:	Aluminium anodized
Ingress protection class:	IP 65
Mounting:	Right or left at the magnetic roller indicator
Ambient temperature / ATEX Exia:	-25°C ... 50°C
- ATEX Exia with resistor:	-25°C ... 45°C
- ATEX Exia with NAMUR EN 60947:	-25°C ... 45°C

Switch function	
Function:	Change over (SPDT)
Switch behaviour:	Bistable
Switching capacity:	230 V / 0.5 A / 40 VA
Switching capacity / ATEX Exia:	Exia 100 mA / Exia NAMUR 60 mA
Switching hysteresis:	5 mm ... 7 mm

Options	
- Switch option .. /R22:	Resistor 22 Ohm / 0.21 W
- Switch option .. /N:	NAMUR EN 60947

Approvals / Certificates

ATEX / EAC / SIL1

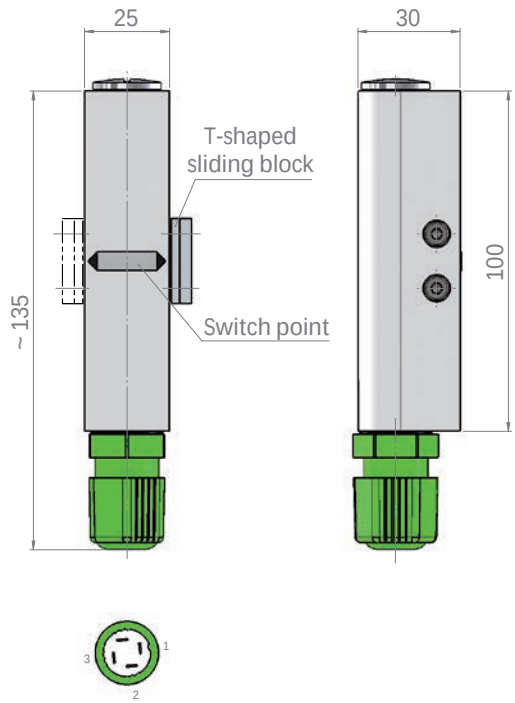

The bypass level indicator are based on a modular design and can be arranged individually.
Type key page 236 - 241

Heinrich Kübler AG
Ruessenstrasse 4 | CH-6340 Baar | Phone +41 (0)41 766 62 62 | Fax +41 (0)41 766 62 63 | E-Mail info@kubler.ch | Internet www.kubler.ch

Type	**BGUASMA/../../../..** **BGUASMA/../../../../EXIAG**
Housing:	Aluminium anodized
Connector:	M12
Ingress protection class:	IP 65
Mounting:	Right or left at the magnetic roller indicator
Ambient temperature:	-25°C ... 90°C
Switch function	
Function:	Change over (SPDT)
Switch behaviour:	Bistable
Switching capacity:	230 V / 0.5 A / 40 VA
Switching capacity / ATEX Exia:	Exia 100 mA / Exia NAMUR 60 mA
Switching hysteresis:	5 mm ... 7 mm
Options	
- Switch option .. /R22:	Resistor 22 Ohm / 0.21 W
- Switch option .. /N:	NAMUR EN 60947
Approvals / Certificates	
ATEX / EAC / SIL1	

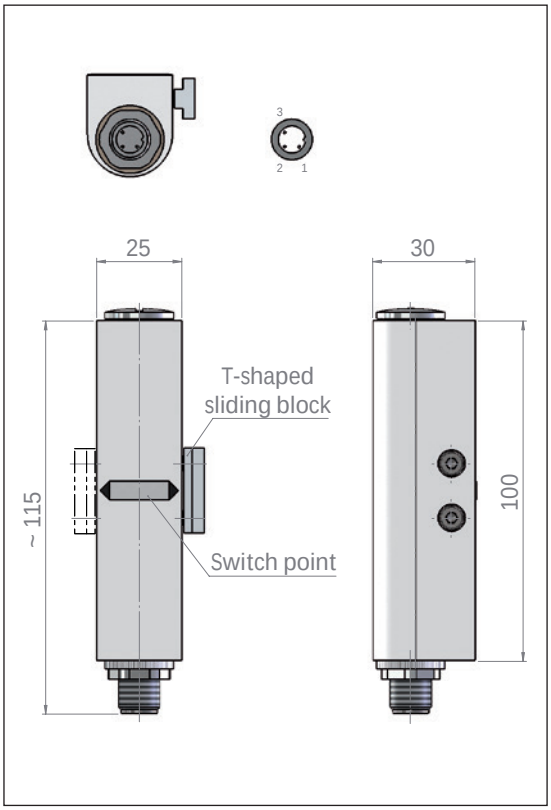

Type	**RU60/../../../..** **RU60/../../../../EXIAG**	**RU73/../../../..** **RU73/../../../../EXIAG**
Housing:	Aluminium anodized	
Ingress protection class:	IP 68	
Mounting:	Free positionable on the chamber RU73.. (for chamber ≥ Ø 73 mm)	
Ambient temperature:		
- with PVC connection cable:	-20°C ... 80°C	
- with Silikon connection cable:	-40°C ... 180°C	
- with PUR connection cable:	-40°C ... 80°C	
- with Radox connection cable:	-35°C ... 120°C	
Switch function		
Function:	Change over (SPDT)	
Switch behaviour:	Bistable	
Switching capacity:	230 V / 0.5 A / 30 VA	
Switching capacity / ATEX Exia:	Exia 100 mA / Exia NAMUR 60 mA	
Switching hysteresis:	5 mm ... 7 mm	
Options		
- Switch option .. /R22:	Resistor 22 Ohm / 0.21 W	
- Switch option .. /N:	NAMUR EN 60947	
Approvals / Certificates		
ABS / ATEX / BV / EAC / GL / LR / SIL1		

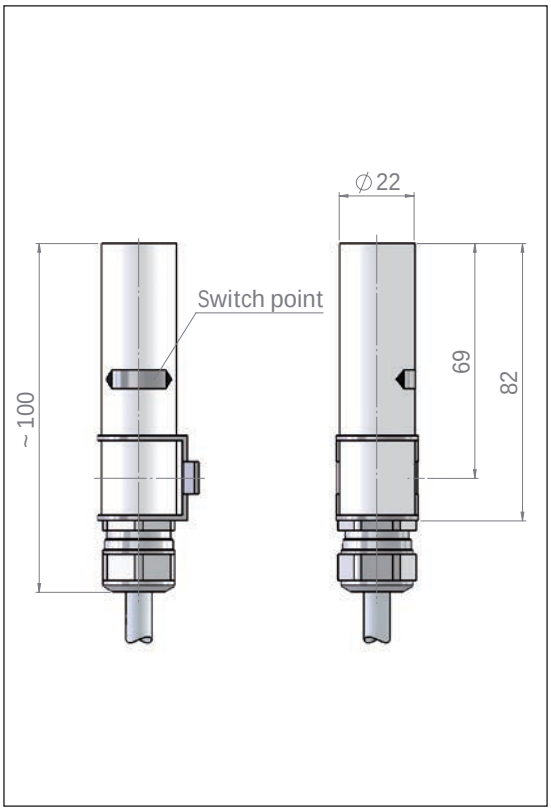

The bypass level indicator are based on a modular design and can be arranged individually.
Type key page 236 - 241

Type	RUV60/../../../.. RUV60/../../../../EXIAG	RUV73/../../../.. RUV73/../../../../EXIAG

Housing:	Stainless steel
Ingress protection class:	IP 68
Mounting:	Free positionable on the chamber RUV73.. (for chamber ≥ Ø 73 mm)
Ambient temperature:	
- with PVC connection cable:	-20°C ... 80°C
- with Silikon connection cable:	-40°C ... 180°C
- with PUR connection cable:	-40°C ... 80°C
- with Radox connection cable:	-35°C ... 120°C

Switch function	
Function:	Change over (SPDT)
Switch behaviour:	Bistable
Switching capacity:	230 V / 0.5 A / 30 VA
Switching capacity / ATEX Exia:	Exia 100 mA / Exia NAMUR 60 mA
Switching hysteresis:	5 mm ... 7 mm

Options	
- Switch option .. /R22:	Resistor 22 Ohm / 0.21 W
- Switch option .. /N:	NAMUR EN 60947

Approvals / Certificates

ABS / ATEX / BV / EAC / GL / LR / SIL1

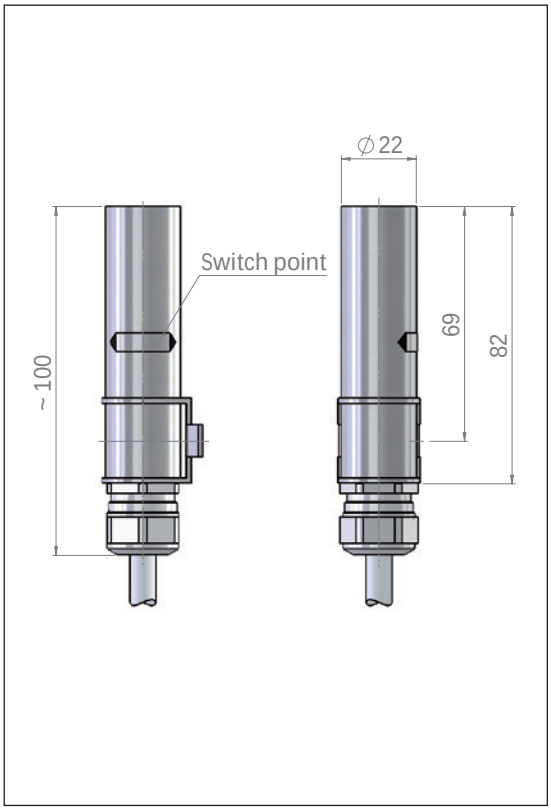

Type	RUVD60/../../../../EXDG RUVD73/../../../../EXDG

Housing:	Stainless steel
Ingress protection class:	IP 68
Mounting:	Free positionable on the chamber RUVD73.. (for chamber ≥ Ø 73 mm)
Ambient temperature / ATEX Exia:	
- with PVC connection cable:	-20°C ... 80°C
- with Silikon connection cable:	-40°C ... 120°C
- with PUR connection cable:	-40°C ... 80°C
- with Radox connection cable:	-35°C ... 120°C

Switch function	
Function:	Change over (SPDT)
Switch behaviour:	Bistable
Switching capacity:	U_N 250 V / P_{SN} 50 W/VA / P_{FN} 700 mW
- NAMUR EN 60947:	U_N 15 VDC / I_N 60 mA
- with resistor:	U_N 250 V / I_N 100 mA
Switching hysteresis:	5 mm ... 7 mm

Options	
- Switch option .. /R22:	Resistor 22 Ohm / 0.21 W
- Switch option .. /N:	NAMUR EN 60947

Approvals / Certificates

ABS / ATEX / BV / EAC / GL / LR / SIL1

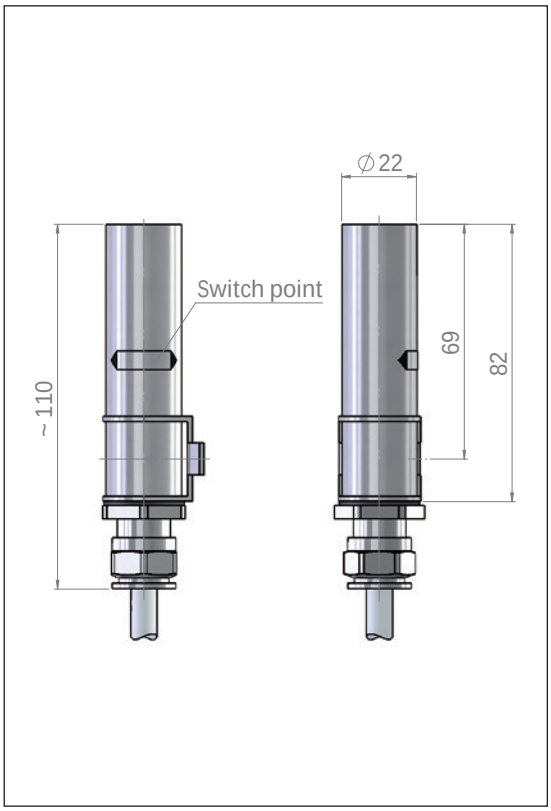

The bypass level indicator are based on a modular design and can be arranged individually.
Type key page 236 - 241

Heinrich Kübler AG
Ruessenstrasse 4 | CH-6340 Baar | Phone +41 (0)41 766 62 62 | Fax +41 (0)41 766 62 63 | E-Mail info@kubler.ch | Internet www.kubler.ch

Type	**ALFU/..** **ALFU/../EXIAG**
Housing:	Aluminium coated RAL 9006
Cable entry:	M20 x 1.5
Ingress protection class:	IP 65
Mounting:	Free positionable on the chamber
Ambient temperature:	-40°C ... 300°C
- with 22 Ohm Resistor:	-40°C ... 220°C
- with NAMUR EN 60947:	-40°C ... 220°C
Switch function	
Function:	Change over (SPDT)
Switch behaviour:	Bistable
Switching capacity:	230 V / 0.5 A / 40 VA
Switching capacity / ATEX Exia:	Exia 100 mA / Exia NAMUR 60 mA
Switching hysteresis:	5 mm ... 7 mm
Options	
- Switch option .. /R22:	Resistor 22 Ohm / 0.21 W
- Switch option .. /N:	NAMUR EN 60947
Approvals / Certificates	
ATEX / EAC / SIL1	

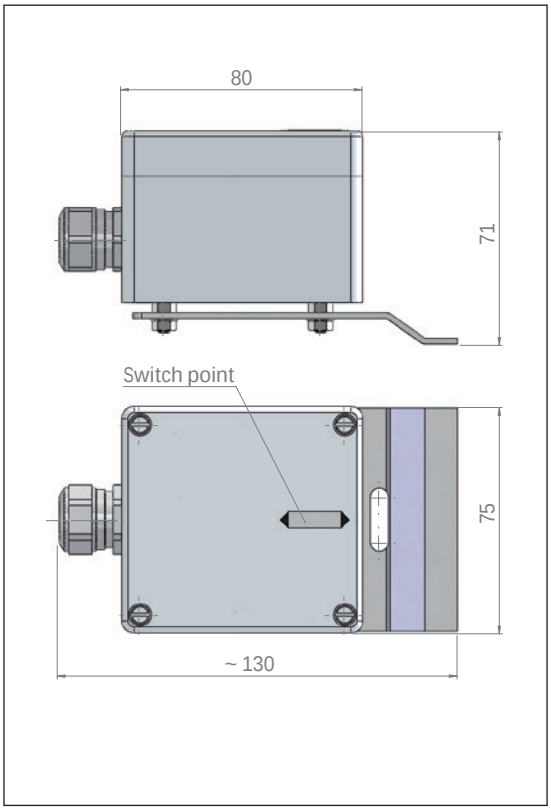

Type	**ALFI** **ALFI/EXIAG**
Housing:	Aluminium coated RAL 9006
Cable entry:	M20 x 1.5
Ingress protection class:	IP 65
Mounting:	Free positionable on the chamber
Ambient temperature / ATEX Exia:	-40°C ... 100°C / -40°C ... 73°C
Power supply:	5.0 ... 25 VDC
Nominal voltage:	8.0 VDC (R_i ~ 1 Ohm)
Self inductance:	100 mH
Self capacitance:	30 nF
Switch function	
Function:	NAMUR Normally closed (NC) (Proximity switch)
Switch behaviour:	Bistable
Intrinsic safety data:	U_i = 16 VDC I_i = 25 mA P_i = 34 mW
Approvals / Certificates	
ATEX / EAC / SIL1	

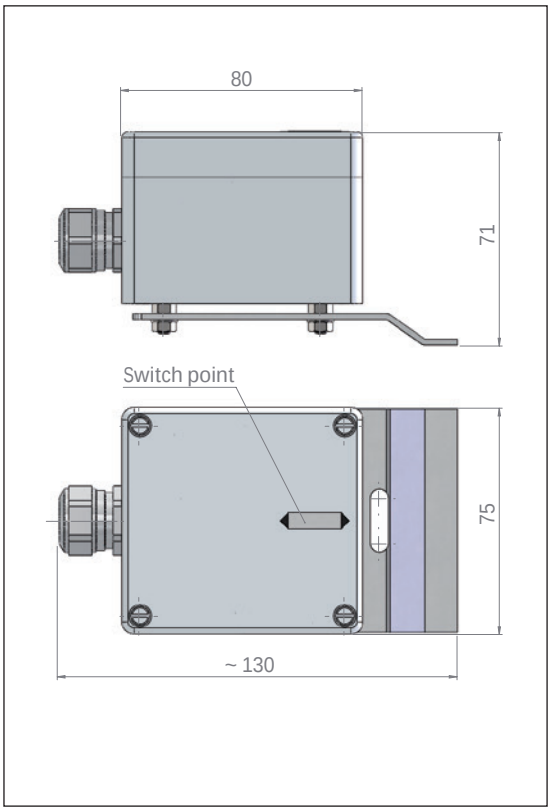

The bypass level indicator are based on a modular design and can be arranged individually.
Type key page 236 - 241

Type	**ALEU/..** **ALEU/../EXIAG**
Housing:	Aluminium anodized
Cable entry:	M20 x 1.5
Ingress protection class:	IP 65
Mounting:	Free positionable on the chamber
Ambient temperature / ATEX Exia:	-40°C ... 130°C / -25°C ... 130°C
Switch function	
Function:	Change over (SPDT)
Switch behaviour:	Bistable
Switching capacity:	230 V / 0.5 A / 40 VA
Switching capacity / ATEX Exia:	Exia 100 mA / Exia NAMUR 60 mA
Switching hysteresis:	5 mm ... 7 mm
Options	
- Switch option .. /R22:	Resistor 22 Ohm / 0.21 W
- Switch option .. /N:	NAMUR EN 60947
Approvals / Certificates	
ABS / ATEX / BV / EAC / GL / LR / SIL1	

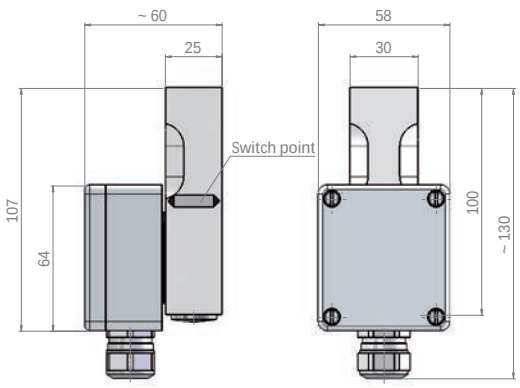

Type	**APAVU/..** **APBVU/../EXIAG**
Housing:	Polyester / Stainless steel
Cable entry:	M20 x 1.5
Ingress protection class:	IP 65
Mounting:	Free positionable on the chamber
Ambient temperature:	-10°C ... 100°C
Switch function	
Function:	Change over (SPDT)
Switch behaviour:	Bistable
Switching capacity:	230 V / 0.5 A / 40 VA
Switching capacity / ATEX Exia:	Exia 100 mA / Exia NAMUR 60 mA
Switching hysteresis:	5 mm ... 7 mm
Options	
- Switch option .. /R22:	Resistor 22 Ohm / 0.21 W
- Switch option .. /N:	NAMUR EN 60947
Approvals / Certificates	
ATEX / EAC / SIL1	

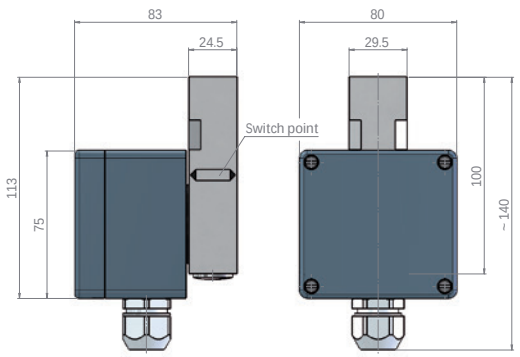

The bypass level indicator are based on a modular design and can be arranged individually.
Type key page 236 - 241

Heinrich Kübler AG
Ruessenstrasse 4 | CH-6340 Baar | Phone +41 (0)41 766 62 62 | Fax +41 (0)41 766 62 63 | E-Mail info@kubler.ch | Internet www.kubler.ch

Type	**ALDAU/../EXDG**
Housing:	Aluminium coated RAL 9006
Cable entry:	M20 x 1.5
Ingress protection class:	IP 65
Mounting:	Free positionable on the chamber
Ambient temperature:	-40°C ... 100°C

Switch function

Function:	Change over (SPDT)
Switch behaviour:	Bistable
Switching capacity:	U_N 250 V / P_{SN} 50 W/VA / P_{FN} 700 mW
- NAMUR EN 60947:	U_N 15 VDC / I_N 60 mA
- with resistor:	U_N 250 V / I_N 100 mA
Switching hysteresis:	5 mm ... 7 mm

Options

- Switch option .. /R22:	Resistor 22 Ohm / 0.21 W
- Switch option .. /N:	NAMUR EN 60947

Approvals / Certificates

ATEX / EAC / SIL1

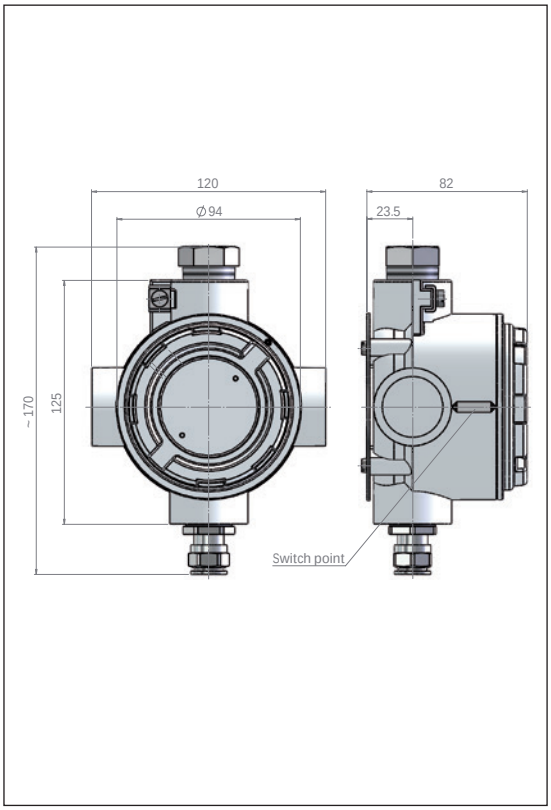

The bypass level indicator are based on a modular design and can be arranged individually.
Type key page 236 - 241

Heinrich Kübler AG
Ruessenstrasse 4 | CH-6340 Baar | Phone +41 (0)41 766 62 62 | Fax +41 (0)41 766 62 63 | E-Mail info@kubler.ch | Internet www.kubler.ch

Type	**AIT** **AHT**

Armaflex isolation AIT	
Material quality:	Cellular plastic based on synthetic rubber
Fire behaviour:	Self-extinguishing, not drippy, not flammable
Nominal thickness:	32 mm
Ambient temperature:	-50°C ... 105°C
UV-resistance:	No
Approvals:	-

Armaflex isolation AHT	
Material quality:	Cellular plastic based on synthetic rubber
Fire behaviour:	Self-extinguishing, not drippy, not flammable
Nominal thickness:	25 mm
Ambient temperature:	-50°C ... 150°C
UV-resistance:	Yes
Approvals:	-

Type	**H..A** **H..B**

Self-regulating antifreeze heat tracing	
Type:	H75A H75B acc. to EExe / T4
Terminal box:	GFK black with cable entry M25
Protective shell:	Fluorpolymer
Power supply:	230V AC
Power output:	76 W/m at 10°C
Holding temperature:	~10°C / Frost protection (32 mm Isolation necessary)
Steam-flushing:	No
Ambient temperature:	-40°C ... 75°C
Approvals / Certificates:	ATEX

Self-regulating antifreeze heat tracing	
Type:	H150A H150B acc. to EExe / T2
Terminal box:	GFK black with cable entry M25
Protective shell:	Fluorpolymer
Power supply:	230V AC
Power output:	50 W/m at 10°C
Holding temperature:	~10°C / Frost protection (32 mm Isolation necessary)
Steam-flushing:	Yes
Ambient temperature:	-40°C ... 150°C
Approvals / Certificates:	ATEX

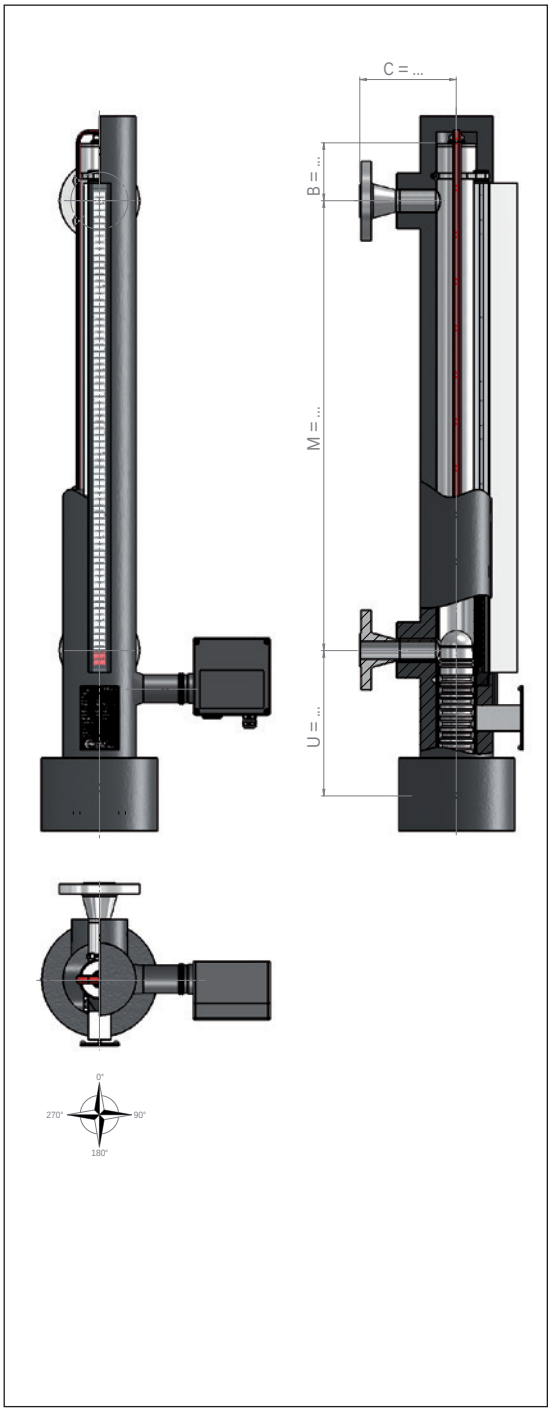

Approvals / Certificates

The bypass level indicator are based on a modular design and can be arranged individually.
Type key page 236 - 241

Heinrich Kübler AG
Ruessenstrasse 4 | CH-6340 Baar | Phone +41 (0)41 766 62 62 | Fax +41 (0)41 766 62 63 | E-Mail info@kubler.ch | Internet www.kubler.ch

Type	**SW**
Rock-wool isolation SW	
Material quality:	Rock-woll with crome-nickel cover (Removable)
Nominal thickness:	~50 mm
Ambient temperature:	-50°C ... 750°C
UV-resistance:	Yes
Approvals:	ATEX

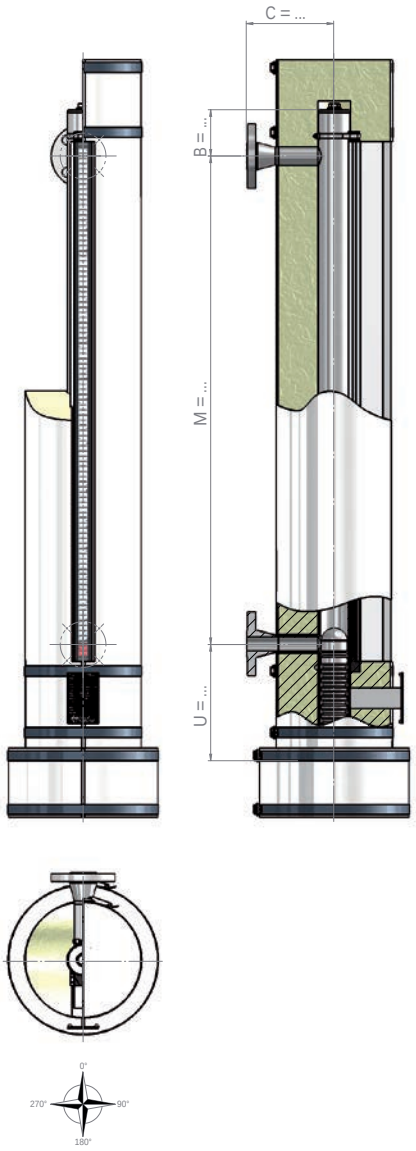

Approvals / Certificates

The bypass level indicator are based on a modular design and can be arranged individually.
Type key page 236 - 241

Chamber end top

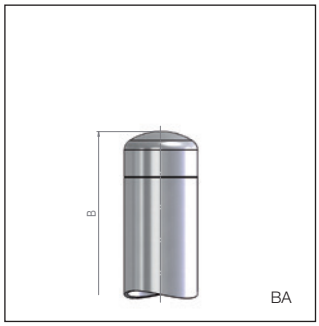

Tube cap

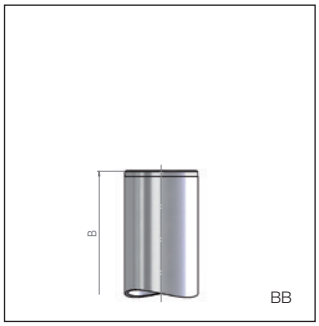

Tube plate

Tube plate with
vent plug G ≤ 1/2“

Tube plate with
vent plug G ≥ 3/4“ / NPT ≥ 1/2“

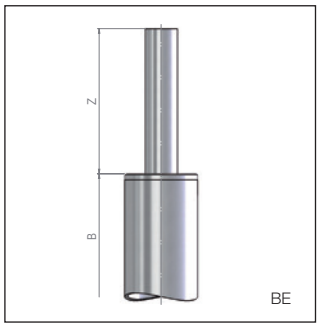

Tube plate with
vent welding stub end

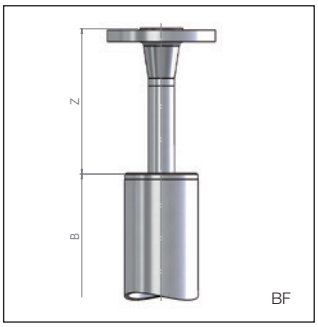

Tube plate with
vent flange

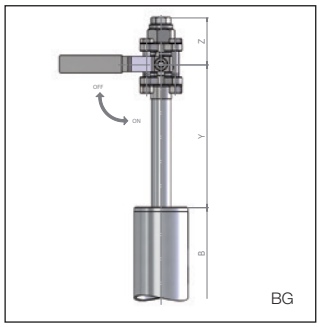

Tube plate with
vent ball valve

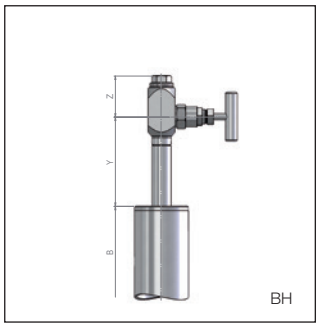

Tube plate with
vent needle valve

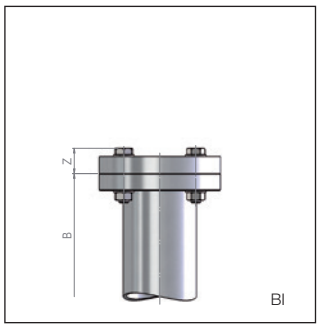

Flanged connection

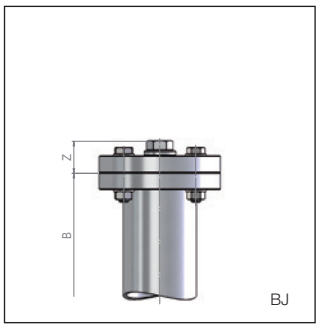

Flanged connection with
vent plug G ≤ 1/2“

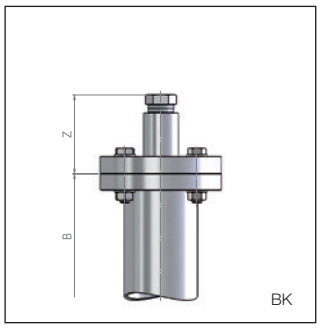

Flanged connection with
vent plug G ≥ 3/4“ / NPT ≥ 1/2“

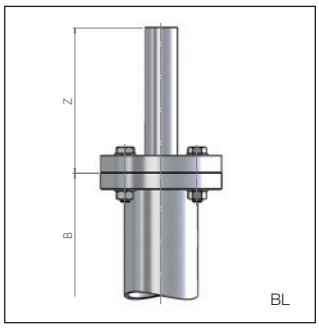

Flanged connection with
vent welding stub end

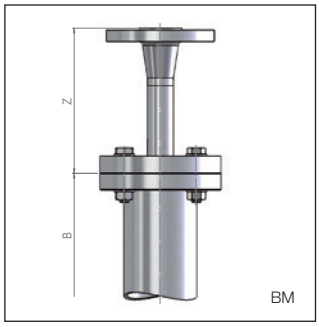

Flanged connection with
vent flange

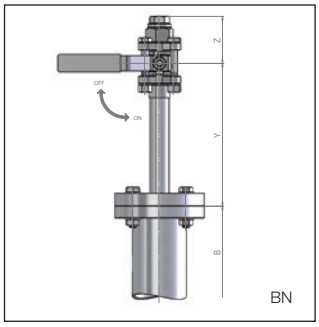

Flanged connection with
vent ball valve

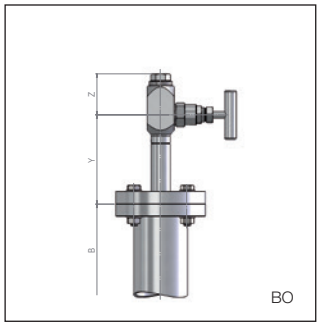

Flanged connection with
vent needle valve

The bypass level indicator are based on a modular design and can be arranged individually.
Type key page 236 - 241

Heinrich Kübler AG
Ruessenstrasse 4 | CH-6340 Baar | Phone +41 (0)41 766 62 62 | Fax +41 (0)41 766 62 63 | E-Mail info@kubler.ch | Internet www.kubler.ch

Chamber end top

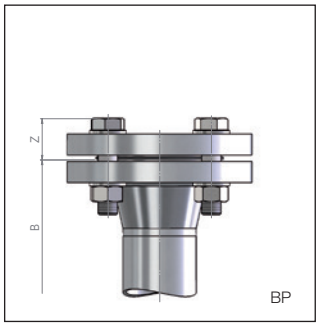

Flanged connection EN/ANSI

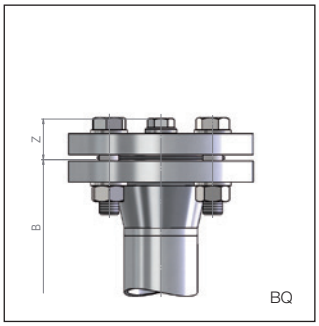

Flanged connection EN/ANSI
with vent plug G..

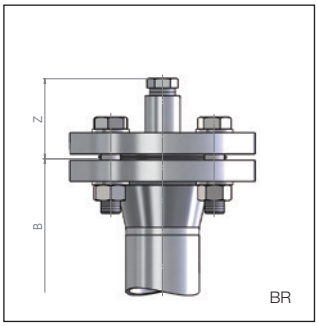

Flanged connection EN/ANSI
with vent plug NPT..

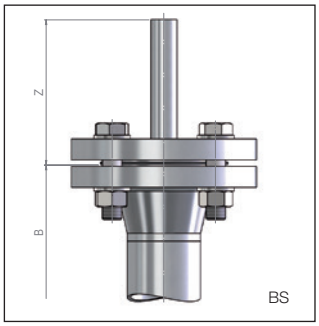

Flanged connection EN/ANSI
with vent welding stub end

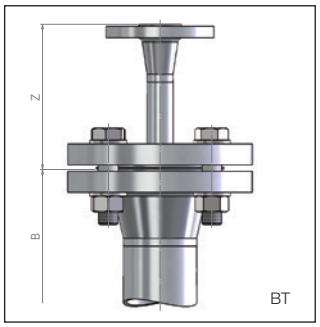

Flanged connection EN/ANSI
with vent flange

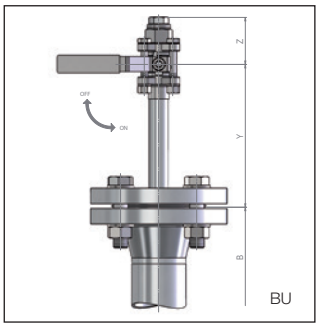

Flanged connection EN/ANSI
with vent ball valve

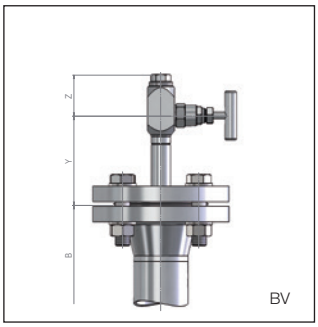

Flanged connection EN/ANSI
with vent needle valve

Pressure rating	**16 / 150#**			**40 / 300#**			**63 / 600#**			**160 / 1500#**			**250-400 / 2500#**		
	B	Y	Z	B	Y	Z	B	Y	Z	B	Y	Z	B	Y	Z
							Measure in ~ mm								
Tube cap	90	-	-	90	-	-	-	-	-	-	-	-	-	-	-
Tube plate	90	-	-	90	-	-	90	-	-	90	-	-	90	-	-
Tube plate with vent plug G1/2“	90	-	20	90	-	20	90	-	20	-	-	-	-	-	-
Tube plate with vent plug NPT1/2“	90	-	30	90	-	30	90	-	30	90	-	30	90	-	30
Tube plate with vent welding stub end	90	-	120	90	-	120	90	-	120	90	-	120	90	-	120
Tube plate with vent flange	90	-	120	90	-	120	90	-	120	90	-	120	90	-	120
Tube plate with vent ball valve G..	90	180	55	90	180	55	90	180	55	-	-	-	-	-	-
Tube plate with vent needle valve G..	90	120	50	90	120	50	90	120	50	-	-	-	-	-	-
Flanged connection	120	-	30	120	-	30	-	-	-	-	-	-	-	-	-
Flanged connection with vent plug G1/2“	120	-	35	120	-	35	-	-	-	-	-	-	-	-	-
Flanged connection with vent plug NPT1/2“	120	-	65	120	-	65	-	-	-	-	-	-	-	-	-
Flanged connection with vent welding stub end	120	-	120	120	-	120	-	-	-	-	-	-	-	-	-
Flanged connection with vent flange	120	-	120	120	-	120	-	-	-	-	-	-	-	-	-
Flanged connection with vent ball valve G..	120	180	55	120	180	55	-	-	-	-	-	-	-	-	-
Flanged connection with vent needle valve G..	120	120	50	120	120	50	-	-	-	-	-	-	-	-	-
Flanged connection EN/ANSI	160	-	35	160	-	35	160	-	50	200	-	100	250	-	115
Flanged connection EN/ANSI with vent plug G1/2“	160	-	35	160	-	35	160	-	50	-	-	-	-	-	-
Flanged connection EN/ANSI with vent plug NPT1/2“	160	-	65	160	-	65	160	-	70	200	-	100	250	-	115
Flanged connection EN/ANSI with vent welding stub end	160	-	120	160	-	120	160	-	120	200	-	120	250	-	120
Flanged connection EN/ANSI with vent flange	160	-	120	160	-	120	160	-	160	200	-	200	250	-	200
Flanged connection EN/ANSI with vent ball valve G..	160	200	55	160	200	55	160	200	55	-	-	-	-	-	-
Flanged connection EN/ANSI with vent needle valve G..	160	120	50	160	120	50	160	120	50	-	-	-	-	-	-
Flanged connection EN/ANSI with vent needle valve NPT..	160	120	50	160	120	50	160	120	50	200	200	55	250	200	55

The bypass level indicator are based on a modular design and can be arranged individually.
Type key page 236 - 241

Chamber end bottom

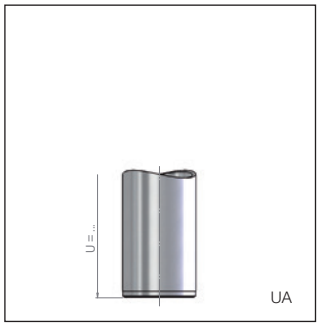

Tube plate

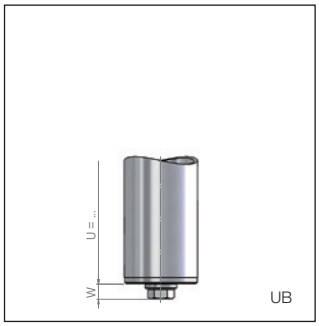

Tube plate with
drain plug G ≤ 1/2“

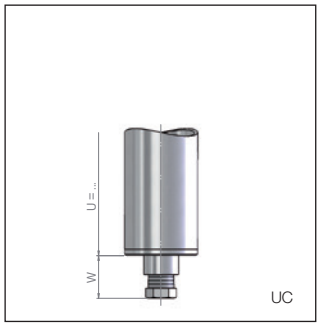

Tube plate with
drain plug G ≥ 3/4“ / NPT ≥ 1/2“

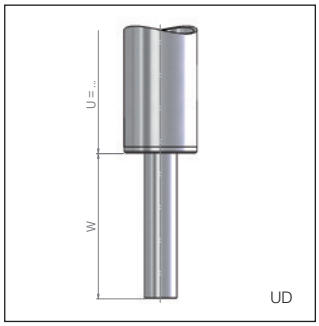

Tube plate with
drain welding stub end

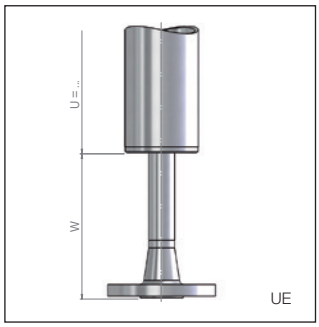

Tube plate with
drain flange

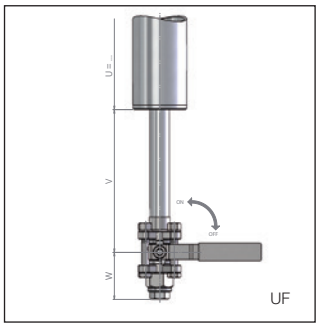

Tube plate with
drain ball valve

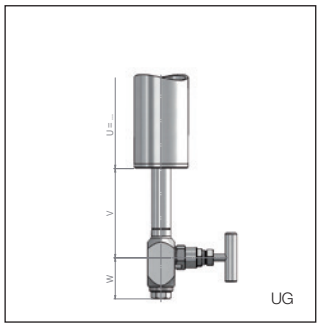

Tube plate with
drain needle valve

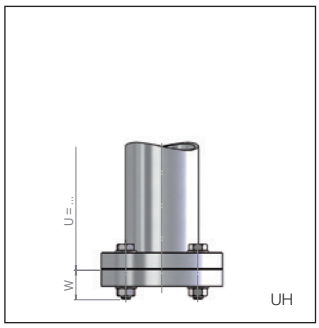

Flanged connection

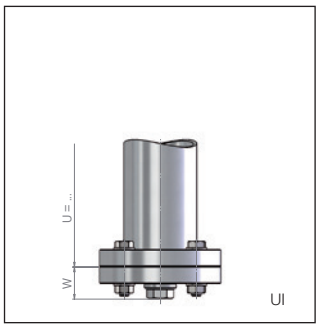

Flanged connection with
drain plug G ≤ 1/2“

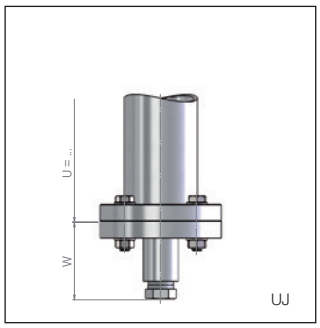

Flanged connection with
drain plug G ≥ 3/4“ / NPT ≥ 1/2“

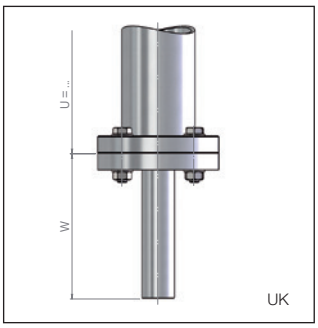

Flanged connection with
drain welding stub end

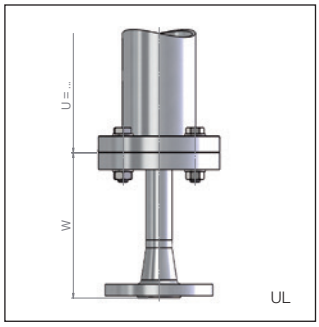

Flanged connection with
drain flange

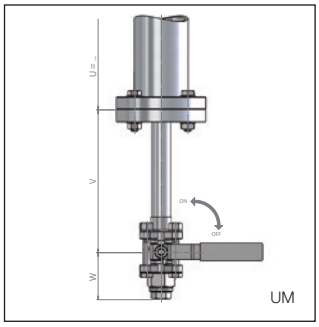

Flanged connection with
drain ball valve

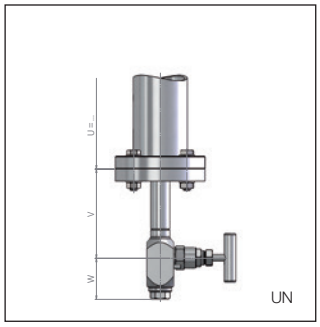

Flanged connection with
drain needle valve

The bypass level indicator are based on a modular design and can be arranged individually.
Type key page 236 - 241

Heinrich Kübler AG
Ruessenstrasse 4 | CH-6340 Baar | Phone +41 (0)41 766 62 62 | Fax +41 (0)41 766 62 63 | E-Mail info@kubler.ch | Internet www.kubler.ch

Chamber end bottom

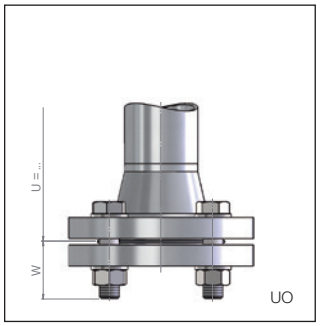

Flanged connection EN/ANSI

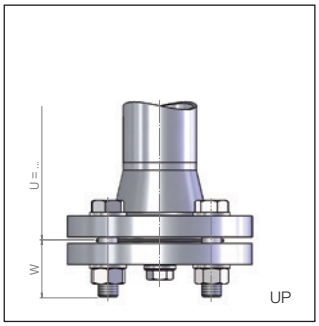

Flanged connection EN/ANSI with drain plug G..

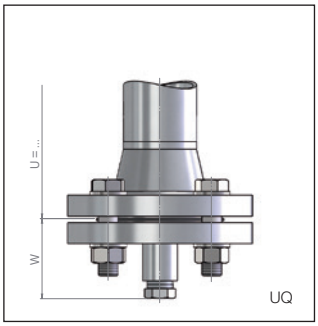

Flanged connection EN/ANSI with drain plug NPT..

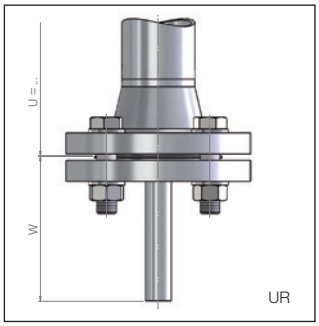

Flanged connection EN/ANSI with drain welding stub end

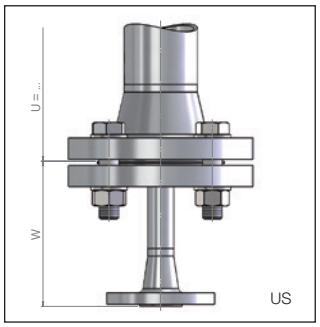

Flanged connection EN/ANSI with drain flange

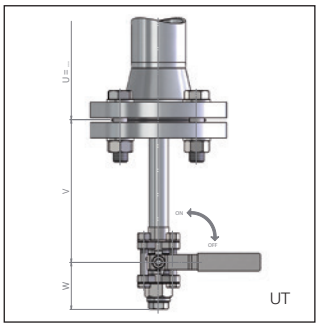

Flanged connection EN/ANSI with drain ball valve

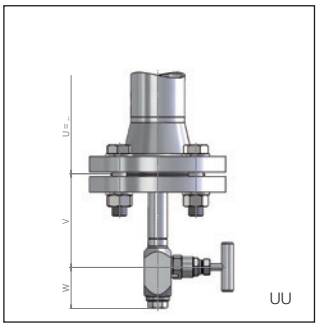

Flanged connection EN/ANSI with drain needle valve

Pressure rating	16 / 150#			40 / 300#			63 / 600#			160 / 1500#			250-400 / 2500#		
	U	V	W	U	V	W	U	V	W	U	V	W	U	V	W
	Measure in ~ mm														
Tube plate	...^{S}	-	-	...^{S}	-	-	...^{S}	-	-	...^{S}	-	-	...^{S}	-	-
Tube plate with drain plug G1/2“	...^{S}	-	20	...^{S}	-	20	...^{S}	-	20	...^{S}	-	-	...^{S}	-	-
Tube plate with drain plug NPT1/2“	...^{S}	-	30	...^{S}	-	30	...^{S}	-	30	...^{S}	-	30	...^{S}	-	30
Tube plate with drain welding stub end	...^{S}	-	120	...^{S}	-	120	...^{S}	-	120	...^{S}	-	120	...^{S}	-	120
Tube plate with drain flange	...^{S}	-	120	...^{S}	-	120	...^{S}	-	120	...^{S}	-	120	...^{S}	-	120
Tube plate with drain ball valve G..	...^{S}	180	55	...^{S}	180	55	...^{S}	180	55	-	-	-	-	-	-
Tube plate with drain needle valve G..	...^{S}	120	50	...^{S}	120	50	...^{S}	120	50	-	-	-	-	-	-
Flanged connection	...^{S}	-	30	...^{S}	-	30	-	-	-	-	-	-	-	-	-
Flanged connection with drain plug G1/2“	...^{S}	-	35	...^{S}	-	35	-	-	-	-	-	-	-	-	-
Flanged connection with drain plug NPT1/2“	...^{S}	-	65	...^{S}	-	65	-	-	-	-	-	-	-	-	-
Flanged connection with drain welding stub end	...^{S}	-	120	...^{S}	-	120	-	-	-	-	-	-	-	-	-
Flanged connection with drain flange	...^{S}	-	120	...^{S}	-	120	-	-	-	-	-	-	-	-	-
Flanged connection with drain ball valve G..	...^{S}	180	55	...^{S}	180	55	-	-	-	-	-	-	-	-	-
Flanged connection with drain needle valve G..	...^{S}	120	50	...^{S}	120	50	-	-	-	-	-	-	-	-	-
Flanged connection EN/ANSI	...^{S}	-	35	...^{S}	-	35	...^{S}	-	50	...^{S}	-	100	...^{S}	-	115
Flanged connection EN/ANSI with drain plug G1/2“	...^{S}	-	35	...^{S}	-	35	...^{S}	-	50	...^{S}	-	-	...^{S}	-	-
Flanged connection EN/ANSI with drain plug NPT1/2“	...^{S}	-	65	...^{S}	-	65	...^{S}	-	70	...^{S}	-	100	...^{S}	-	115
Flanged connection EN/ANSI with drain welding stub end	...^{S}	-	120	...^{S}	-	120	...^{S}	-	120	...^{S}	-	120	...^{S}	-	120
Flanged connection EN/ANSI with drain flange	...^{S}	-	120	...^{S}	-	120	...^{S}	-	160	...^{S}	-	200	...^{S}	-	200
Flanged connection EN/ANSI with drain ball valve G..	...^{S}	200	55	...^{S}	200	55	...^{S}	200	55	-	-	-	-	-	-
Flanged connection EN/ANSI with drain needle valve G..	...^{S}	120	50	...^{S}	120	50	...^{S}	120	50	-	-	-	-	-	-
Flanged connection EN/ANSI with drain needle valve NPT..	...^{S}	120	50	...^{S}	120	50	...^{S}	120	50	...^{S}	200	55	...^{S}	200	55

The bypass level indicator are based on a modular design and can be arranged individually.
Type key page 236 - 241

...^{S} = Depending on the Float length

Process connection

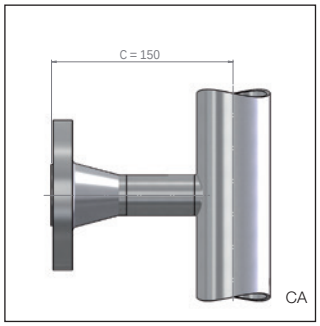

Welding neck flange (Standard)

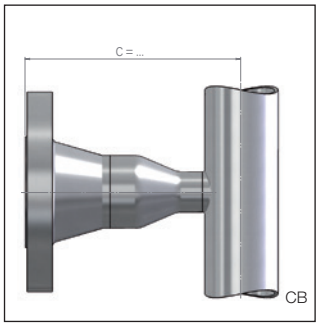

Welding neck flange reduced

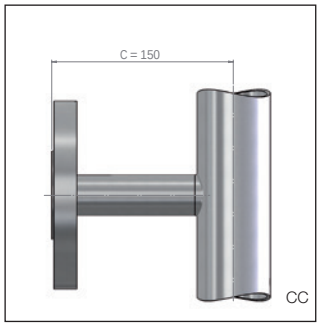

Blind flange

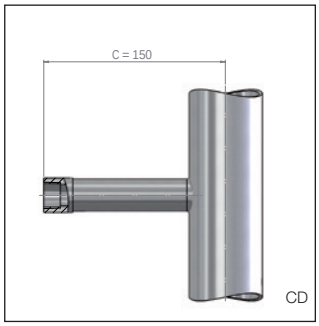

Female thread

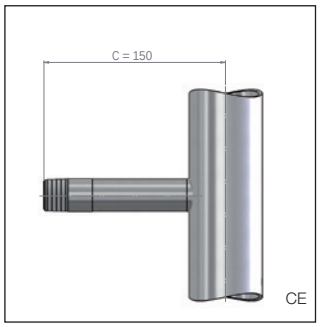

Male thread

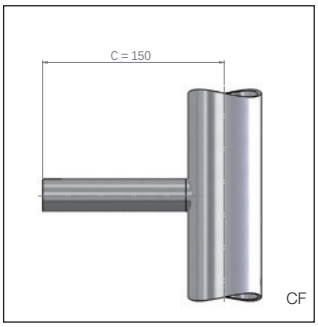

Welding stub end

Welding neck flange reduced DN50 to DN25 / 2“ to 1“

Pressure rating	16 / 150#	40 / 300#	63 / 600#	160 / 1500#	250-400 / 2500#
Standrohraussendurchmesser [mm]	C [mm]	C [mm]	C [mm]	C [mm]	C [mm]
Ø 60.30	154 / 172	156 / 179	170 / 188	-	-
Ø 63.50	155 / 174	158 / 180	172 / 190	-	-
Ø 73.03	160 / 179	163 / 185	177 / 195	190 / 223	225 / 248
Ø 88.90	168 / 186	171 / 193	185 / 203	198 / 231	233 / 256
Ø 114.30	181 / 199	184 / 206	198 / 215	211 / 244	246 / 269

Material quality / Process connection

	Welding neck flange	Welding neck flange reduced	Blind flange	Female thread	Male thread	Welding stub end
Stainless steel	■	■	■	■	■	■
Titanium	■	■	■	■	■	■
Alloy	■	■	■	■	■	■
PVC	-	-	■	-	-	-
PP	-	-	■	-	-	-
PVDF	-	-	■	-	-	-
E-CTFE coated	■	■	■	-	-	-
PFA coated	■	■	■	-	-	-
redundantes System	■	■	■	■	■	■
Bezugsgefäss	■	■	■	■	■	■

The bypass level indicator are based on a modular design and can be arranged individually.
Type key page 236 - 241

Heinrich Kübler AG
Ruessenstrasse 4 | CH-6340 Baar | Phone +41 (0)41 766 62 62 | Fax +41 (0)41 766 62 63 | E-Mail info@kubler.ch | Internet www.kubler.ch

Dampening spring

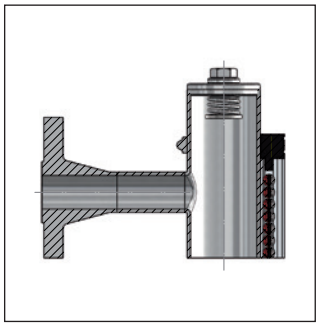

Dampening spring top

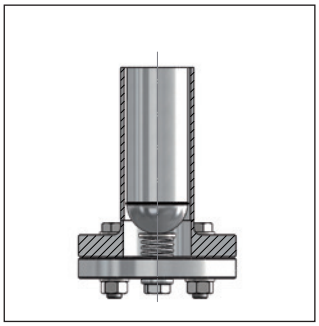

Dampening spring bottom

Support bracket

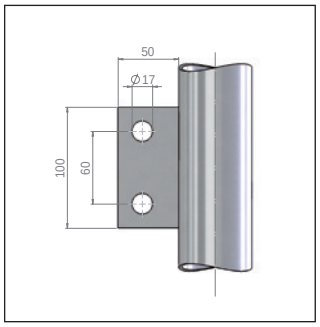

Support bracket HE-4824
(recommended for M ≥ 2000 mm)

The bypass level indicator are based on a modular design and can be arranged individually.
Type key page 236 - 241

Continuous display and monitoring of fluid levels

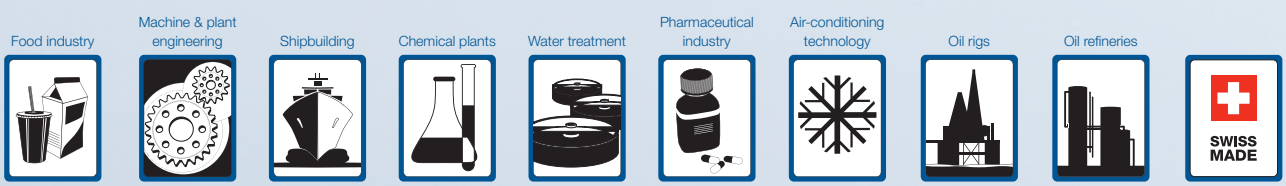

1015-MINI

BYPASS LEVEL INDICATOR-MINI

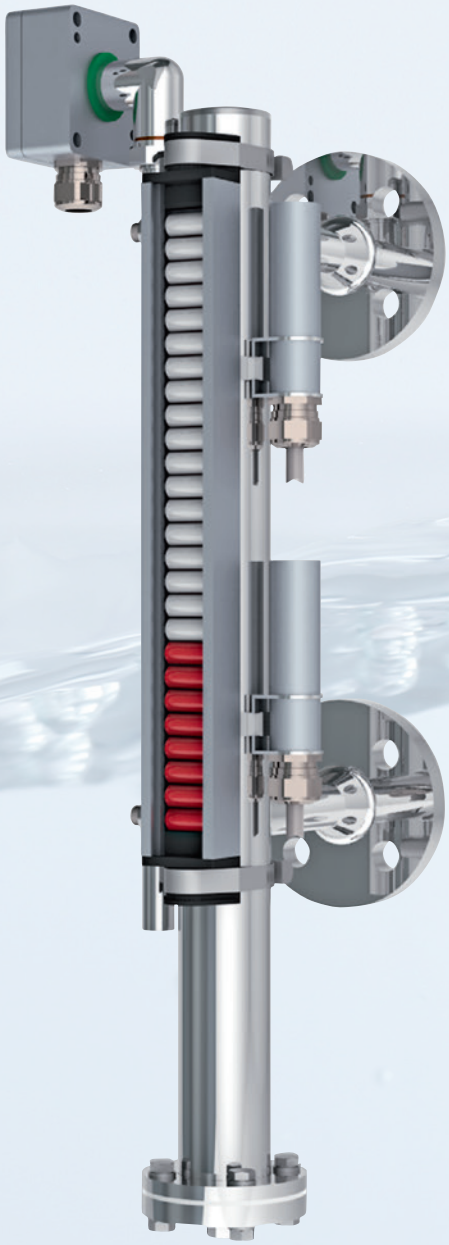

Table of content

Bypass Level Indicator-Mini / Content 300
Bypass Level Indicator-Mini / Functional description 301
Bypass Level Indicator-Mini / Type key 302
Bypass Level Indicator-Mini / Type key 303
Bypass Level Indicator-Mini / Type key 304
Bypass Level Indicator-Mini / Type key 305
Bypass Level Indicator-Mini / Stainless steel PN 6 306
Bypass Level Indicator-Mini / Stainless steel PN 6 307
Bypass Level Indicator-Mini / Cylindrical float PN 6 308
Bypass Level Indicator-Mini / Cylindrical float PN 6 309
Bypass Level Indicator-Mini / Magnetic roller indicator 310
Bypass Level Indicator-Mini / Scale 311
Bypass Level Indicator-Mini / Level transmitter 312
Bypass Level Indicator-Mini / Level transmitter 313
Bypass Level Indicator-Mini / Level transmitter 314
Bypass Level Indicator-Mini / Level transmitter 315
Bypass Level Indicator-Mini / Level transmitter 316
Bypass Level Indicator-Mini / Level transmitter 317
Bypass Level Indicator-Mini / Magnetic switch 318
Bypass Level Indicator-Mini / Magnetic switch 319
Bypass Level Indicator-Mini / Magnetic switch 320
Bypass Level Indicator-Mini / Magnetic switch 321
Bypass Level Indicator-Mini / Isolation / Heat tracing 322
Bypass Level Indicator-Mini / Isolation 323
Bypass Level Indicator-Mini / Chamber end top 324
Bypass Level Indicator-Mini / Chamber end top 325
Bypass Level Indicator-Mini / Chamber end bottom 326
Bypass Level Indicator-Mini / Process connection / Support bracket 327
Bypass Level Indicator-Mini / Chamber end bottom 327

Heinrich Kübler AG
Ruessenstrasse 4 | CH-6340 Baar | Phone +41 (0)41 766 62 62 | Fax +41 (0)41 766 62 63 | E-Mail info@kubler.ch | Internet www.kubler.ch

Functional description

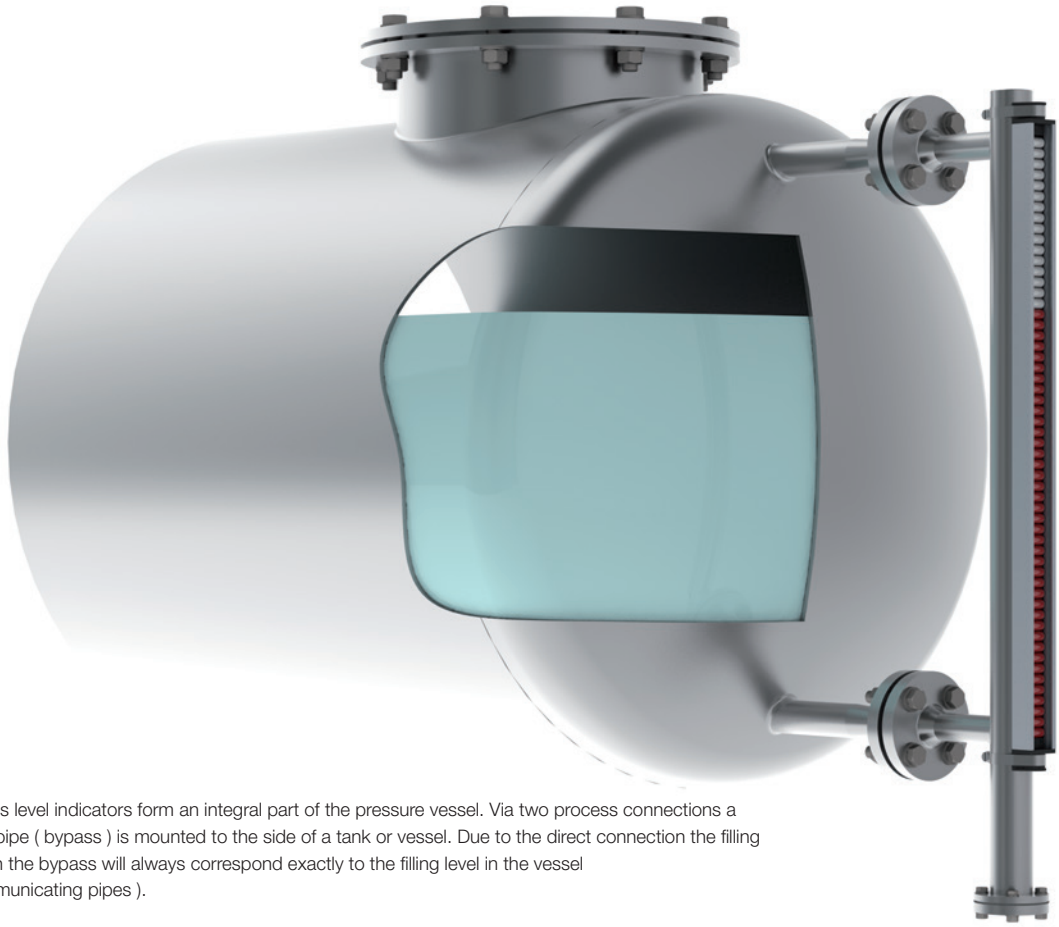

Bypass level indicators form an integral part of the pressure vessel. Via two process connections a standpipe (bypass) is mounted to the side of a tank or vessel. Due to the direct connection the filling level in the bypass will always correspond exactly to the filling level in the vessel (communicating pipes).

In the bypassing pipe a cylindrical float with a built-in magnetic system is contained. The concentrated magnetic field of the permanent magnet corresponds exactly to the filling level of the liquid in the bypass.
In a contactless way the magnetic field transmits itself through the wall of the standpipe onto externally mounted displaying, recording and switching elements.

Design limits

Specific gravity:	≥ 560 kg/m³
Design pressure:	-1 bar ... 6 bar
Design temperature:	-40°C ... 150°C

Code 1

	Key 1 ... - **Version**
BNA[1]	Bypass level indicator
BMG[1]	Bypass level indicator with level transmitter

Code 2

	Key 1 (for process connection flange) ... - **Flange connection**		Key 1 (for process connection other) ... - **Other process connection**
FE[1]	Flange according to EN	GM[1]	Female thread G
FA[1]	Flange according to ANSI	NPTM[1]	Female thread NPT
F[1]	Flange according to …	GN[1]	Male thread G
FS[1]	Flange according to drawing	NPTN[1]	Male thread NPT
		SE[1]	Welding stub end
		OS[1]	Without process side connections (Code 3 not applicable)

Code 3

	Key 1.1 (only for flange) ... / … / … - **Flange connection**		Key 1.2 (only for flange) … / ... / … - **Flange connection**		Key 1.3 (only for flange) … / … / ... - **Flange connection**
…	Flange nominal bore	…	Flange pressure rating	…	Flange facing

Code 3

	Key 1 (for process connection other) ... - **Size**
…	Threaded connection size
…	Welding stub end size

Example

Code	**1**		**2**		**3**						**4**														**5**		**6**		**7**					
Key	1	-	1	-	1.1	/	1.2	/	1.3	-	1	/	2	/	3	/	4	/	5	/	6	/	7	/	8	-	1	-	1	-	1	/	2	/	3	-
Example	BMG	-	FE	-	25	/	16	/	B1	-	ALF	/	TP43B	/	V	/	K15	/							EXIAG	-	DU	-	M…	-	V	/	40	/	2	-

Black = not possible according to Atex / Blue = possible according to Atex Exia / Blue[1] = possible according to Atex Exia and Exd / Black[1] = possible according to Atex Exd

Heinrich Kübler AG
Ruessenstrasse 4 | CH-6340 Baar | Phone +41 (0)41 766 62 62 | Fax +41 (0)41 766 62 63 | E-Mail info@kubler.ch | Internet www.kubler.ch

Code 4

	Key 1 ... / ... / ... / ... / ... / ... / ... / ... - **Electrical connection level transmitter**		Key 2 ... / ... / ... / ... / ... / ... / ... / ... - **Control unit**		Key 3 ... / ... / ... / ... / ... / ... / ... / ... - **Level transmitter tube material quality**
ALE	Aluminium terminal box 64 x 58 x 34 mm (only without control unit)	TP43A[1]	TP5343A	V[1]	Stainless steel
ALF	Aluminium terminal box 80 x 75 x 57 mm	TP43B[1]	TP5343B Ex		
ALDA[1]	Aluminium terminal box Ø 95 x 84 mm	TD35A[1]	TD5335A		
AVA	Stainless steel terminal box Ø 82 x 110 mm	TD35B[1]	TD5335D Ex		
AVDA[1]	Stainless steel terminal box Ø 82 x 110 mm	TP50AP[1]	TP5350AP / PROFIBUS® PA		
AVM	Stainless steel terminal box Ø 50 x 117 mm	TP50BP[1]	TP5350BP Ex / PROFIBUS® PA		
AVDM[1]	Stainless steel terminal box Ø 169 x 117 mm	TP50AF[1]	TP5350AF / FOUNDATION™ Fieldbus		
DAAVDM[1]	Stainless steel terminal box with LED display Ø 169 x 117 mm	TP50BF[1]	TP5350BF Ex / FOUNDATION™ Fieldbus		
APA	Polyester terminal box 80 x 75 x 55 mm	TMT181A[1]	TMT181		
APB	Polyester terminal box 80 x 75 x 55 mm / Exm	TMT181B[1]	TMT181 Ex		
ABA	ABS terminal box 80 x 82 x 55 mm	ZMU[1]	XT42SI Ex		
K	Connection cable	TAMX[1]	Other control unit		
K68	Connection cable IP 68 (≥ G 3/8“)	MST[1]	Magnetostrictive / 4 ... 20 mA		
DAALA	Aluminium terminal box with LED display Ø 82 x 100 mm	MSTB[1]	Magnetostrictive / 4 ... 20 mA / Ex		
DAAVDA[1]	Stainless steel terminal box with LED display Ø 82 x 100 mm	MSTH[1]	Magnetostrictive / HART®-Protocol		
		MSTHB[1]	Magnetostrictive / HART®-Protocol / Ex		

Code 4

	Key 4 ... / ... / ... / ... / ... / ... / ... / ... - **Accuracy**		Key 5 (only for connection cable) ... / ... / ... / ... / ... / ... / ... / ... - **Length of cable**		Key 6 (only for connection cable) ... / ... /... / ... / ... / ... / ... / ... - **Connection cable**
K5[1]	Accuracy 5 mm / -30 ... 130°C	...	Length of cable in meter	PVC[1]	PVC connection cable
K5HTF[1]	Accuracy 5 mm / -40 ... 200°C			PVCB[1]	PVC connection cable with blue coating
K5HT[1]	Accuracy 5 mm / -40 ... 250°C			SIL[1]	Silicone connection cable
K10[1]	Accuracy 10 mm / -30 ... 130°C			PUR[1]	PUR connection cable
K10HTF[1]	Accuracy 10 mm / -40 ... 200°C			RAD[1]	Radox connection cable
K10HT[1]	Accuracy 10 mm / -40 ... 250°C				
K15[1]	Accuracy 15 mm / -30 ... 130°C				
K15HTF[1]	Accuracy 15 mm / -40 ... 200°C				
K15HT[1]	Accuracy 15 mm / -40 ... 250°C				
K1[1]	Accuracy 0.2 mm / -40 ... 125°C				
K1HT[1]	Accuracy 0.2 mm / -40 ... 250°C				

Code 4

	Key 7 (only for connection cable) ... / ... / ... / ... / ... / ... / ... / ... - **Connection cable option**		Key 8 ... / ... / ... / ... / ... / ... / ... / ... - **Approvals level transmitter**
KA[1]	Shielded	EXIAG	Acc. to Exia, atmosphere gas
KB[1]	Shielded / oil-resistant	EXIAGD	Acc. to Exia, atmosphere gas and dust
KC[1]	Shielded / oil-resistant / halogen-free	EXDG[1]	Acc. to Exd, atmosphere gas
KD[1]	Oil-resistant	EXDGD[1]	Acc. to Exd, atmosphere gas and dust
KE[1]	Oil-resistant / halogen-free	EXIADG[1]	Acc. to Exia and Exd, atmosphere gas
KF[1]	Halogen-free	EXIADGD[1]	Acc. to Exia and Exd, atmosphere gas and dust

Example

8			9							10		11		12			Code
1	2	3	1	2	3	4	5	6	7	1	2	1	2	1	2	3	**Key**
MNB	SA1		3	RU40	N	1	PVCB	KA	EXIAG	ZVS	200			EX	PEDII		**Example**

Black = not possible according to Atex / Blue = possible according to Atex Exia / Blue[1] = possible according to Atex Exia and Exd / Black[1] = possible according to Atex Exd

1015 -mini

Code 5

	Key 1 ... - **Electrical connection position of the level transmitter**
DO[1]	Electrical connection top mounted
DU[1]	Electrical connection bottom mounted

Code 6

	Key 1 ... - **Centre distance / Length of instrument**
M...[1]	Centre distance in mm
L...[1]	Length of instrument in mm (only for Instrument without process side connections)

Code 7

	Key 1 ... / ... / ... - **Bypass chamber material quality**		Key 2 ... / ... / ... - **Bypass chamber outside diameter**		Key 3 ... / ... / ... - **Bypass chamber wall thickness**
V[1]	Stainless steel (V4A)	40[1]	Ø 40.00 mm	2.00[1]	Bypass chamber wall thickness in mm

Code 8

	Key 1 ... / ... / ... - **Magnetic roller indicator**		Key 2 ... / ... / ... - **Scale**		Key 3 ... / ... / ... - **Mag. roller indicator sight extension**
MNA	Magnetic roller indicator MNA	SAK	Scale in Aluminium with adhesive foil	PV[1]	Acryl glass extension
MNB[1]	Magnetic roller indicator MNB (Ex)	SA0[1]	Scale in Aluminium without engraving		
MNAN	Mag. roller indicator MNAN over-roll-protected	SA1[1]	Scale in Aluminium with engraving in %		
MNBN[1]	Mag. roller indicator MNBN over-roll-prot. (Ex)	SA2[1]	Scale in Aluminium with engraving in cm		
MNAV	Magnetic roller indicator MNAV	SA3[1]	Scale in Aluminium with engraving in inch.		
MNBV[1]	Magnetic roller indicator MNBV (Ex)	SA4[1]	Scale in Aluminium with engraving acc. to customized table		
MNAVN	Magnetic roller indicator MNAVN over-roll-prot.	SV0[1]	Scale in Stainless steel without engraving		
MNBVN[1]	Mag. roller indicator MNBVN over-roll-prot. (Ex)	SV1[1]	Scale in Stainless steel with engraving in %		
		SV2[1]	Scale in Stainless steel with engraving in cm		
		SV3[1]	Scale in Stainless steel with engraving in inch.		
		SV4[1]	Scale in Stainless steel with engraving acc. to customized table		

Code 9

	Key 1 ... / ... / ... / ... / ... / ... / ... / ... - **Number of magnetic switches**		Key 2 ... / ... / ... / ... / ... / ... / ... / ... - **Magnetic switch**		Key 3 ... / ... / ... / ... / ... / ... / ... / ... - **Magnetic switch option**
...	Number of magnetic switches	RU40	Magnetic switch RU40	R22[1]	Switch protective circuit with 22 ohm / 0.21 W resistor
		RUD40	Magnetic switch RUD40		
		RUV40	Magnetic switch RUV40	N[1]	Switch protective circuit according to NAMUR EN 60947
		RUVD40	Magnetic switch RUVD40		
		ALERU40	Magnetic switch ALERU40		
		ALFRU40	Magnetic switch ALFRU40		

Example

Code	**1**		**2**		**3**						**4**														**5**		**6**				**7**				
Key	1	-	1	-	1.1	/	1.2	/	1.3	-	1	/	2	/	3	/	4	/	5	/	6	/	7	/	8	-	1	-	1	-	1	/	2	/	3	-
Example	BMG	-	FE	-	25	/	16	/	B1	-	ALF	/	TP43B	/	V	/	K15	/							EXIAG	-	DU	-	M...	-	V	/	40	/	2	-

Black = not possible according to Atex / Blue = possible according to Atex Exia / Blue[1] = possible according to Atex Exia and Exd / Black[1] = possible according to Atex Exd

Heinrich Kübler AG
Ruessenstrasse 4 | CH-6340 Baar | Phone +41 (0)41 766 62 62 | Fax +41 (0)41 766 62 63 | E-Mail info@kubler.ch | Internet www.kubler.ch

Code 9

	Key 4 … / … / … / … / … / … / … - **Length of cable**		Key 5 … / … / … / … / … / … / … - **Connection cable**		Key 6 … / … / … / … / … / … / … - **Connection cable option**
…	Length of cable in meter	PVC[1]	PVC connection cable	KA[1]	Shielded
		PVCB[1]	PVC connection cable with blue coating	KB[1]	Shielded / oil-resistant
		SIL[1]	Silicone connection cable	KC[1]	Shielded / oil-resistant / halogen-free
		PUR[1]	PUR connection cable	KD[1]	Oil-resistant
		RAD[1]	Radox connection cable	KE[1]	Oil-resistant / halogen-free
				KF[1]	Halogen-free

Code 9

	Key 7 … / … / … / … / … / … / … - **Approvals magnetic switch**
EXIAG	Acc. to Exia, atmosphere gas
EXIAGD	Acc. to Exia, atmosphere gas and dust
EXDG[1]	Acc. to Exd, atmosphere gas
EXDGD[1]	Acc. to Exd, atmosphere gas and dust
EXIADG[1]	Acc. to Exia and Exd, atmosphere gas
EXIADGD[1]	Acc. to Exia and Exd, atmosphere gas and dust

Code 10

	Key 1 … / … - **Float**		Key 2 … / … - **Float length**
ZVS[1]	Float in Stainless steel	…	Acc. to float table on page 308
ZBS[1]	Float in Buna		

Code 11

	Key 1 … / … - **Instrument isolation**		Key 2 … / … - **Electrical heat tracing**
AIT	Armaflex isolation AIT	H75A	Electrical heat tracing 75°C
AHT	Armaflex isolation AHT	H75B	Electrical heat tracing 75°C acc. to EExe
SW	Rock-wool isolation	H150A	Electrical heat tracing 150°C
		H150B	Electrical heat tracing 150°C acc. to EExe

Code 12

	Key 1 … / … / … - **Approvals / 1**		Key 2 … / … / … - **Approvals / 2**		Key 3 … / … / … - **Approvals / 3**
EX	Acc. to Ex	PEDII[1]	Acc. to PED97/23/EC category II	ABS[1]	Approval American Bureau of Shipping
		PEDIV[1]	Acc. to PED97/23/EC category IV	BV[1]	Approval Bureau Veritas
				GL[1]	Approval Germanischer Lloyd
				LR[1]	Approval Lloyd's Register
				EAC3[1]	Approval EAC TR CU 004/2011 & 012/2011 & 020/2011 & 032/2013

Example

8			**9**							**10**		**11**		**12**			**Code**
1	2	3	1	2	3	4	5	6	7	1	2	1	2	1	2	3	**Key**
MNB	SA1		3	RU40	N	1	PVCB	KA	EXIAG	ZVS	200			EX	PEDII		**Example**

Black = not possible according to Atex / Blue = possible according to Atex Exia / Blue[1] = possible according to Atex Exia and Exd / Black[1] = possible according to Atex Exd

1015 -mini

Type **BNA-..-../../..-M..-V/40/2-MN..-Z..S/..**

Material quality:	1.4404 / 1.4435 / 1.4571 (316L / 316Ti)
Centre distance M / Length of instrument L:	150 ... 5000 mm**
Specific gravity:	≥ 560 kg/m³
Design pressure:	-1 bar ... 6 bar
Design temperature:	-40°C ... 150°C

Design

Chamber:	Ø 40.00 x 2.00 mm
Process connection:	Type key page 302
Chamber end top:	Page 324 - 325
Chamber end bottom:	Page 326 - 327
Float:	Page 308

Option magnetic roller indicator / Page 310

Aluminium or Stainless steel / Pocan	-40°C ... 200°C

Option scale / Page 311

Aluminium / Stainless steel	With adhesive foil / Engraving / Blank

Option magnetic switch / Page 318 - 321

Aluminium / Stainless steel	-40°C ... 150°C

Option level transmitter / Page 312 - 316

Accuracy / Reed contacts:	5 / 10 / 15 mm
Accuracy / Magnetostrictive:	0.2 mm
Control unit:	- Programmable - Hart-programmable / SIL2 - Profibus PA - Foundation Fieldbus

Option electrical heat tracing / Page 322

Holding temperature:	~10°C / Frost protection

Option instrument isolation / Page 322 - 323

Isolation:	Armaflex isolation / Rock-wool isolation

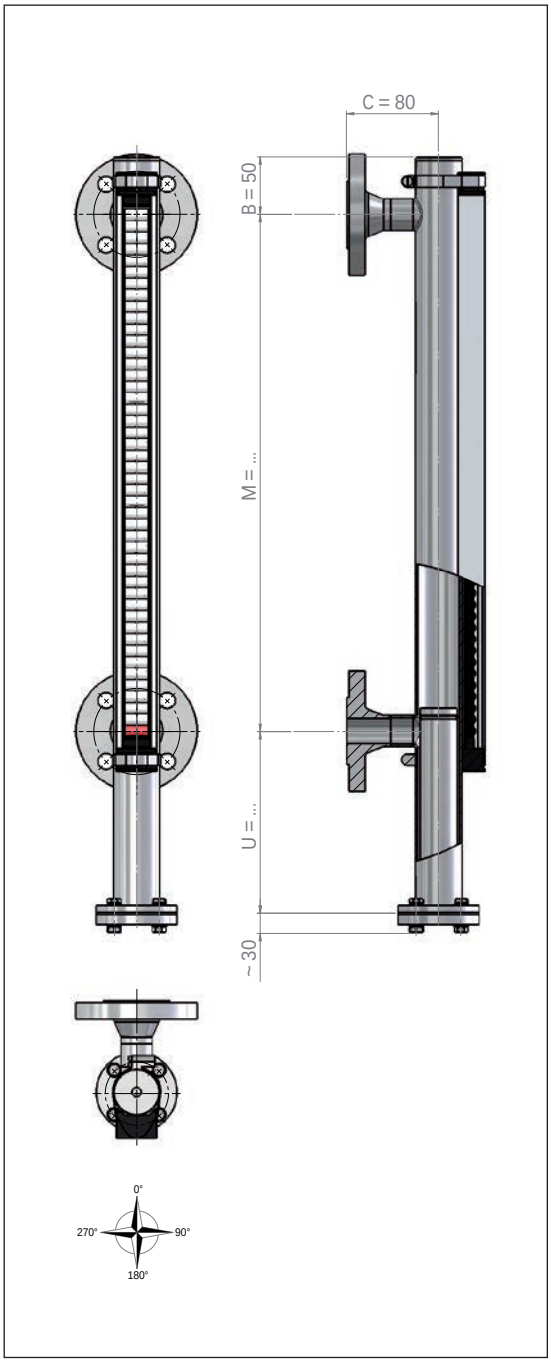

Approvals / Certificates

ATEX*

II 1/2G c IIC T6 - T1 II 2D c IIC T6 - T1

Liquid temperature Ex max. 150°C

The bypass level indicator-mini are based on a modular design and can be arranged individually.
Type key page 302 - 305

* The approval is dependent on the equipment combination

** Depends on the approval

Heinrich Kübler AG
Ruessenstrasse 4 | CH-6340 Baar | Phone +41 (0)41 766 62 62 | Fax +41 (0)41 766 62 63 | E-Mail info@kubler.ch | Internet www.kubler.ch

Type **BNA-OS-L..-V40/2-MN..-Z.S..**

Material quality:	1.4404 / 1.4435 / 1.4571 (316L / 316Ti)
Centre distance M / Length of instrument L:	150 ... 5000 mm**
Specific gravity:	≥ 560 kg/m³
Design pressure:	-1 bar ... 6 bar
Design temperature:	-40°C ... 150°C

Design

Chamber:	Ø 40.00 x 2.00 mm
Process connection:	Type key page 302
Chamber end top:	Page 324 - 325
Chamber end bottom:	Page 326 - 327
Float:	Page 308

Option magnetic roller indicator / Page 310

Aluminium or Stainless steel / Pocan	-40°C ... 200°C

Option scale / Page 311

Aluminium / Stainless steel	With adhesive foil / Engraving / Blank

Option magnetic switch / Page 318 - 321

Aluminium / Stainless steel	-40°C ... 150°C

Option level transmitter / Page 312 - 316

Accuracy / Reed contacts:	5 / 10 / 15 mm
Accuracy / Magnetostrictive:	0.2 mm
Control unit:	- Programmable - Hart-programmable / SIL2 - Profibus PA - Foundation Fieldbus

Option electrical heat tracing / Page 322

Holding temperature:	~10°C / Frost protection

Option instrument isolation / Page 322 - 323

Isolation:	Armaflex isolation / Rock-wool isolation

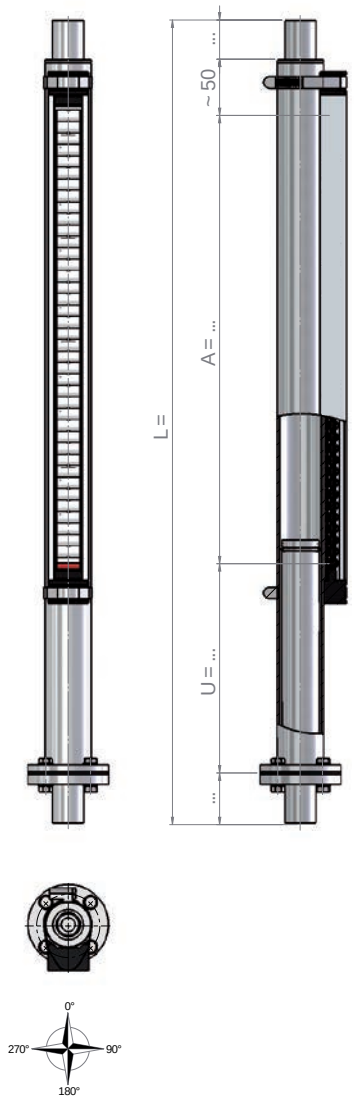

Approvals / Certificates

ATEX*

II 1/2G c IIC T6 - T1 II 2D c IIC T6 - T1

Liquid temperature Ex max. 150°C

The bypass level indicator-mini are based on a modular design and can be arranged individually.
Type key page 302 - 305

* The approval is dependent on the equipment combination

** Depends on the approval

Cylindrical float PN 6 **Stainless steel 1.4571**

Float:	ZVS34/../6/B64
Diameter [mm]:	34
Design temperature [°C]:	-40 ... 150
Design pressure [bar]:	-1 ... 6

Distance U (see bypass level indicator figure)

Distance U with float stop:	Float length - 20 mm
Distance U with dampening spring:	Float length - 10 mm

Float ZVS34/../6/B64										
Length [mm]	**180**	**200**	**230**	**250**	**280**	**300**	**340**	**420**	**480**	**580**
Weight [g]	127	135	148	156	168	177	194	227	252	294

Float height above liquid [mm]	Specific gravity of the liquid [kg/m³]									
0	0	-	-	-	-	-	-	-	-	-
10	10	940	900	850	820	790	770	740	690	670	650
20	**20**	**1000**	**950**	**900**	**850**	**820**	**800**	**760**	**710**	**690**	**660**
30	30	1070	1000	940	890	850	830	790	730	710	670
40	40	1140	1070	990	940	890	860	820	750	720	680
50	50	1230	1140	1040	990	920	900	840	770	740	700
60	60	1340	1220	1100	1030	960	930	870	790	760	710
70	70	1460	1320	1170	1090	1010	970	900	820	770	720
80	80	1600	1430	1250	1150	1060	1010	940	840	790	740
90	90	1780	1550	1340	1230	1110	1060	980	860	810	750
100	100	2000	1710	1440	1310	1180	1110	1020	890	830	770

Cylindrical float PN 6 **Buna**

Float:	ZBS35/../6/M1
Diameter [mm]:	35
Design temperature [°C]:	-20 ... 80
Design pressure [bar]:	-1 ... 6

Distance U (see bypass level indicator figure)

Distance U with float stop:	Float length - 20 mm
Distance U with dampening spring:	Float length - 10 mm

Float ZBS35/../6/M1										
Length [mm]	**90**	**100**	**105**	**115**	**120**	**135**	**150**	**170**	**195**	**225**
Weight [g]	73	76	77	80	81	85	89	96	103	110

Float height above liquid [mm]	Specific gravity of the liquid [kg/m³]									
0	0	-	-	-	-	-	-	-	-	-	-
5	5	-	-	-	-	-	-	-	-	-	-
10	10	950	850	840	790	770	710	660	620	580	530
15	15	1000	950	900	850	800	750	700	650	600	550
20	**20**	**1080**	**990**	**940**	**870**	**840**	**770**	**710**	**670**	**610**	**560**
25	25	1170	1050	1000	920	890	800	740	690	630	570
30	30	1260	1130	1070	980	940	840	770	710	650	590
35	35	1380	1220	1140	1040	990	880	800	740	670	600
40	40	1520	1320	1230	1160	1050	930	840	770	690	620
45	45	1690	1440	1330	1190	1120	980	880	800	710	640
50	50	1900	1580	1460	1280	1200	1040	930	830	740	650

The bypass level indicator-mini are based on a modular design and can be arranged individually.
Type key page 302 - 305

20 ~ Position of the magnetic system

Heinrich Kübler AG
Ruessenstrasse 4 | CH-6340 Baar | Phone +41 (0)41 766 62 62 | Fax +41 (0)41 766 62 63 | E-Mail info@kubler.ch | Internet www.kubler.ch

Notes

The bypass level indicator-mini are based on a modular design and can be arranged individually.
Type key page 302 - 305

50 - = Position of the magnetic system

Type	**MNA / MNB** **MNAN / MNBN**
Housing:	Aluminium anodized
Ingress protection class:	IP 67

MNA / MNB / MNAN / MNBN

Indication

- Material quality / Diameter:	Pocan / Ø 10 mm
- Colour:	White / Red
End part:	Ryton, black
Sight cover - MNA / MNAN:	Macrolon
- MNB / MNBN:	Glass
Ambient temperature:	-40°C ... 200°C
MNAN / MNBN (over-roll-protected):	Roller rotation max. 180°

Approvals / Certificates

ABS / ATEX / BV / EAC / GL / LR

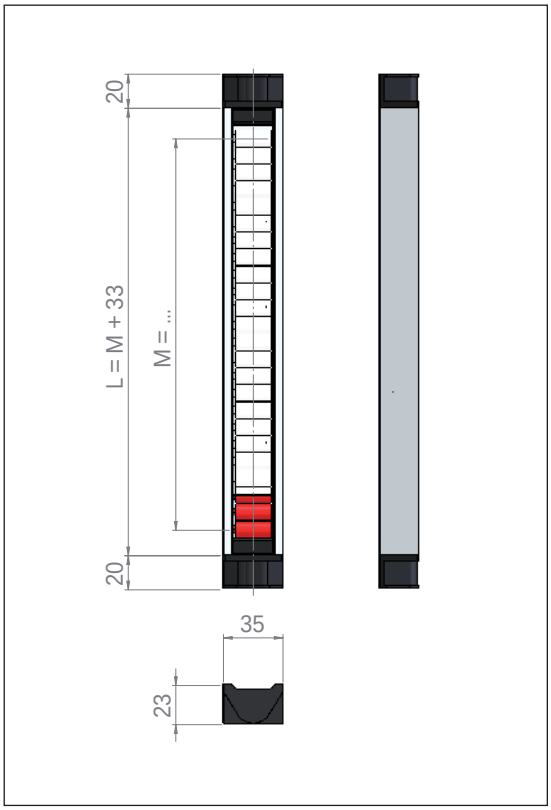

Type	**MNAV / MNBV** **MNAVN / MNBVN**
Housing:	Aluminium with Stainless steel covered
Ingress protection class:	IP 67

MNAV / MNBV / MNAVN / MNBVN

Indication

- Material quality / Diameter:	Pocan / Ø 10 mm
- Colour:	White / Red
End part:	Ryton, black
Sight cover - MNAV / MNAVN:	Macrolon
- MNBV / MNBVN:	Glass
Ambient temperature:	-40°C ... 200°C
MNAVN / MNBVN (over-roll-protected):	Roller rotation max. 180°

Approvals / Certificates

ABS / ATEX / BV / EAC / GL / LR

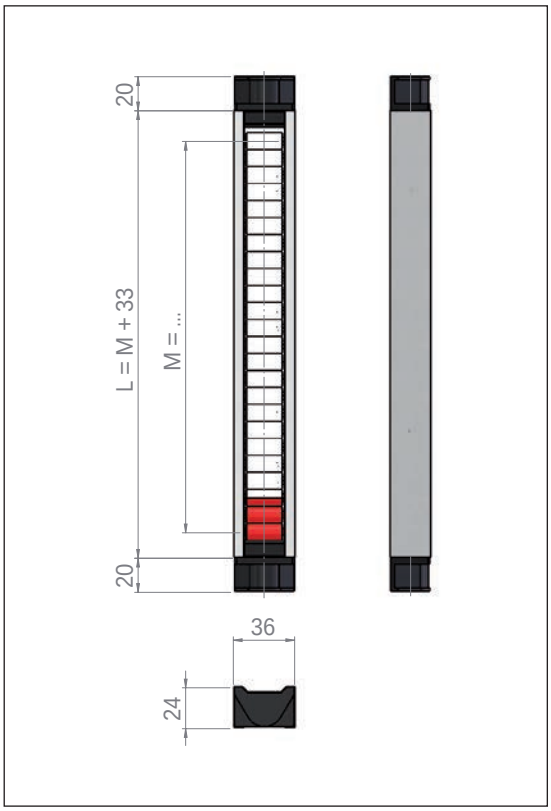

The bypass level indicator-mini are based on a modular design and can be arranged individually.
Type key page 302 - 305

Heinrich Kübler AG
Ruessenstrasse 4 | CH-6340 Baar | Phone +41 (0)41 766 62 62 | Fax +41 (0)41 766 62 63 | E-Mail info@kubler.ch | Internet www.kubler.ch

Type	SAK / SA.. / SV..

SAK

Scale:	Adhesive foil (black)
Angle profile:	Aluminium
Scaling:	in cm (0 cm .. 10 cm .. 20 cm .. 30 cm ..)
Width:	40 mm
Ambient temperature:	-40°C ... 200°C

SA0 / SA1 / SA2 / SA3 / SA4

Scale:	Engraved
Angle profile:	Aluminium
Scaling:	Blank / % / cm / inch. / ..
Width:	40 mm
Ambient temperature:	-40°C ... 200°C

SV0 / SV1 / SV2 / SV3 / SV4

Scale:	Engraved
Angle profile:	Stainless steel
Scaling:	Blank / % / cm / inch. / ..
Width:	40 mm
Ambient temperature:	-40°C ... 400°C

Approvals / Certificates

ABS / ATEX / BV / EAC / GL / LR

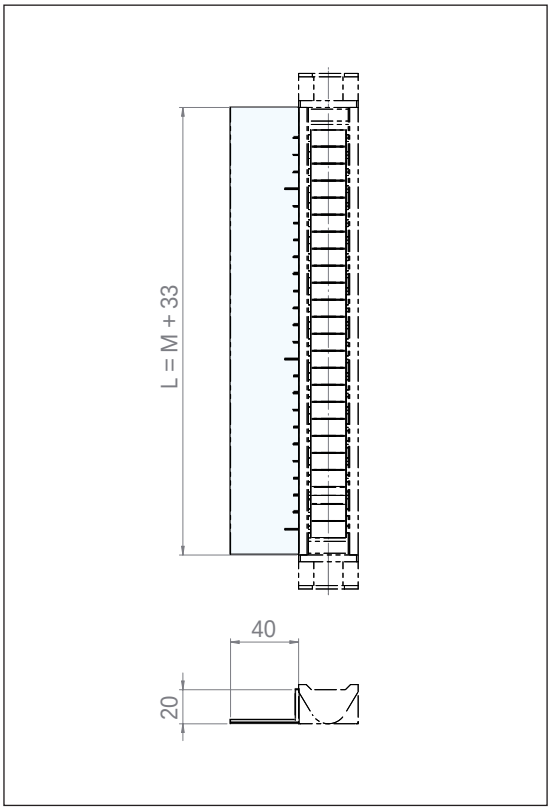

Type	Magnetic roller indicator sight extension PV
Material quality:	Acryl glass
Width:	35 mm
Depth:	67 mm
Ambient temperature:	-40°C ... 100°C
Mounting:	on magnetic roller indicator

Approvals / Certificates

ABS / ATEX / BV / EAC / GL / LR

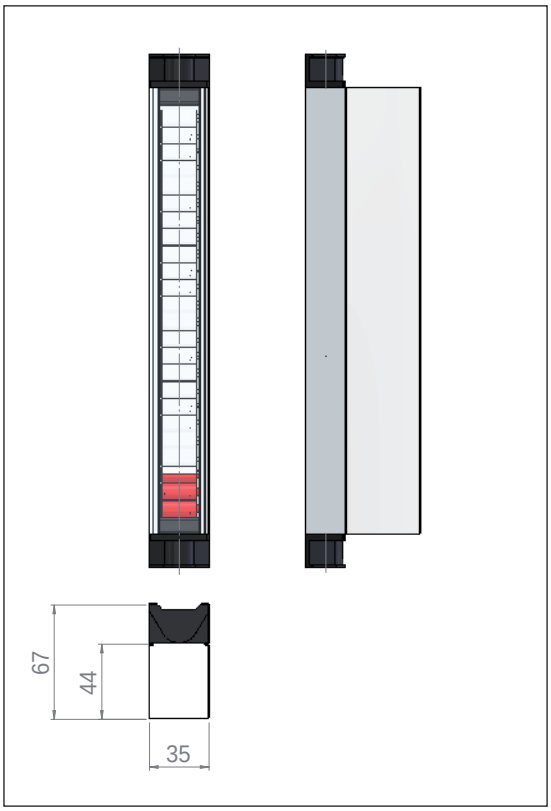

The bypass level indicator-mini are based on a modular design and can be arranged individually.
Type key page 302 - 305

Connection diagram

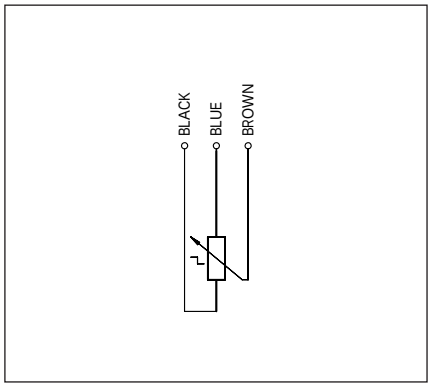

without Control unit

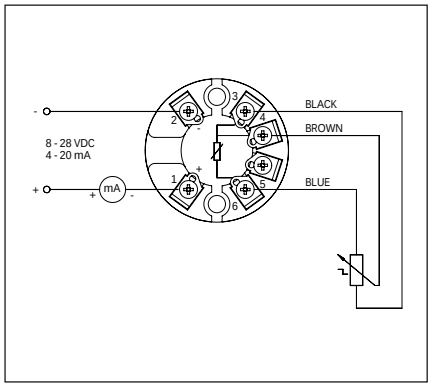

Control unit TP5343..

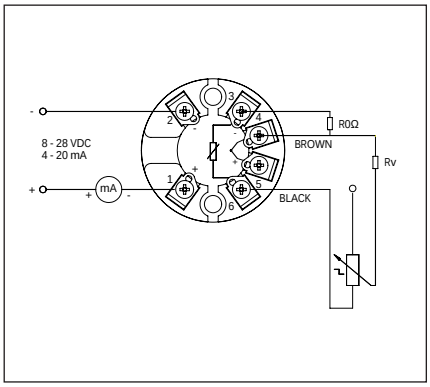

Control unit TD5335..

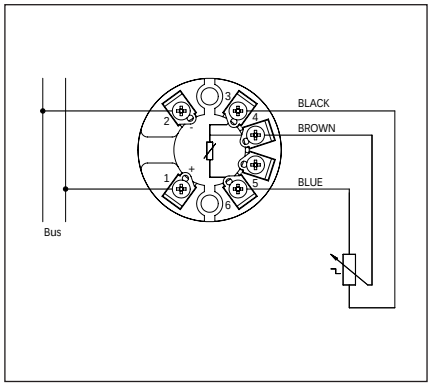

Control unit TP5350..

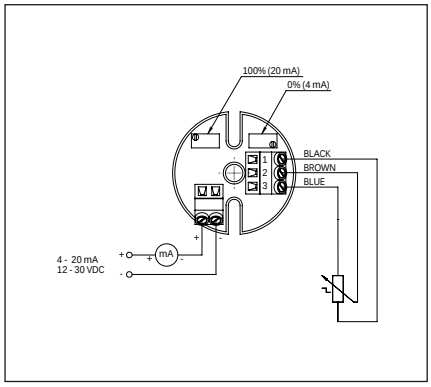

Control unit XT42SI Ex

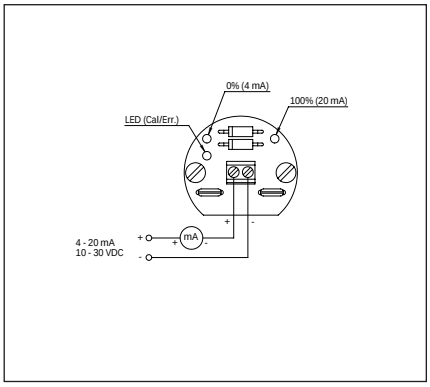

Control unit Magnetostrictive

Some further data according to chapter Control Units 1011

Approvals / Certificates

ATEX-Approval for accuracy K5.. / K10.. / K15..*

II 1/2G Ex c ia IIC T6 - T3 Ga/Gb	II 2G Ex c d IIC T6 - T4 Gb	II 2G Ex c d IIC T6 - T4 Gb
II 1/2G Ex c d ia IIC T6 - T4 Ga/Gb	II 2D Ex c tb IIIC T80°C - T190°C bzw. T125°C Db IP6X	II 2D Ex c tb IIIC T80°C - T95°C bzw. T125°C Db IP6X

Type of protection intrinsic safety Ex ia IIC passive multi-pole device	U_i ≤ 30 V	I_i ≤ 150 mA		
Type of protection intrinsic safety Ex ia IIC with built-in separately certified measuring transducer		see appropriate special certificate		
Type of protection intrinsic safety Ex ia IIC switch or temperature switch	I_i ≤ 100 mA			
Type of protection intrinsic safety Ex ia IIC temperature sensor	U_N ≤ 28 V	I_i ≤ 100 mA	P_i ≤ 700 mW	
Type of protection “flameproof enclosure” passive multi-pole device	U_N ≤ 30 VDC/AC	I_N ≤ 150 mA		
Type of protection “flameproof enclosure” temperature switch / sensor	U_N ≤ 100 VDC/AC	I_N ≤ 300 mA	P_{SN} ≤ 1 W	P_{FN} ≤ 700 mW

ATEX-Approval for accuracy K1..*

II 2G Ex ia IIB/IIC T6 - T1 Gb	II 2G Ex d IIC T4	

Type of protection intrinsic safety Ex ia IIC	U_i ≤ 30 V	I_i ≤ 200 mA	P_i ≤ 1000 mW
Temperature class	T6	T5	T4 - T2
Ambient temperature(T_a)	-40°C ... 40°C	-40°C ... 55°C	-40°C ... 85°C

The bypass level indicator-mini are based on a modular design and can be arranged individually.
Type key page 302 - 305

* = The approval is dependent on the equipment combination

Heinrich Kübler AG
Ruessenstrasse 4 | CH-6340 Baar | Phone +41 (0)41 766 62 62 | Fax +41 (0)41 766 62 63 | E-Mail info@kubler.ch | Internet www.kubler.ch

Type **ALF/../V/../..-M..**

Housing:	Aluminium anodized
Cable entry:	M20 x 1.5
Ingress protection class:	IP 65
Ambient temperature:	-40°C ... 100°C
Level transmitter tube material quality:	Stainless steel
Mounting:	Tension strap
Minimum measures:	T: 27 mm / L1: 40 mm / Ub: 50 mm

Accuracy

Accuracy:	5 / 10 / 15 mm
Ambient temperature / ATEX Exia:	
- K5 / K10 / K15:	-30°C ... 130°C
- K5HTF / K10HTF / K15HTF:	-40°C ... 200°C / -40°C ... 180°C
- K5HT / K10HT / K15HT:	-40°C ... 250°C / -40°C ... 180°C

Option control unit / Page 312

Control unit:	- Programmable - Hart-programmable / SIL2 - Profibus PA - Foundation Fieldbus

Approvals / Certificates

ABS / ATEX / BV / EAC / GL / LR

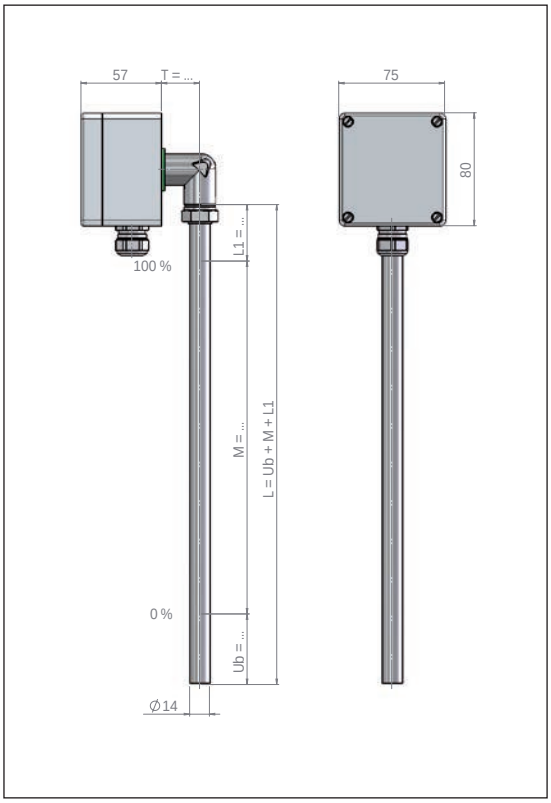

Type **ALDA/../V/../EXDG-M..**

Housing:	Aluminium coated RAL 9006
Cable entry:	M20 x 1.5
Ingress protection class:	IP 68
Ambient temperature:	-40°C ... 100°C
Level transmitter tube material quality:	Stainless steel
Mounting:	Tension strap
Minimum measures:	T: 50 mm / L1: 40 mm / Ub: 50 mm

Accuracy

Accuracy:	5 / 10 / 15 mm
Ambient temperature	
- K5 / K10 / K15:	-30°C ... 120°C
- K5HTF / K10HTF / K15HTF:	-40°C ... 120°C
- K5HT / K10HT / K15HT:	-40°C ... 120°C

Option control unit / Page 312

Control unit:	- Programmable - Hart-programmable / SIL2 - Profibus PA - Foundation Fieldbus

Approvals / Certificates

ABS / ATEX / BV / EAC / GL / LR

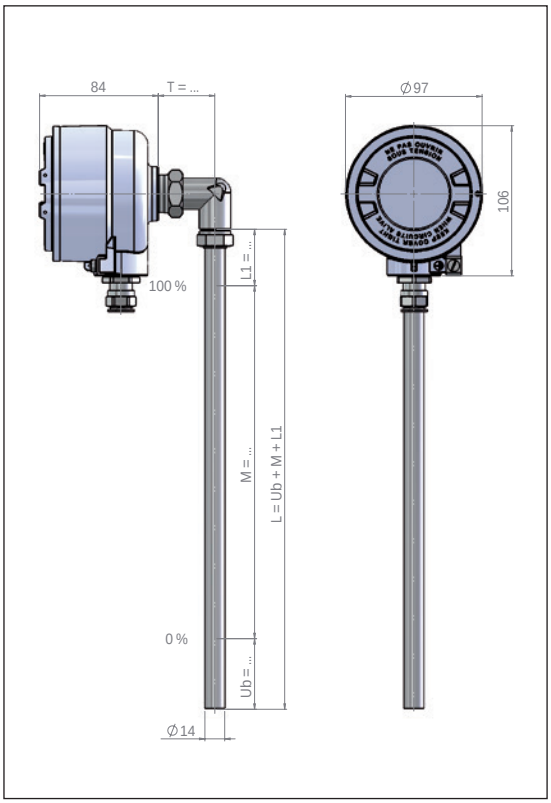

The bypass level indicator-mini are based on a modular design and can be arranged individually.
Type key page 302 - 305

Type **DAALA/../V/..-M..**

Electrical connection:	Aluminium anodized
Cable entry:	M20 x 1.5
Ingress protection class:	IP 65
Ambient temperature:	-40°C ... 60°C
Display:	4-digit LED display in red / Free scaling
Current input:	4 ... 20 mA
Level transmitter tube material quality:	Stainless steel
Mounting:	Tension strap
Minimum measures:	T: 50 mm / L1: 40 mm / Ub: 50 mm

Accuracy:	5 / 10 / 15 mm
Ambient temperature	
- K5 / K10 / K15:	-30°C ... 130°C
- K5HTF / K10HTF / K15HTF:	-40°C ... 200°C
- K5HT / K10HT / K15HT:	-40°C ... 250°C

Option control unit / Page 312

Control unit:	- Programmable - Hart-programmable / SIL2 - Profibus PA - Foundation Fieldbus

Approvals / Certificates

EAC

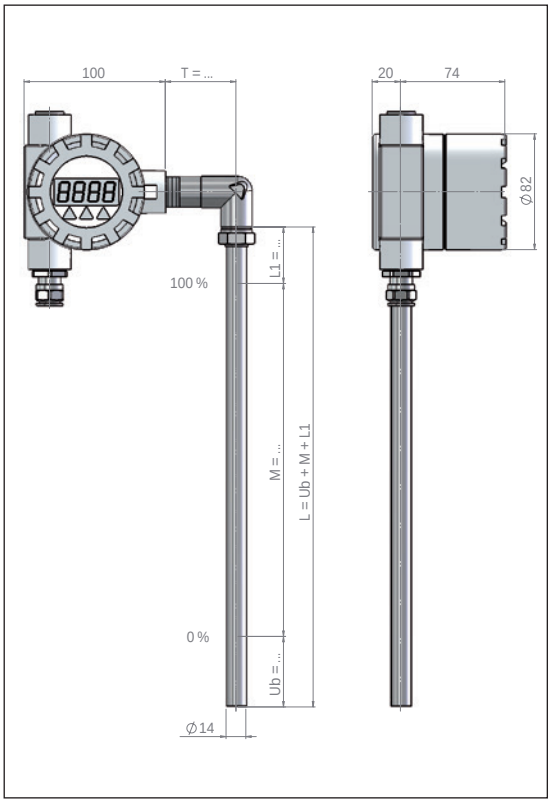

Type **DAAVDA/../V/../EXDG-M..**

Electrical connection:	Stainless steel electropolished
Cable entry:	M20 x 1.5
Ingress protection class:	IP 68
Ambient temperature:	-40°C ... 60°C
Display:	4-digit LED display in red / Free scaling
Current input:	4 ... 20 mA
Level transmitter tube material quality:	Stainless steel
Mounting:	Tension strap
Minimum measures:	T: 50 mm / L1: 40 mm / Ub: 50 mm

Accuracy:	5 / 10 / 15 mm
Ambient temperature	
- K5 / K10 / K15:	-30°C ... 130°C (Exd 120°C)
- K5HTF / K10HTF / K15HTF:	-40°C ... 180°C (Exd 120°C)
- K5HT / K10HT / K15HT:	-40°C ... 180°C (Exd 120°C)

Option control unit / Page 312

Control unit:	- Programmable - Hart-programmable / SIL2 - Profibus PA - Foundation Fieldbus

Approvals / Certificates

ATEX / EAC

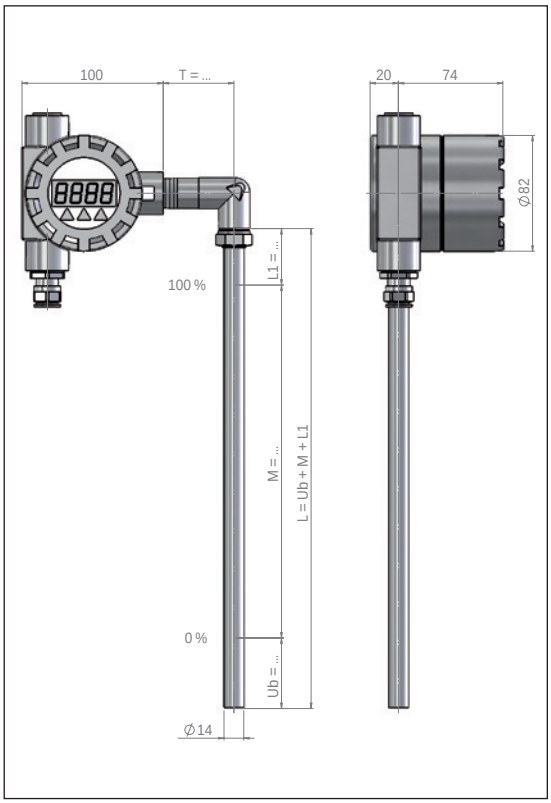

The bypass level indicator-mini are based on a modular design and can be arranged individually.
Type key page 302 - 305

Heinrich Kübler AG
Ruessenstrasse 4 | CH-6340 Baar | Phone +41 (0)41 766 62 62 | Fax +41 (0)41 766 62 63 | E-Mail info@kubler.ch | Internet www.kubler.ch

Type **AVA/../V/..-M..**

Electrical connection:	Stainless steel A4 (SS316)
Cable entry:	M20 x 1.5
Ingress protection class:	IP 67
Ambient temperature:	-40°C ... 85°C
Level transmitter tube material quality:	Stainless steel
Mounting:	Tension strap
Minimum measures:	T: 50 mm / L1: 40 mm / Ub: 50 mm

Accuracy

Accuracy:	5 / 10 / 15 mm
Ambient temperature / ATEX Exia:	
- K5 / K10 / K15:	-30°C ... 130°C
- K5HTF / K10HTF / K15HTF:	-40°C ... 200°C / -40°C ... 180°C
- K5HT / K10HT / K15HT:	-40°C ... 250°C / -40°C ... 180°C

Option control unit / Page 312

Control unit:	- Programmable - Hart-programmable / SIL2 - Profibus PA - Foundation Fieldbus

Approvals / Certificates

ABS / ATEX / BV / EAC / GL / LR

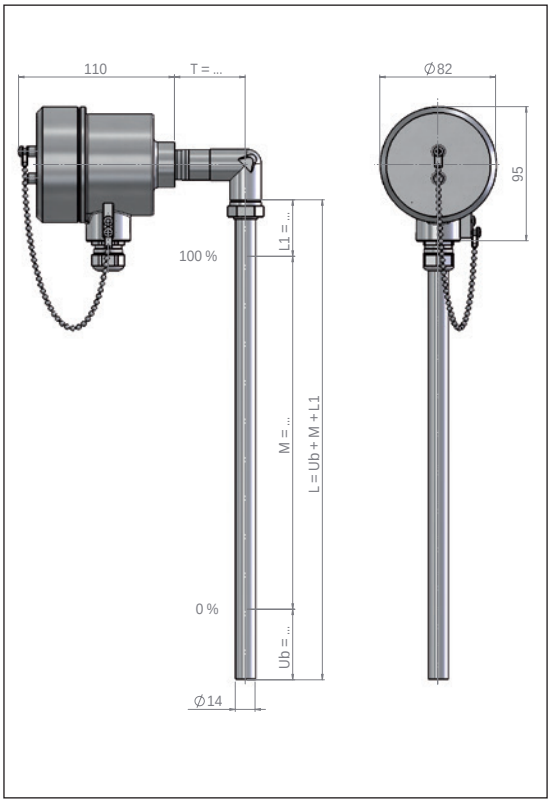

Type **AVM/../V/../..-M..**

Electrical connection:	Stainless steel A4 (SS316)
Cable entry:	M16 x 1.5
Ingress protection class:	IP 68
Ambient temperature:	-40°C ... 85°C / ATEX temperature p. 312
Level transmitter tube material quality:	Stainless steel
Mounting:	Tension strap
Minimum measures:	L1: 40 mm / Ub: 50 mm

Accuracy

Accuracy:	0.2 mm
Ambient temperature / ATEX Exia:	
- K1:	-40°C ... 125°C / ATEX temperature p. 312
- K1HT:	-40°C ... 250°C / ATEX temperature p. 312

Control unit

- MST / MSTB:	- Programmable 4 ... 20 mA, 10 ... 30 VDC
- MSTH / MSTHB:	- Hart-programmable 4 ... 20 mA, 10 ... 30 VDC

Approvals / Certificates

ATEX / EAC / IECEX / SIL2

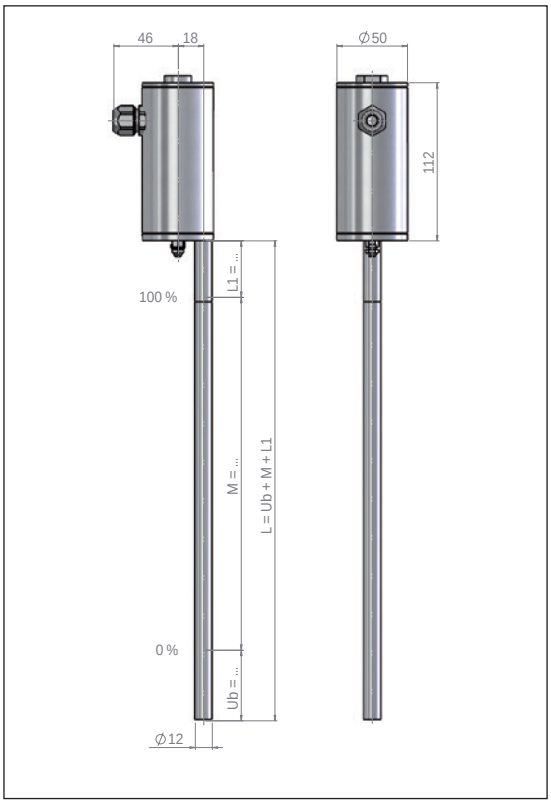

The bypass level indicator-mini are based on a modular design and can be arranged individually.
Type key page 302 - 305

Type	**AVDM/../V/../EXDG-M..**
Electrical connection:	Stainless steel A4 (SS316)
Cable entry:	M20 x 1.5
Ingress protection class:	IP 68
Ambient temperature:	ATEX temperature page 312
Level transmitter tube material quality:	Stainless steel
Mounting:	Tension strap
Minimum measures:	L1: 40 mm / Ub: 50 mm
Accuracy	
Accuracy:	0.2 mm
Ambient temperature - K1:	ATEX temperature page 312
Control unit	
- MSTB:	- Programmable 4 ... 20 mA, 10 ... 30 VDC
- MSTHB:	- Hart-programmable 4 ... 20 mA, 10 ... 30 VDC
Approvals / Certificates	
ATEX / EAC / IECEX / SIL2	

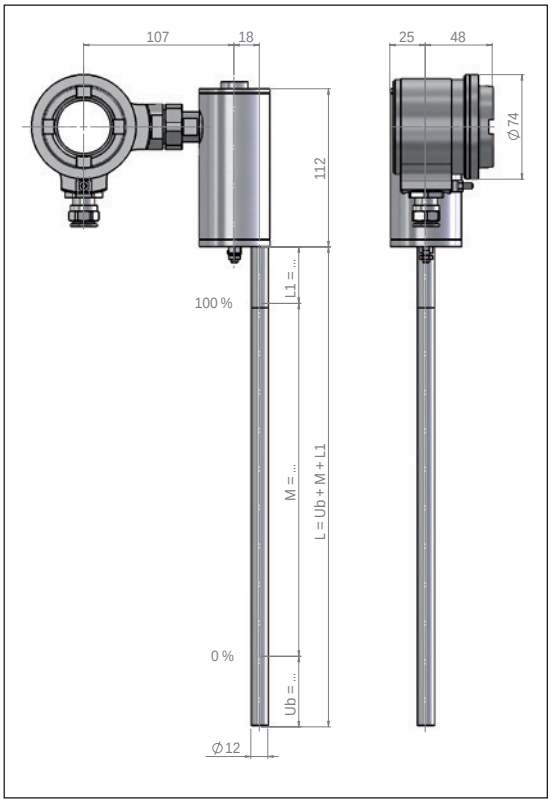

Type	**DAAVDM/../V/../EXDG-M..**
Electrical connection:	Stainless steel A4 (SS316)
Cable entry:	M20 x 1.5
Ingress protection class:	IP 68
Ambient temperature:	ATEX temperature page 312
Level transmitter tube material quality:	Stainless steel
Mounting:	Tension strap
Minimum measures:	L1: 40 mm / Ub: 50 mm
Accuracy	
Accuracy:	0.2 mm
Ambient temperature - K1:	ATEX temperature page 312
Control unit	
- MSTB:	- Programmable 4 ... 20 mA, 10 ... 30 VDC
- MSTHB:	- Hart-programmable 4 ... 20 mA, 10 ... 30 VDC
Approvals / Certificates	
ATEX / EAC / IECEX / SIL2	

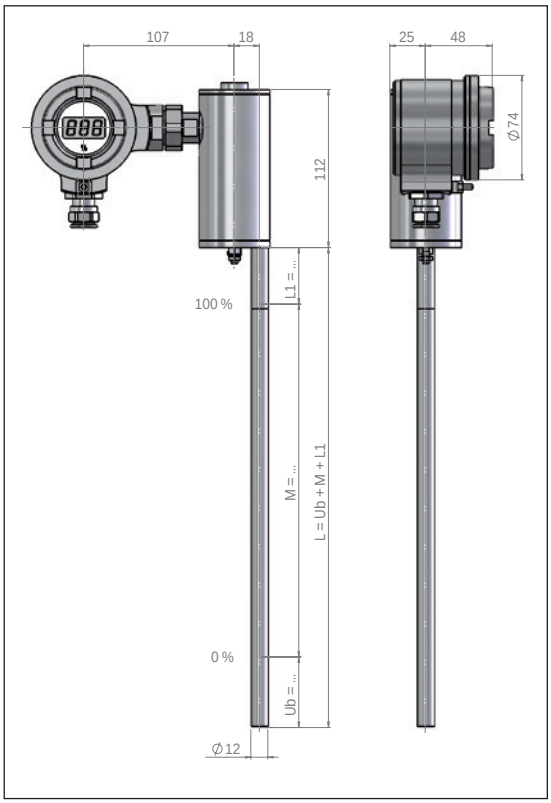

The bypass level indicator-mini are based on a modular design and can be arranged individually.
Type key page 302 - 305

Heinrich Kübler AG
Ruessenstrasse 4 | CH-6340 Baar | Phone +41 (0)41 766 62 62 | Fax +41 (0)41 766 62 63 | E-Mail info@kubler.ch | Internet www.kubler.ch

The bypass level indicator-mini are based on a modular design and can be arranged individually.
Type key page 302 - 305

Connection diagram

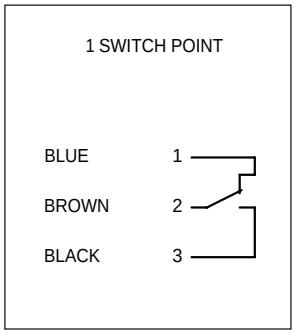

Change over (SPDT)

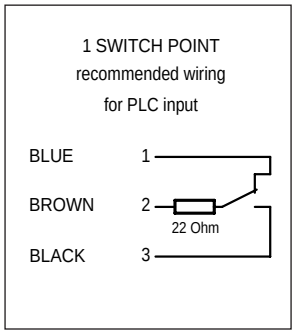

Change over (SPDT)
with resistor

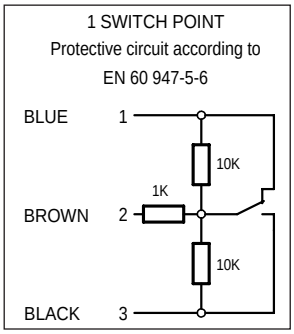

Change over (SPDT)
with NAMUR EN 60947

Approvals / Certificates

ATEX*

II 2G Ex ia IIC T6 - T1 Gb	II 2G Ex d IIC T6 - T4 Gb
II 2D Ex tb IIIC T80°C - T300°C Db IP6X	II 2D Ex tb IIIC T80°C - T120°C Db IP6X

Type of protection intrinsic safety Ex ia IIC	I_i ≤ 100 mA		
Type of protection intrinsic safety Ex ia IIC with option /R22 (resistor)	I_i ≤ 100 mA		
Type of protection intrinsic safety Ex ia IIC with option /N (NAMUR EN 60947)	U_i ≤ 15 VDC	I_i ≤ 60 mA	
Type of protection „flameproof enclosure“	U_N ≤ 250 VDC/AC	I_N ≤ 100 mA	
Type of protection „flameproof enclosure“ with option /R22 (resistor)	U_N ≤ 250 VDC/AC	I_N ≤ 100 mA	P_V ≤ 0.21 W
Type of protection „flameproof enclosure“ with option /N (NAMUR EN 60947)	U_N ≤ 15 VDC	I_N ≤ 60 mA	

The bypass level indicator-mini are based on a modular design and can be arranged individually.
Type key page 302 - 305

* = The approval is dependent on the equipment combination

Heinrich Kübler AG
Ruessenstrasse 4 | CH-6340 Baar | Phone +41 (0)41 766 62 62 | Fax +41 (0)41 766 62 63 | E-Mail info@kubler.ch | Internet www.kubler.ch

Type	**RU40/../../../..** **RU40/../../../../EXIAG**
Housing:	Aluminium anodized
Ingress protection class:	IP 68
Mounting:	Free positionable on the chamber
Ambient temperature	
- with PVC connection cable:	-20°C ... 80°C
- with Silikon connection cable:	-40°C ... 150°C
- with PUR connection cable:	-40°C ... 80°C
- with Radox connection cable:	-35°C ... 120°C
Switch function	
Function:	Change over (SPDT)
Switch behaviour:	Bistable
Switching capacity:	230 V / 0.5 A / 30 VA
Switching capacity / ATEX Exia:	Exia 100 mA / Exia NAMUR 60 mA
Switching hysteresis:	5 mm ... 7 mm
Options	
- Switch option .. /R22:	Resistor 22 Ohm / 0.21 W
- Switch option .. /N:	NAMUR EN 60947

Approvals / Certificates

ABS / ATEX / BV / EAC / GL / LR / SIL1

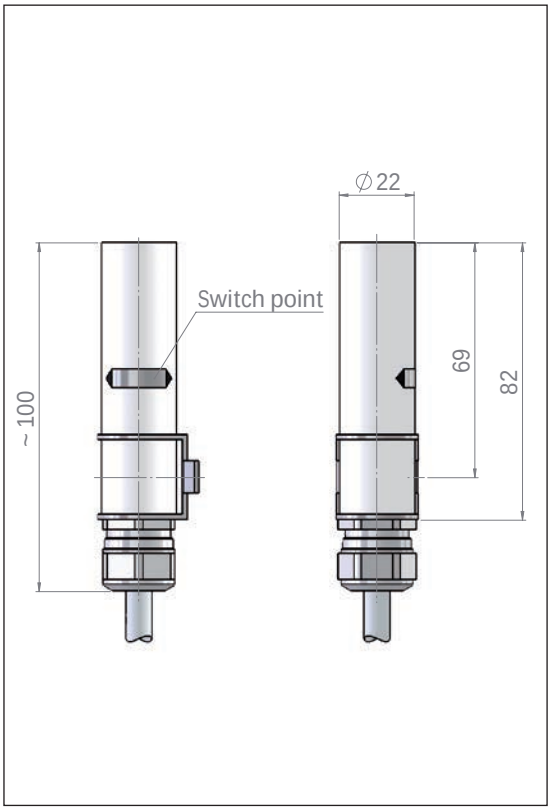

Type	**RUD40/../../../../EXDG**
Housing:	Aluminium anodized
Ingress protection class:	IP 68
Mounting:	Free positionable on the chamber
Ambient temperature:	
- with PVC connection cable:	-20°C ... 80°C
- with Silikon connection cable:	-40°C ... 120°C
- with PUR connection cable:	-40°C ... 80°C
- with Radox connection cable:	-35°C ... 120°C
Switch function	
Function:	Change over (SPDT)
Switch behaviour:	Bistable
Switching capacity:	U_N 250 V / P_{SN} 50 W/VA / P_{FN} 700 mW
- NAMUR EN 60947:	U_N 15 VDC / I_N 60 mA
- with resistor:	U_N 250 V / I_N 100 mA
Switching hysteresis:	5 mm ... 7 mm
Options	
- Switch option .. /R22:	Resistor 22 Ohm / 0.21 W
- Switch option .. /N:	NAMUR EN 60947

Approvals / Certificates

ABS / ATEX / BV / EAC / GL / LR / SIL1

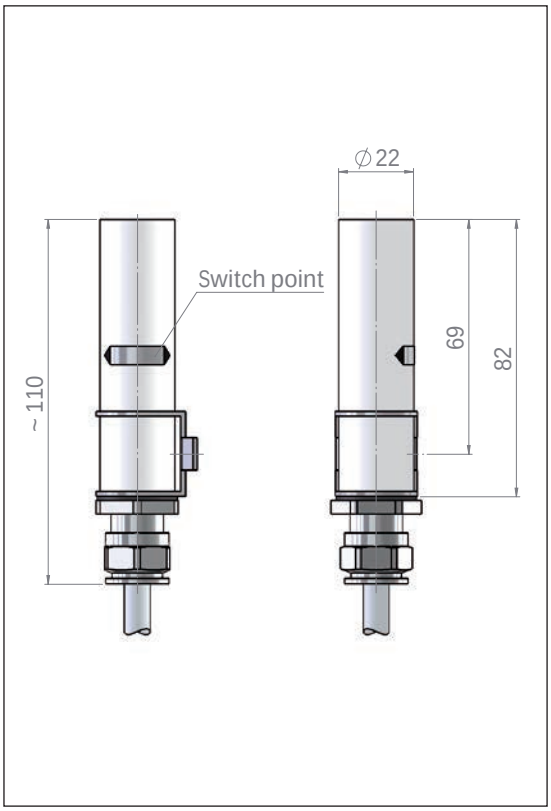

The bypass level indicator-mini are based on a modular design and can be arranged individually.
Type key page 302 - 305

Type	**RUV40/../../../..** **RUV40/../../../../EXIAG**

Housing:	Stainless steel
Ingress protection class:	IP 68
Mounting:	Free positionable on the chamber
Ambient temperature	
- with PVC connection cable:	-20°C ... 80°C
- with Silikon connection cable:	-40°C ... 150°C
- with PUR connection cable:	-40°C ... 80°C
- with Radox connection cable:	-35°C ... 120°C

Switch function	
Function:	Change over (SPDT)
Switch behaviour:	Bistable
Switching capacity:	230 V / 0.5 A / 30 VA
Switching capacity / ATEX Exia:	Exia 100 mA / Exia NAMUR 60 mA
Switching hysteresis:	5 mm ... 7 mm

Options	
- Switch option .. /R22:	Resistor 22 Ohm / 0.21 W
- Switch option .. /N:	NAMUR EN 60947

Approvals / Certificates

ABS / ATEX / BV / EAC / GL / LR / SIL1

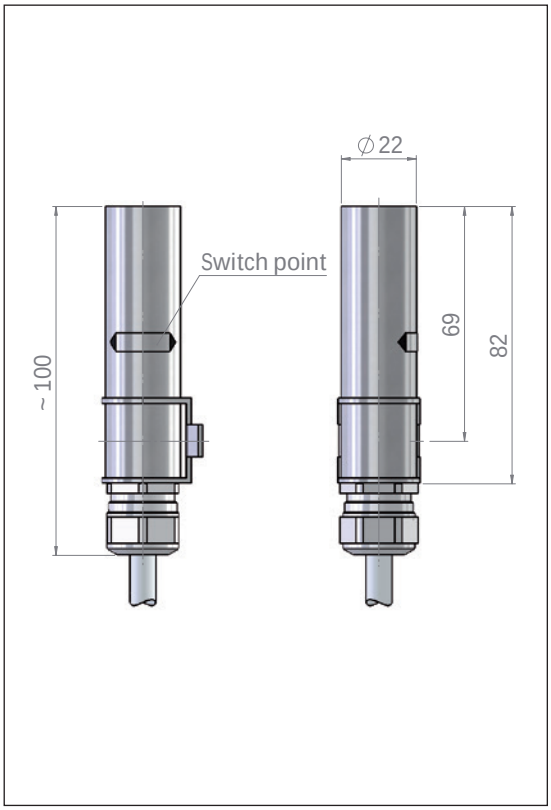

Type	**RUVD40/../../../../EXDG**

Housing:	Stainless steel
Ingress protection class:	IP 68
Mounting:	Free positionable on the chamber
Ambient temperature	
- with PVC connection cable:	-20°C ... 80°C
- with Silikon connection cable:	-40°C ... 120°C
- with PUR connection cable:	-40°C ... 80°C
- with Radox connection cable:	-35°C ... 120°C

Switch function	
Function:	Change over (SPDT)
Switch behaviour:	Bistable
Switching capacity:	U_N 250 V / P_{SN} 50 W/VA / P_{FN} 700 mW
- NAMUR EN 60947:	U_N 15 VDC / I_N 60 mA
- with resistor:	U_N 250 V / I_N 100 mA
Switching hysteresis:	5 mm ... 7 mm

Options	
- Switch option .. /R22:	Resistor 22 Ohm / 0.21 W
- Switch option .. /N:	NAMUR EN 60947

Approvals / Certificates

ABS / ATEX / BV / EAC / GL / LR / SIL1

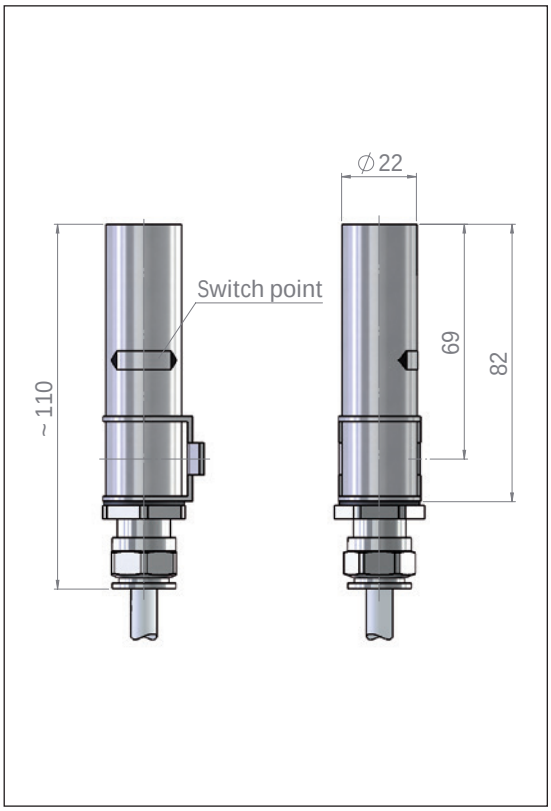

The bypass level indicator-mini are based on a modular design and can be arranged individually.
Type key page 302 - 305

Heinrich Kübler AG
Ruessenstrasse 4 | CH-6340 Baar | Phone +41 (0)41 766 62 62 | Fax +41 (0)41 766 62 63 | E-Mail info@kubler.ch | Internet www.kubler.ch

Type	**ALERU40/..** **ALERU40/../EXIAG**
Housing:	Aluminium anodized
Cable entry:	M20 x 1.5
Ingress protection class:	IP 65
Mounting:	Free positionable on the chamber
Ambient temperature:	-40°C ... 130°C

Switch function	
Function:	Change over (SPDT)
Switch behaviour:	Bistable
Switching capacity:	230 V / 0.5 A / 30 VA
Switching capacity / ATEX Exia:	Exia 100 mA / Exia NAMUR 60 mA
Switching hysteresis:	5 mm ... 7 mm

Options	
- Switch option .. /R22:	Resistor 22 Ohm / 0.21 W
- Switch option .. /N:	NAMUR EN 60947

Approvals / Certificates

ABS / ATEX / BV / EAC / GL / LR / SIL1

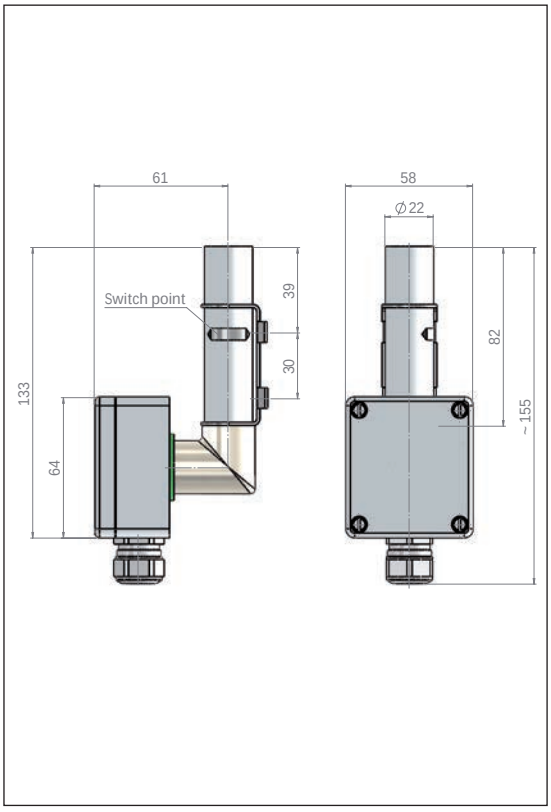

Type	**ALFRU40/..** **ALFRU40/../EXIAG**
Housing:	Aluminium anodized
Cable entry:	M20 x 1.5
Ingress protection class:	IP 65
Mounting:	Free positionable on the chamber
Ambient temperature:	-40°C ... 130°C

Switch function	
Function:	Change over (SPDT)
Switch behaviour:	Bistable
Switching capacity:	230 V / 0.5 A / 30 VA
Switching capacity / ATEX Exia:	Exia 100 mA / Exia NAMUR 60 mA
Switching hysteresis:	5 mm ... 7 mm

Options	
- Switch option .. /R22:	Resistor 22 Ohm / 0.21 W
- Switch option .. /N:	NAMUR EN 60947

Approvals / Certificates

ABS / ATEX / BV / EAC / GL / LR / SIL1

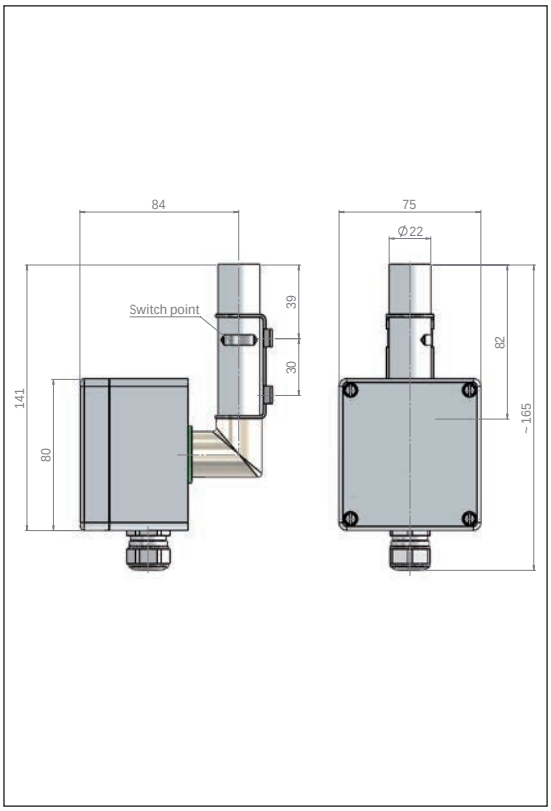

The bypass level indicator-mini are based on a modular design and can be arranged individually.
Type key page 302 - 305

Type	**AIT** **AHT**

Armaflex isolation AIT

Material quality:	Cellular plastic based on synthetic rubber
Fire behaviour:	Self-extinguishing, not drippy, not flammable
Nominal thickness:	32 mm
Ambient temperature:	-50°C ... 105°C
UV-resistance:	No
Approvals:	-

Armaflex isolation AHT

Material quality:	Cellular plastic based on synthetic rubber
Fire behaviour:	Self-extinguishing, not drippy, not flammable
Nominal thickness:	25 mm
Ambient temperature:	-50°C ... 150°C
UV-resistance:	Yes
Approvals:	-

Type	**H..A** **H..B**

Self-regulating antifreeze heat tracing

Type:	H75A H75B acc. to EExe / T4
Terminal box:	GFK black with cable entry M25
Protective shell:	Fluorpolymer
Power supply:	230V AC
Power output:	76 W/m at 10°C
Holding temperature:	~10°C / Frost protection (32 mm Isolation necessary)
Steam-flushing:	No
Ambient temperature:	-40°C ... 75°C
Approvals / Certificates:	ATEX

Self-regulating antifreeze heat tracing

Type:	H150A H150B acc. to EExe / T2
Terminal box:	GFK black with cable entry M25
Protective shell:	Fluorpolymer
Power supply:	230V AC
Power output:	50 W/m at 10°C
Holding temperature:	~10°C / Frost protection (32 mm Isolation necessary)
Steam-flushing:	Yes
Ambient temperature:	-40°C ... 150°C
Approvals / Certificates:	ATEX

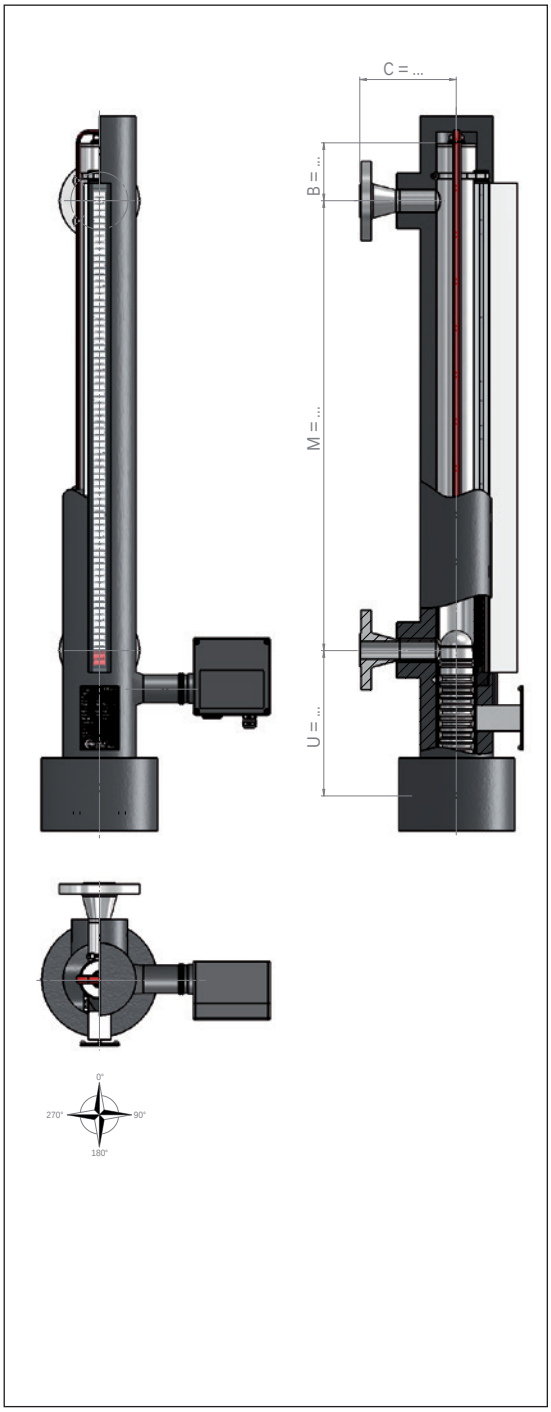

Approvals / Certificates

The bypass level indicator-mini are based on a modular design and can be arranged individually.
Type key page 302 - 305

Heinrich Kübler AG
Ruessenstrasse 4 | CH-6340 Baar | Phone +41 (0)41 766 62 62 | Fax +41 (0)41 766 62 63 | E-Mail info@kubler.ch | Internet www.kubler.ch

Type	**SW**
Rock-wool isolation SW	
Material quality:	Rock-woll with crome-nickel cover (Removable)
Nominal thickness:	~50 mm
Ambient temperature:	-50°C ... 750°C
UV-resistance:	Yes
Approvals:	ATEX

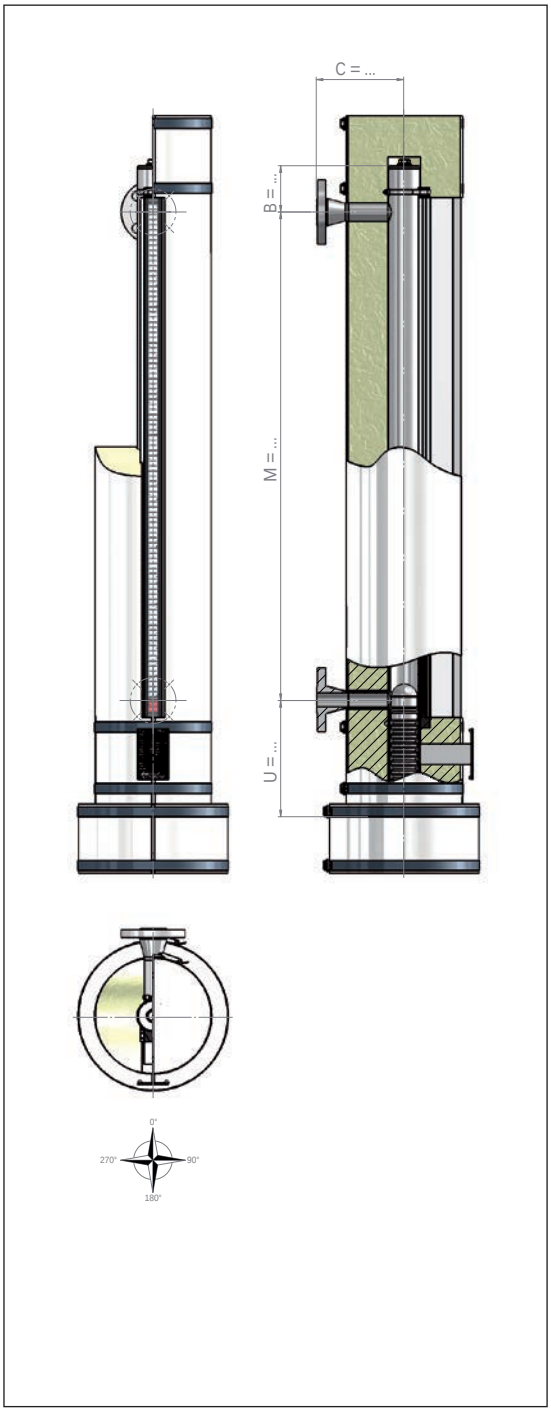

Approvals / Certificates

The bypass level indicator-mini are based on a modular design and can be arranged individually.
Type key page 302 - 305

Chamber end top

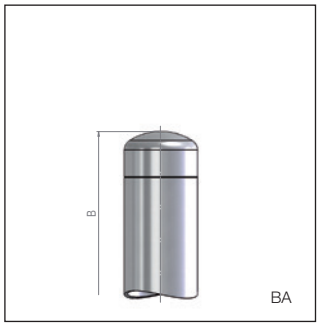

Tube cap

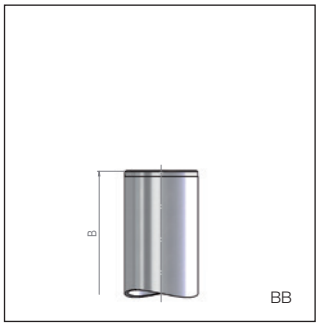

Tube plate

Tube plate
with vent plug G ≤ 1/4“

Tube plate with
vent plug G ≥ 1/2“ / NPT ≥ 1/4“

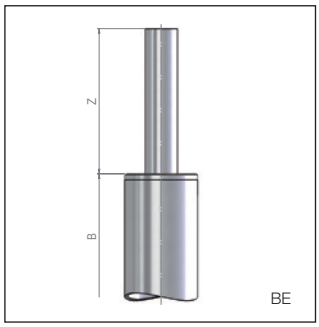

Tube plate
with vent welding stub end

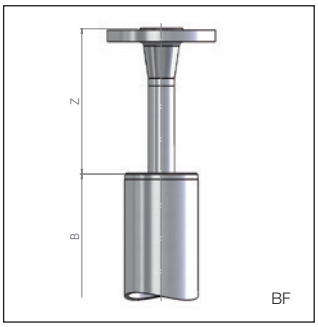

Tube plate
with vent flange

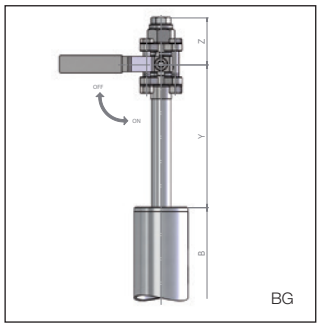

Tube plate
with vent ball valve

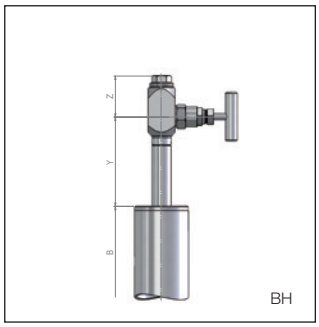

Tube plate
with vent needle valve

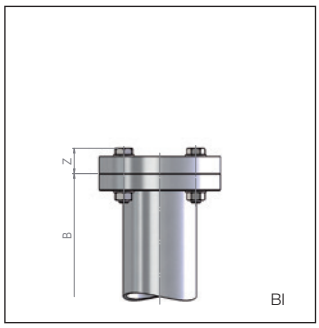

Flanged connection

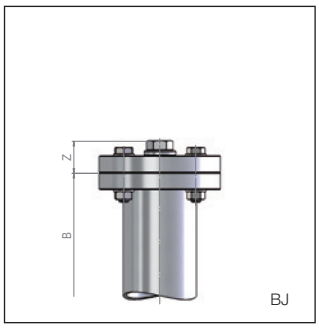

Flanged connection
with vent plug G ≤ 1/4“

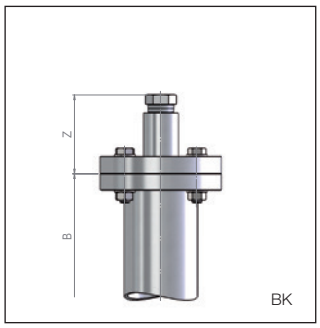

Flanged connection with
vent plug G ≥ 1/2“ / NPT ≥ 1/4“

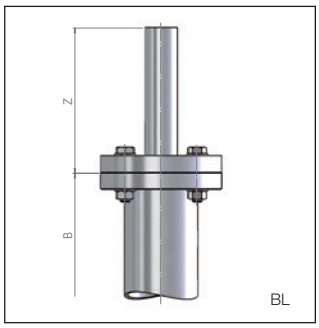

Flanged connection
with vent welding stub end

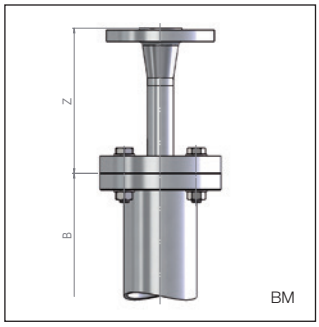

Flanged connection
with vent flange

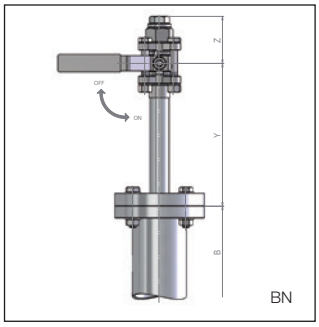

Flanged connection
with vent ball valve

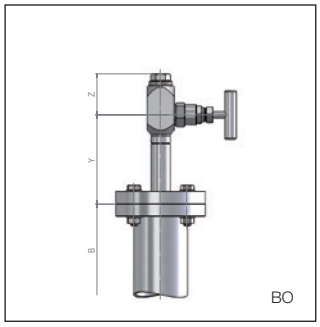

Flanged connection
with vent needle valve

The bypass level indicator-mini are based on a modular design and can be arranged individually.
Type key page 302 - 305

Heinrich Kübler AG
Ruessenstrasse 4 | CH-6340 Baar | Phone +41 (0)41 766 62 62 | Fax +41 (0)41 766 62 63 | E-Mail info@kubler.ch | Internet www.kubler.ch

Chamber end top

Pressure rating	**6 / 150#**		
	B	Y	Z
	Measure in ~ mm		
Tube cap	-	-	-
Tube plate	50	-	-
Tube plate with vent plug G1/4“	50	-	20
Tube plate with vent plug NPT1/2“	50	-	30
Tube plate with vent welding stub end	50	-	100
Tube plate with vent flange	50	-	100
Tube plate with vent ball valve G..	50	120	55
Tube plate with vent needle valve G..	50	120	50
Flanged connection	100	-	30
Flanged connection with vent plug G1/4“	100	-	35
Flanged connection with vent plug NPT1/2“	100	-	65
Flanged connection with vent welding stub end	100	-	100
Flanged connection with vent flange	100	-	100
Flanged connection with vent ball valve G..	100	120	55
Flanged connection with vent needle valve G..	100	120	50

The bypass level indicator-mini are based on a modular design and can be arranged individually.
Type key page 302 - 305

Chamber end bottom

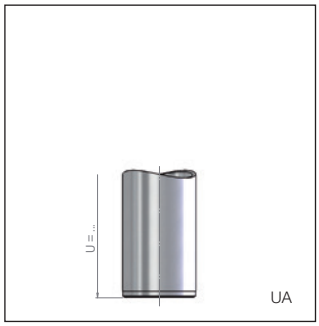

Tube plate

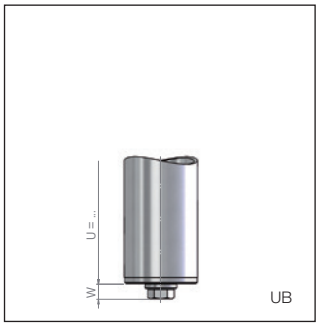

Tube plate
with drain plug G ≤ 1/4“

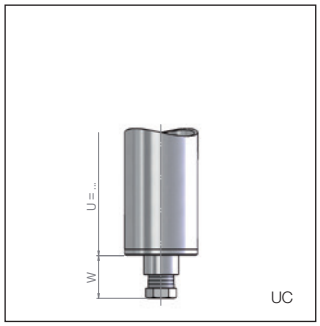

Tube plate with
drain plug G ≥ 1/2“ / NPT ≥ 1/4“

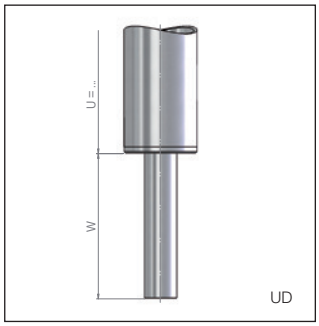

Tube plate
with drain welding stub end

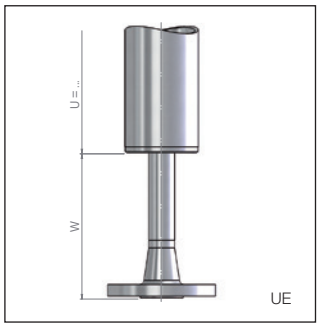

Tube plate
with drain flange

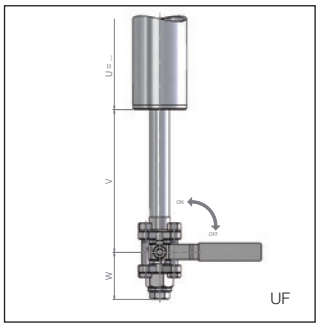

Tube plate
with drain ball valve

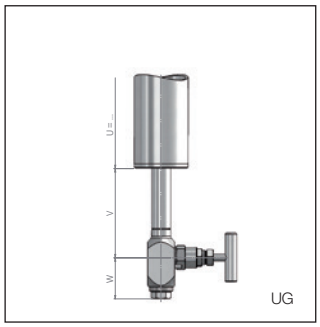

Tube plate
with drain needle valve

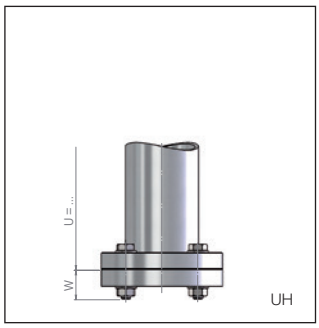

Flanged connection

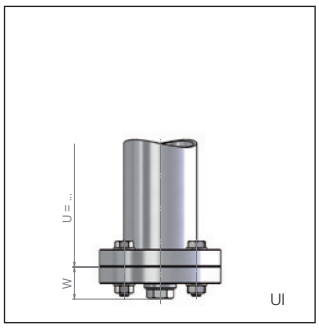

Flanged connection
with drain plug G ≤ 1/4“

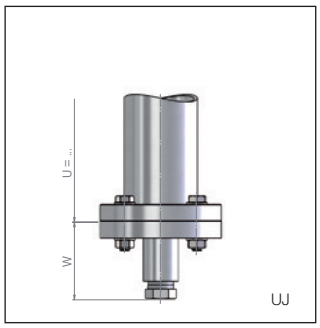

Flanged connection with
drain plug G ≥ 1/2“ / NPT ≥ 1/4“

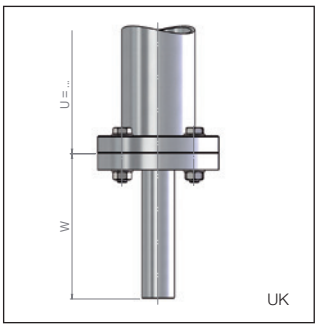

Flanged connection
with drain welding stub end

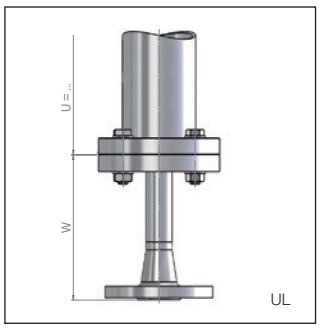

Flanged connection
with drain flange

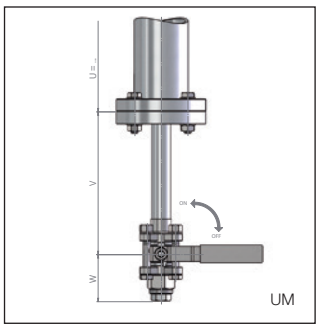

Flanged connection
with drain ball valve

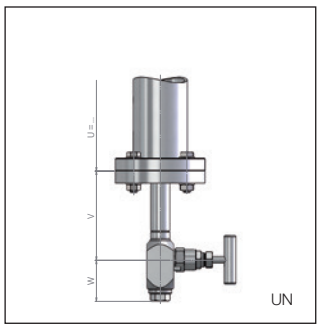

Flanged connection
with drain needle valve

The bypass level indicator-mini are based on a modular design and can be arranged individually.
Type key page 302 - 305

Heinrich Kübler AG
Ruessenstrasse 4 | CH-6340 Baar | Phone +41 (0)41 766 62 62 | Fax +41 (0)41 766 62 63 | E-Mail info@kubler.ch | Internet www.kubler.ch

Chamber end bottom

Pressure rating	6 / 150#		
	U	V	W
	Measure in ~ mm		
Tube plate	...^{S}	-	-
Tube plate with drain plug G1/4“	...^{S}	-	20
Tube plate with drain plug NPT1/2“	...^{S}	-	30
Tube plate with drain welding stub end	...^{S}	-	100
Tube plate with drain flange	...^{S}	-	100
Tube plate with drain ball valve G..	...^{S}	120	55
Tube plate with drain needle valve G..	...^{S}	120	50
Flanged connection	...^{S}	-	30
Flanged connection with drain plug G1/4“	...^{S}	-	35
Flanged connection with drain plug NPT1/2“	...^{S}	-	65
Flanged connection with drain welding stub end	...^{S}	-	100
Flanged connection with drain flange	...^{S}	-	100
Flanged connection with drain ball valve G..	...^{S}	120	55
Flanged connection with drain needle valve G..	...^{S}	120	50

Process connection / Support bracket

Welding neck flange (Standard)

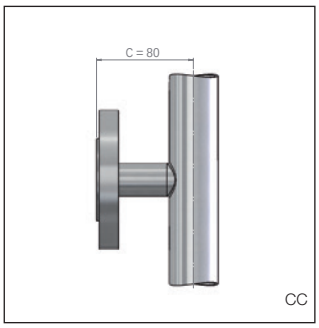

Blind flange

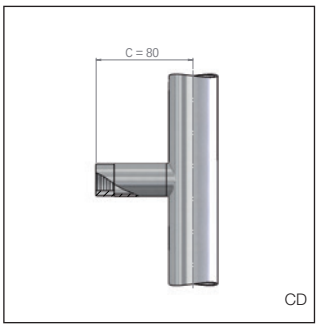

Female thread

Male thread

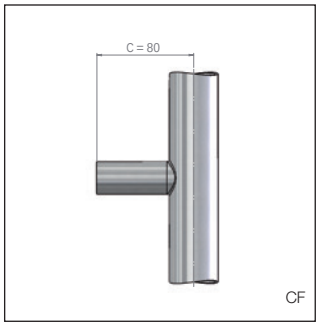

Welding stub end

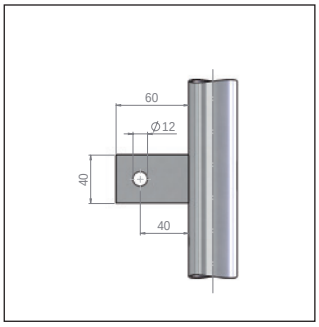

Support bracket HE-4840
(recommended for M ≥ 2000 mm)

The bypass level indicator-mini are based on a modular design and can be arranged individually.
Type key page 302 - 305

...^{S} = Depending on the Float length

Continuous display and monitoring of fluid levels

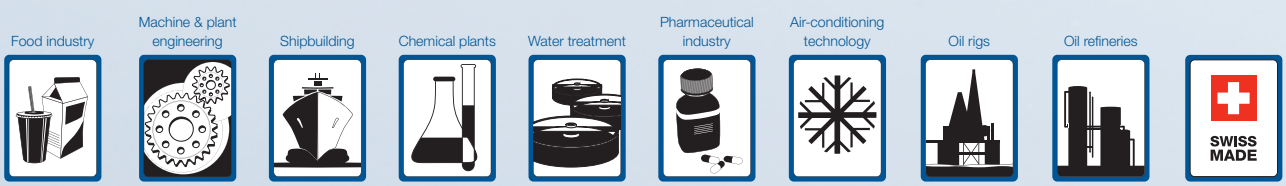

1016

TOP MOUNTED LEVEL INDICATOR

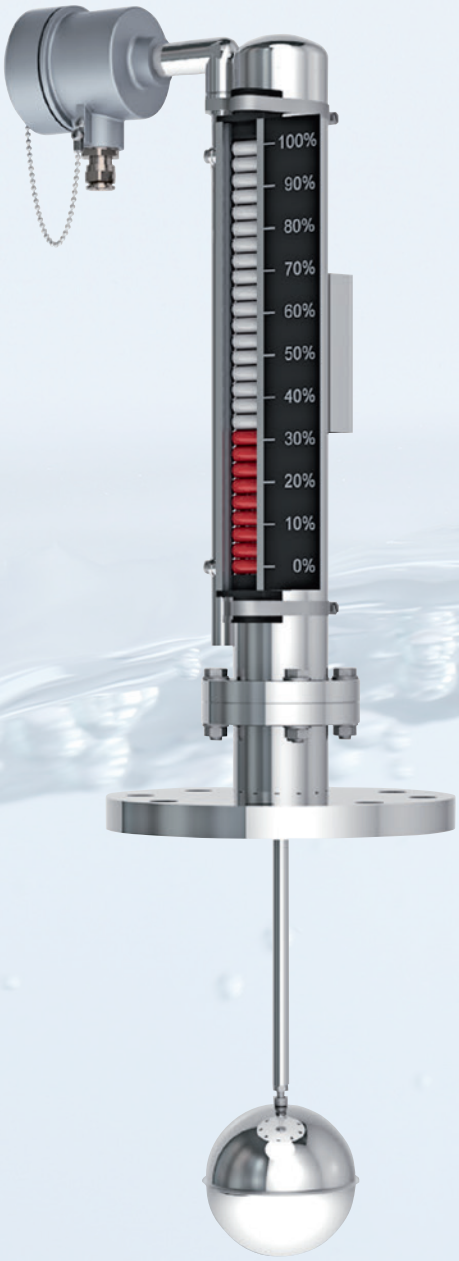

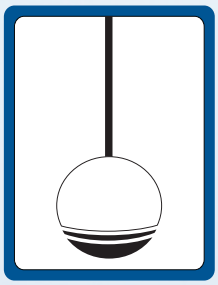

Table of content

Top Mounted Level Indicator / Content 330
Top Mounted Level Indicator / Functional description 331
Top Mounted Level Indicator / Type key 332
Top Mounted Level Indicator / Type key 333
Top Mounted Level Indicator / Type key 334
Top Mounted Level Indicator / Type key 335
Top Mounted Level Indicator / Type key 336
Top Mounted Level Indicator / Type key 337
Top Mounted Level Indicator / Stainless steel 338
Top Mounted Level Indicator / Stainless steel with stilling well 339
Top Mounted Level Indicator / Stainless steel 340
Top Mounted Level Indicator / Stainless steel with stilling well 341
Top Mounted Level Indicator / Stainless steel differential compensated 342
Top Mounted Level Indicator / PVC 343
Top Mounted Level Indicator / Polypropylene 344
Top Mounted Level Indicator / PVDF 345
Top Mounted Level Indicator / Stainless steel - ECTFE coated 346
Top Mounted Level Indicator / Stainless steel - PFA coated 347
Top Mounted Level Indicator / Ball float 348
Top Mounted Level Indicator / Ball float 349
Top Mounted Level Indicator / Ball float 350
Top Mounted Level Indicator / Cylindrical float 351
Top Mounted Level Indicator / Cylindrical float 352
Top Mounted Level Indicator / Cylindrical float 353
Top Mounted Level Indicator / Cylindrical float 354
Top Mounted Level Indicator / Cylindrical float 355
Top Mounted Level Indicator / Cylindrical float 356
Top Mounted Level Indicator / Cylindrical float 357
Top Mounted Level Indicator / Cylindrical float 358
Top Mounted Level Indicator / Cylindrical float 359
Top Mounted Level Indicator / Cylindrical float 360
Top Mounted Level Indicator / Cylindrical float 361
Top Mounted Level Indicator / Cylindrical float 362
Top Mounted Level Indicator / Cylindrical float 363
Top Mounted Level Indicator / Magnetic roller indicator 364
Top Mounted Level Indicator / Scale 365
Top Mounted Level Indicator / Level transmitter 366
Top Mounted Level Indicator / Level transmitter 367
Top Mounted Level Indicator / Level transmitter 368
Top Mounted Level Indicator / Level transmitter 369
Top Mounted Level Indicator / Level transmitter 370
Top Mounted Level Indicator / Level transmitter 371
Top Mounted Level Indicator / Magnetic switch 372
Top Mounted Level Indicator / Magnetic switch 373
Top Mounted Level Indicator / Magnetic switch 374
Top Mounted Level Indicator / Magnetic switch 375
Top Mounted Level Indicator / Magnetic switch 376
Top Mounted Level Indicator / Magnetic switch 377
Top Mounted Level Indicator / Magnetic switch 378
Top Mounted Level Indicator / Isolation / Heat tracing 380
Top Mounted Level Indicator / Isolation 381

Heinrich Kübler AG
Ruessenstrasse 4 | CH-6340 Baar | Phone +41 (0)41 766 62 62 | Fax +41 (0)41 766 62 63 | E-Mail info@kubler.ch | Internet www.kubler.ch

Functional description

Top mounted level indicators form an integral part of the pressure vessel. Via a process connection a standpipe is mounted on top of a tank or a vessel.

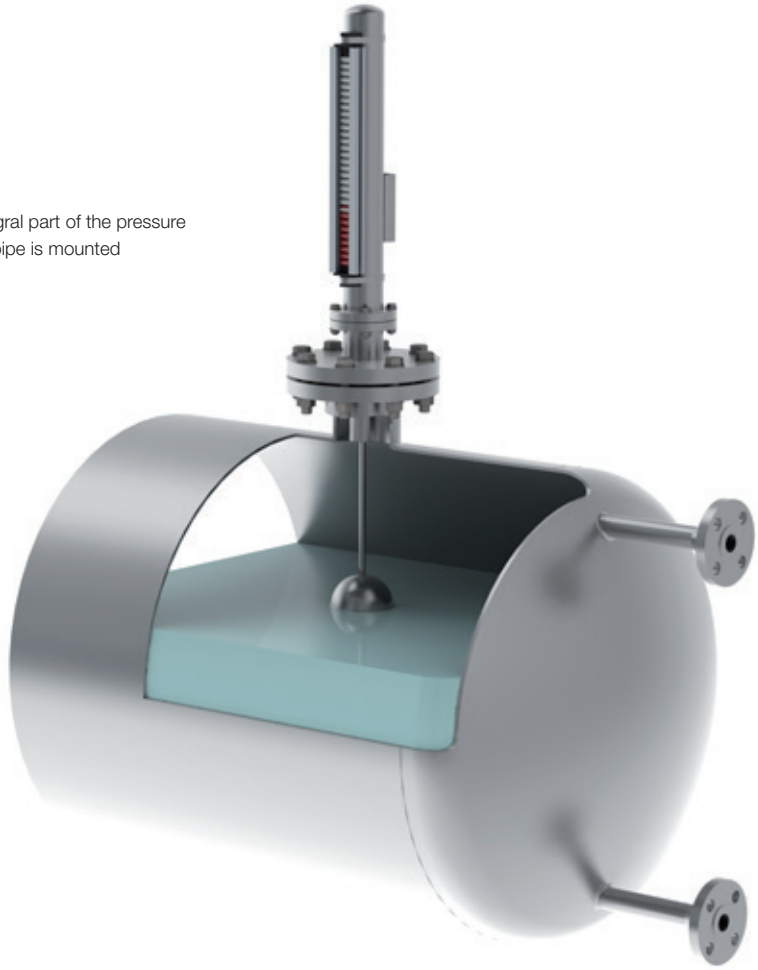

The top mounted pipe contains a magnetic system which is connected to a float and buoyancy rod system. The concentrated magnetic field of the permanent magnet transmits the liquid level of the tank below in proportion to the filling height in a contactless way through the wall of the top-mounted standpipe onto externally mounted displaying, recording and switching elements.

Design limits

Specific gravity:	≥ 300 kg/m³
Design pressure:	-1 bar ... 100 bar
Design temperature:	-196°C ... 400°C

Code 1

	Key 1 ... - **Version**
UNA[1]	Top mounted level indicator
UMG[1]	Top mounted level indicator with level transmitter

Code 2

	Key 1 (for process connection flange) ... - **Flange connection**		Key 1 (for process connection other) ... - **Other process connection**
FE[1]	Flange according to EN	GN[1]	Male thread G
FA[1]	Flange according to ANSI	NPTN[1]	Male thread NPT
F[1]	Flange according to …		
FS[1]	Flange according to drawing		

Code 3

	Key 1.1 (only for flange) ... / ... / ... - **Flange connection**		Key 1.2 (only for flange) ... / ... / ... - **Flange connection**		Key 1.3 (only for flange) ... / ... / ... - **Flange connection**
…	Flange nominal bore	…	Flange pressure rating	…	Flange facing

Code 3

	Key 1 (for process connection other) ... - **Size**
…	Threaded connection size

Example

Code	**1**		**2**		**3**						**4**												**5**		**6**				**7**				
Key	1	-	1	-	1.1	/	1.2	/	1.3	-	1	/	2	/	3	/	4	/	5	/	6	/	7	/	8	-	1	-	1	/	2	-	1	/	2	/	3	-
Example	UMG	-	FE	-	25	/	16	/	B1	-	ALF	/	TP43B	/	V	/	K5	/							EXIAG	-	DU	-	L…	/	A…	-	V	/	60	/	2	-

Black = not possible according to Atex / Blue = possible according to Atex Exia / Blue[1] = possible according to Atex Exia and Exd / Black[1] = possible according to Atex Exd

Heinrich Kübler AG
Ruessenstrasse 4 | CH-6340 Baar | Phone +41 (0)41 766 62 62 | Fax +41 (0)41 766 62 63 | E-Mail info@kubler.ch | Internet www.kubler.ch

Code 4

	Key 1 ... / ... / ... / ... / ... / ... / ... / ... - **Electrical connection level transmitter**		Key 2 ... / ... / ... / ... / ... / ... / ... / ... - **Control unit**		Key 3 ... / ... / ... / ... / ... / ... / ... / ... - **Level transmitter tube material quality**
ALE	Aluminium terminal box 64 x 58 x 34 mm (only without control unit)	TP43A[1]	TP5343A	V[1]	Stainless steel
		TP43B[1]	TP5343B Ex		
ALF	Aluminium terminal box 80 x 75 x 57 mm	TD35A[1]	TD5335A		
ALDA[1]	Aluminium terminal box Ø 95 x 84 mm	TD35B[1]	TD5335D Ex		
AVA	Stainless steel terminal box Ø 82 x 110 mm	TP50AP[1]	TP5350AP / PROFIBUS® PA		
AVDA[1]	Stainless steel terminal box Ø 82 x 110 mm	TP50BP[1]	TP5350BP Ex / PROFIBUS® PA		
AVM	Stainless steel terminal box Ø 50 x 117 mm	TP50AF[1]	TP5350AF / FOUNDATION™ Fieldbus		
AVDM[1]	Stainless steel terminal box Ø 169 x 117 mm	TP50BF[1]	TP5350BF Ex / FOUNDATION™ Fieldbus		
DAAVDM[1]	Stainless steel terminal box with LED display Ø 169 x 117 mm	TMT181A[1]	TMT181		
		TMT181B[1]	TMT181 Ex		
APA	Polyester terminal box 80 x 75 x 55 mm	ZMU[1]	XT42SI Ex		
APB	Polyester terminal box 80 x 75 x 55 mm / Exm	TAMX[1]	Other control unit		
ABA	ABS terminal box 80 x 82 x 55 mm	MST[1]	Magnetostrictive / 4 ... 20 mA		
K	Connection cable	MSTB[1]	Magnetostrictive / 4 ... 20 mA / Ex		
K68	Connection cable IP 68 (≥ G 3/8“)	MSTH[1]	Magnetostrictive / HART®-Protocol		
DAALA	Aluminium terminal box with LED display Ø 82 x 100 mm	MSTHB[1]	Magnetostrictive / HART®-Protocol / Ex		
DAAVDA[1]	Stainless steel terminal box with LED display Ø 82 x 100 mm				

Code 4

	Key 4 ... / ... / ... / ... / ... / ... / ... / ... - **Accuracy**		Key 5 (only for connection cable) ... / ... / ... / ... / ... / ... / ... / ... - **Length of cable**		Key 6 (only for connection cable) ... / ... /... / ... / ... / ... / ... / ... - **Connection cable**
K5[1]	Accuracy 5 mm / -30 ... 130°C	...	Length of cable in meter	PVC[1]	PVC connection cable
K5HTF[1]	Accuracy 5 mm / -40 ... 200°C			PVCB[1]	PVC connection cable with blue coating
K5HT[1]	Accuracy 5 mm / -40 ... 250°C			SIL[1]	Silicone connection cable
K10[1]	Accuracy 10 mm / -30 ... 130°C			PUR[1]	PUR connection cable
K10HTF[1]	Accuracy 10 mm / -40 ... 200°C			RAD[1]	Radox connection cable
K10HT[1]	Accuracy 10 mm / -40 ... 250°C				
K15[1]	Accuracy 15 mm / -30 ... 130°C				
K15HTF[1]	Accuracy 15 mm / -40 ... 200°C				
K15HT[1]	Accuracy 15 mm / -40 ... 250°C				
K1[1]	Accuracy 0.2 mm / -40 ... 125°C				
K1HT[1]	Accuracy 0.2 mm / -40 ... 250°C				

Code 4

	Key 7 (only for connection cable) ... / ... / ... / ... / ... / ... / ... / ... - **Connection cable option**		Key 8 ... / ... / ... / ... / ... / ... / ... / ... - **Approvals level transmitter**
KA[1]	Shielded	EXIAG	Acc. to Exia, atmosphere gas
KB[1]	Shielded / oil-resistant	EXIAGD	Acc. to Exia, atmosphere gas and dust
KC[1]	Shielded / oil-resistant / halogen-free	EXDG[1]	Acc. to Exd, atmosphere gas
KD[1]	Oil-resistant	EXDGD[1]	Acc. to Exd, atmosphere gas and dust
KE[1]	Oil-resistant / halogen-free	EXIADG[1]	Acc. to Exia and Exd, atmosphere gas
KF[1]	Halogen-free	EXIADGD[1]	Acc. to Exia and Exd, atmosphere gas and dust

Example

8	9	10	11	12	13	14	Code
1 -	1 / 2 / 3 -	1 / 2 / 3 / 4 / 5 / 6 / 7 -	1 / 2 / 3 -	1 -	1 / 2 -	1 / 2 / 3	**Key**
-	MRB / SV -	3 / BGU / N / 1 / SIL / EXIAG -	USV / 98 -	60 -	-	EX / PEDII	**Example**

Black = not possible according to Atex / Blue = possible according to Atex Exia / Blue[1] = possible according to Atex Exia and Exd / Black[1] = possible according to Atex Exd

Heinrich Kübler AG
Ruessenstrasse 4 | CH-6340 Baar | Phone +41 (0)41 766 62 62 | Fax +41 (0)41 766 62 63 | E-Mail info@kubler.ch | Internet www.kubler.ch

Code 5

	Key 1 ... - **Electrical connection position of the level transmitter**
DO[1]	Electrical connection top mounted
DU[1]	Electrical connection bottom mounted

Code 6

	Key 1 ... / ... - **Length of instrument**		Key 2 ... / ... - **Display indication range**
L...[1]	Length of instrument in mm	A...[1]	Display indication range in mm

Code 7

	Key 1 ... / ... / ... - **Chamber material quality**		Key 2 ... / ... / ... - **Chamber outside diameter**		Key 3 ... / ... / ... - **Chamber wall thickness**
V[1]	Stainless steel	60[1]	Ø 60.30 mm	...[1]	Chamber wall thickness in mm
VP[1]	Stainless steel electropolished / Ra ca. 0,8µm	61[1]	Ø 60.33 mm		(see the relevant catalog page)
	(not attestable)	63	Ø 63.00 mm		
TI[1]	Titanium				
HC[1]	Alloy C				
MO[1]	6Mo				
VEEC[1]	Stainless steel ECTFE coated				
VPFA[1]	Stainless steel PFA coated				
P	PVC				
PP	Polypropylene				
PF	PVDF				

Code 8

	Key 1 ... - **Chamber additional design**
DK[1]	Differential compensated

Example

Code	**1**		**2**		**3**						**4**														**5**		**6**				**7**				
Key	1	-	1	-	1.1	/	1.2	/	1.3	-	1	/	2	/	3	/	4	/	5	/	6	/	7	/	8	-	1	-	1	/	2	-	1	/	2	/	3	-
Example	UMG	-	FE	-	25	/	16	/	B1	-	ALF	/	TP43B	/	V	/	K5	/							EXIAG	-	DU	-	L...	/	A...	-	V	/	60	/	2	-

Black = not possible according to Atex / Blue = possible according to Atex Exia / Blue[1] = possible according to Atex Exia and Exd / Black[1] = possible according to Atex Exd

Heinrich Kübler AG
Ruessenstrasse 4 | CH-6340 Baar | Phone +41 (0)41 766 62 62 | Fax +41 (0)41 766 62 63 | E-Mail info@kubler.ch | Internet www.kubler.ch

Code 9

	Key 1 ... / ... / ... - **Magnetic roller indicator**		Key 2 ... / ... / ... - **Scale**		Key 3 ... / ... / ... - **Mag. roller indicator sight extension**
MRA	Magnetic roller indicator MRA	SAK	Scale in Aluminium with adhesive foil	PV[1]	Acryl glass extension
MRB[1]	Magnetic roller indicator MRB (Ex)	SA0[1]	Scale in Aluminium without engraving		
MRAN	Mag. roller indicator MRAN over-roll-protected	SA1[1]	Scale in Aluminium with engraving in %		
MRBN[1]	Mag. roller indicator MRBN over-roll-prot. (Ex)	SA2[1]	Scale in Aluminium with engraving in cm		
MRK[1]	Magnetic roller indicator MRK	SA3[1]	Scale in Aluminium with engraving in inch.		
MNA	Magnetic roller indicator MNA	SA4[1]	Scale in Aluminium with engraving acc. to customized table		
MNB[1]	Magnetic roller indicator MNB (Ex)	SV0[1]	Scale in Stainless steel without engraving		
MNAN	Magnetic roller indicator MNAN over-roll-prot.	SV1[1]	Scale in Stainless steel with engraving in %		
MNBN[1]	Mag. roller indicator MNBN over-roll-prot. (Ex)	SV2[1]	Scale in Stainless steel with engraving in cm		
MNAV	Magnetic roller indicator MNAV	SV3[1]	Scale in Stainless steel with engraving in inch.		
MNBV[1]	Magnetic roller indicator MNBV (Ex)	SV4[1]	Scale in Stainless steel with engraving acc. to customized table		
MNAVN	Magnetic roller indicator MNAVN over-roll-protected				
MNBVN[1]	Magnetic roller indicator MNBVN over-roll-prot. (Ex)				
MNKV[1]	Magnetic roller indicator MNKV				

Code 10

	Key 1 ... / ... / ... / ... / ... / ... / ... - **Number of magnetic switches**		Key 2 ... / ... / ... / ... / ... / ... / ... - **Magnetic switch**		Key 3 ... / ... / ... / ... / ... / ... / ... - **Magnetic switch option**
...	Number of magnetic switches	BGU	Magnetic switch BGU	R22[1]	Switch protective circuit with 22 ohm / 0.21 W resistor
		BGUD[1]	Magnetic switch BGU	N[1]	Switch protective circuit according to NAMUR EN 60947
		BGUALE	Magnetic switch BGUALE		
		BGUASQ	Magnetic switch BGUASQ		
		BGUASMA	Magnetic switch BGUASMA		
		ALFU	Magnetic switch ALFU		
		ALFI	Magnetic switch ALFI (inductive)		
		ALEU	Magnetic switch ALEU		
		APAVU	Magnetic switch APAVU		
		APBVU	Magnetic switch APBVU		
		RU60	Magnetic switch RU60		
		RUV60	Magnetic switch RUV60		
		RUVD60	Magnetic switch RUVD60		
		ALDAU[1]	Magnetic switch ALDAU		

Code 10

	Key 4 ... / ... / ... / ... / ... / ... / ... - **Length of cable**		Key 5 ... / ... / ... / ... / ... / ... / ... - **Connection cable**		Key 6 ... / ... / ... / ... / ... / ... / ... - **Connection cable option**
...	Length of cable in meter	PVC[1]	PVC connection cable	KA[1]	Shielded
		PVCB[1]	PVC connection cable with blue coating	KB[1]	Shielded / oil-resistant
		SIL[1]	Silicone connection cable	KC[1]	Shielded / oil-resistant / halogen-free
		PUR[1]	PUR connection cable	KD[1]	Oil-resistant
		RAD[1]	Radox connection cable	KE[1]	Oil-resistant / halogen-free
				KF[1]	Halogen-free

Example

8	9	10	11	12	13	14	Code
1 -	1 / 2 / 3 -	1 / 2 / 3 / 4 / 5 / 6 / 7 -	1 / 2 / 3 -	1 -	1 / 2 -	1 / 2 / 3	**Key**
-	MRB / SV -	3 / BGU / N / 1 / SIL / EXIAG -	USV / 98 -	60 -	-	EX / PEDII	**Example**

Black = not possible according to Atex / Blue = possible according to Atex Exia / Blue[1] = possible according to Atex Exia and Exd / Black[1] = possible according to Atex Exd

Heinrich Kübler AG
Ruessenstrasse 4 | CH-6340 Baar | Phone +41 (0)41 766 62 62 | Fax +41 (0)41 766 62 63 | E-Mail info@kubler.ch | Internet www.kubler.ch

Code 10

	Key 7 … / … / … / … / … / … / … - **Approvals magnetic switch**
EXIAG	Acc. to Exia, atmosphere gas
EXIAGD	Acc. to Exia, atmosphere gas and dust
EXDG[1]	Acc. to Exd, atmosphere gas
EXDGD[1]	Acc. to Exd, atmosphere gas and dust
EXIADG[1]	Acc. to Exia and Exd, atmosphere gas
EXIADGD[1]	Acc. to Exia and Exd, atmosphere gas and dust

Code 11

	Key 1 … / … / … - **Float**		Key 2 … / … / … - **Diameter**		Key 3 … / … / … - **Float length**
USV[1]	Float in Stainless steel (Key 3 not applicable)	…	Acc. to float table on page 348 - 363	…	Acc. to float table on page 348 - 363
UZVS[1]	Float in Stainless steel				
UZTIS[1]	Float in Titanium				
UZTIEECS[1]	Float in Titanium E-CTFE coated				
UZTIPFAS[1]	Float in Titanium PFA coated				
UZPS	Float in PVC (on request)				
UZPPS	Float in Polypropylene (on request)				
UZPFS	Float in PVDF (on request)				

Code 12

	Key 1 … - **Stilling well**
60[1]	Ø 60.30 mm
73[1]	Ø 73.03 mm
88[1]	Ø 88.90 mm
114[1]	Ø 114.30 mm

Code 13

	Key 1 … / … - **Instrument isolation**		Key 2 … / … - **Electrical heat tracing**
AIT	Armaflex isolation AIT	H75A	Electrical heat tracing 75°C
AHT	Armaflex isolation AHT	H75B	Electrical heat tracing 75°C acc. to EExe
SW	Rock-wool isolation	H150A	Electrical heat tracing 150°C
		H150B	Electrical heat tracing 150°C acc. to EExe

Code 14

	Key 1 … / … / … - **Approvals / 1**		Key 2 … / … / … - **Approvals / 2**		Key 3 … / … / … - **Approvals / 3**
EX	Acc. to Ex	PEDII[1]	Acc. to PED97/23/EC category II	EAC1[1]	Approval EAC TR CU 004/2011 & 012/2011 & 020/2011
		PEDIV[1]	Acc. to PED97/23/EC category IV		

Example

Code	1		2		3						4										5		6				7				
Key	1	-	1	-	1.1	/	1.2	/	1.3	-	1	/	2	/	3	/	4	/	5	/	6	/	7	/	8	-	1	-	1	/	2	-	1	/	2	/	3	-
Example	UMG	-	FE	-	25	/	16	/	B1	-	ALF	/	TP43B	/	V	/	K5	/							EXIAG	-	DU	-	L…	/	A…	-	V	/	60	/	2	-

Black = not possible according to Atex / Blue = possible according to Atex Exia / Blue[1] = possible according to Atex Exia and Exd / Black[1] = possible according to Atex Exd

Heinrich Kübler AG
Ruessenstrasse 4 | CH-6340 Baar | Phone +41 (0)41 766 62 62 | Fax +41 (0)41 766 62 63 | E-Mail info@kubler.ch | Internet www.kubler.ch

Notes

Example

8	9	10	11	12	13	14	Code
1 -	1 / 2 / 3 -	1 / 2 / 3 / 4 / 5 / 6 / 7 -	1 / 2 / 3 -	1 -	1 / 2 -	1 / 2 / 3	**Key**
-	MRB / SV -	3 / BGU / N / 1 / SIL / EXIAG -	USV / 98 -	60 -	-	EX / PEDII	**Example**

Black = not possible according to Atex / Blue = possible according to Atex Exia / Blue[1] = possible according to Atex Exia and Exd / Black[1] = possible according to Atex Exd

Type **UNA-..-../../..-L..-V/60/..-MR..-UZ..S/..**

Material quality:	1.4404 / 1.4435 / 1.4571 (316L / 316Ti)
Length of instrument:	400 ... 6000 mm
Specific gravity:	≥ 400 kg/m³
Design pressure:	-1 bar ... 16 bar
Design temperature:	-10°C ... 400°C (optional -196°C)

Design

Chamber:	Ø 60.30 x 2.00 mm
Process connection:	Type key page 332
Chamber end top:	Tube cap
Chamber end bottom:	-
Float:	Page 351 - 359

Option magnetic roller indicator / Page 364

Aluminium or Stainless steel / Pocan	-40°C ... 200°C
Aluminium or Stainless steel / Ceramic	-40°C ... 400°C
Maximum indicating range:	A = L - float length - (F)

Option scale / Page 365

Aluminium / Stainless steel	With adhesive foil / Engraving / Blank

Option magnetic switch / Page 372 - 378

Aluminium / Stainless steel	-60°C ... 300°C

Option level transmitter / Page 366 - 370

Accuracy / Reed contacts:	5 / 10 / 15 mm
Accuracy / Magnetostrictive:	0.2 mm
Control unit:	- Programmable - Hart-programmable / SIL2 - Profibus PA - Foundation Fieldbus

Option electrical heat tracing / Page 380

Holding temperature:	~10°C / Frost protection

Option instrument isolation / Page 380 - 381

Isolation:	Armaflex isolation / Rock-wool isolation

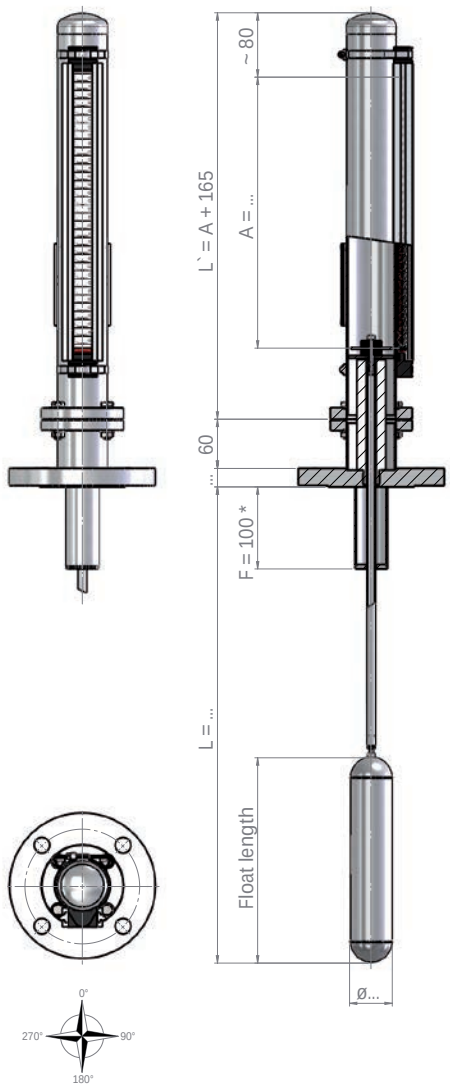

* If instrument length L > 1000 mm guidance tube to be used

Approvals / Certificates

ATEX*

II 1/2G c IIC T6 - T1 II 2D c IIC T6 - T1

Liquid temperature Ex max. 300°C

The top mounted level indicator are based on a modular design and can be arranged individually.
Type key page 332 - 336

* = The approval is dependent on the equipment combination

Heinrich Kübler AG
Ruessenstrasse 4 | CH-6340 Baar | Phone +41 (0)41 766 62 62 | Fax +41 (0)41 766 62 63 | E-Mail info@kubler.ch | Internet www.kubler.ch

Type **UNA-..-../../..-L..-V/60/..-MR..-UZ..S/..-..**

Material quality:	1.4404 / 1.4435 / 1.4571 (316L / 316Ti)
Length of instrument:	400 ... 6000 mm
Specific gravity:	≥ 400 kg/m³
Design pressure:	-1 bar ... 16 bar
Design temperature:	-10°C ... 400°C (optional -196°C)

Design

Chamber:	Ø 60.30 x 2.00 mm
Stilling well:	Type key page 336
Process connection:	Type key page 332
Chamber end top:	Tube cap
Chamber end bottom:	-
Float:	Page 351 - 359

Option magnetic roller indicator / Page 364

Aluminium or Stainless steel / Pocan	-40°C ... 200°C
Aluminium or Stainless steel / Ceramic	-40°C ... 400°C
Maximum indicating range:	A = L - float length

Option scale / Page 365

Aluminium / Stainless steel	With adhesive foil / Engraving / Blank

Option magnetic switch / Page 372 - 378

Aluminium / Stainless steel	-60°C ... 300°C

Option level transmitter / Page 366 - 370

Accuracy / Reed contacts:	5 / 10 / 15 mm
Accuracy / Magnetostrictive:	0.2 mm
Control unit:	- Programmable - Hart-programmable / SIL2 - Profibus PA - Foundation Fieldbus

Option electrical heat tracing / Page 380

Holding temperature:	~10°C / Frost protection

Option instrument isolation / Page 380 - 381

Isolation:	Armaflex isolation / Rock-wool isolation

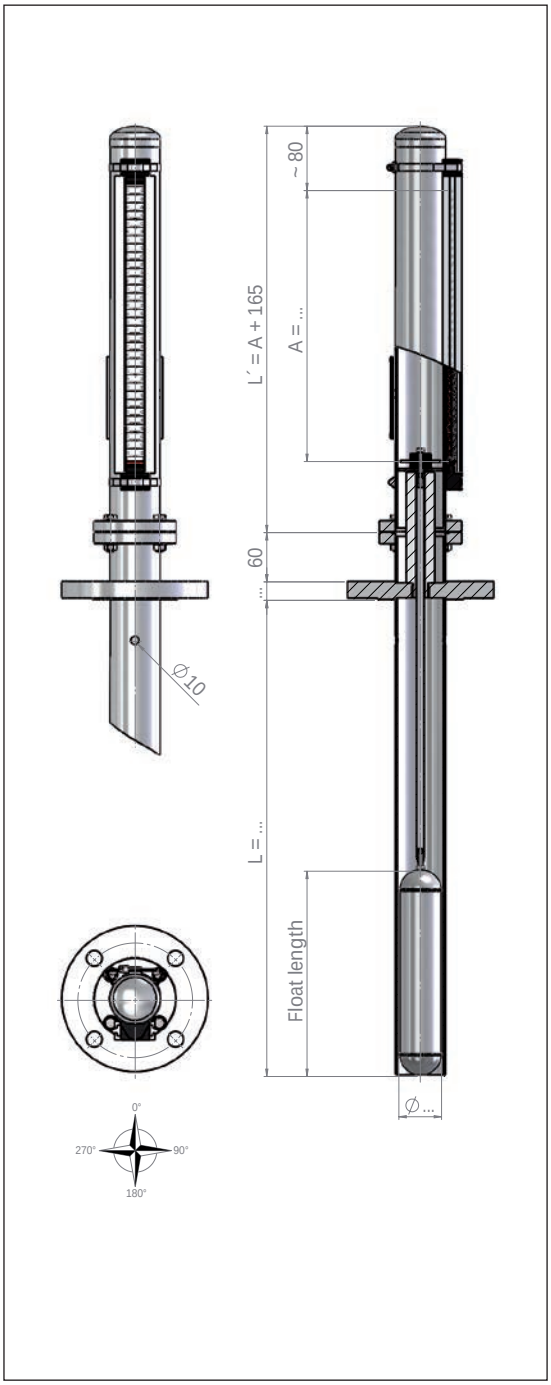

Approvals / Certificates

ATEX*

II 1/2G c IIC T6 - T1 II 2D c IIC T6 - T1

Liquid temperature Ex max. 300°C

The top mounted level indicator are based on a modular design and can be arranged individually.
Type key page 332 - 336

* = The approval is dependent on the equipment combination

Heinrich Kübler AG
Ruessenstrasse 4 | CH-6340 Baar | Phone +41 (0)41 766 62 62 | Fax +41 (0)41 766 62 63 | E-Mail info@kubler.ch | Internet www.kubler.ch

Type **UNA-..-../../..-L..-V/60/..-MR..-USV/..**

Material quality:	1.4404 / 1.4435 / 1.4571 (316L / 316Ti)
Length of instrument:	400 ... 6000 mm
Specific gravity:	≥ 300 kg/m³
Design pressure:	-1 bar ... 16 bar
Design temperature:	-10°C ... 400°C (optional -196°C)

Design

Chamber:	Ø 60.30 x 2.00 mm
Process connection:	Type key page 332
Chamber end top:	Tube cap
Chamber end bottom:	-
Float:	Page 348 - 350

Option magnetic roller indicator / Page 364

Aluminium or Stainless steel / Pocan	-40°C ... 200°C
Aluminium or Stainless steel / Ceramic	-40°C ... 400°C
Maximum indicating range:	A = L - float length - (F)

Option scale / Page 365

Aluminium / Stainless steel	With adhesive foil / Engraving / Blank

Option magnetic switch / Page 372 - 378

Aluminium / Stainless steel	-60°C ... 300°C

Option level transmitter / Page 366 - 370

Accuracy / Reed contacts:	5 / 10 / 15 mm
Accuracy / Magnetostrictive:	0.2 mm
Control unit:	- Programmable - Hart-programmable / SIL2 - Profibus PA - Foundation Fieldbus

Option electrical heat tracing / Page 380

Holding temperature:	~10°C / Frost protection

Option instrument isolation / Page 380 - 381

Isolation:	Armaflex isolation / Rock-wool isolation

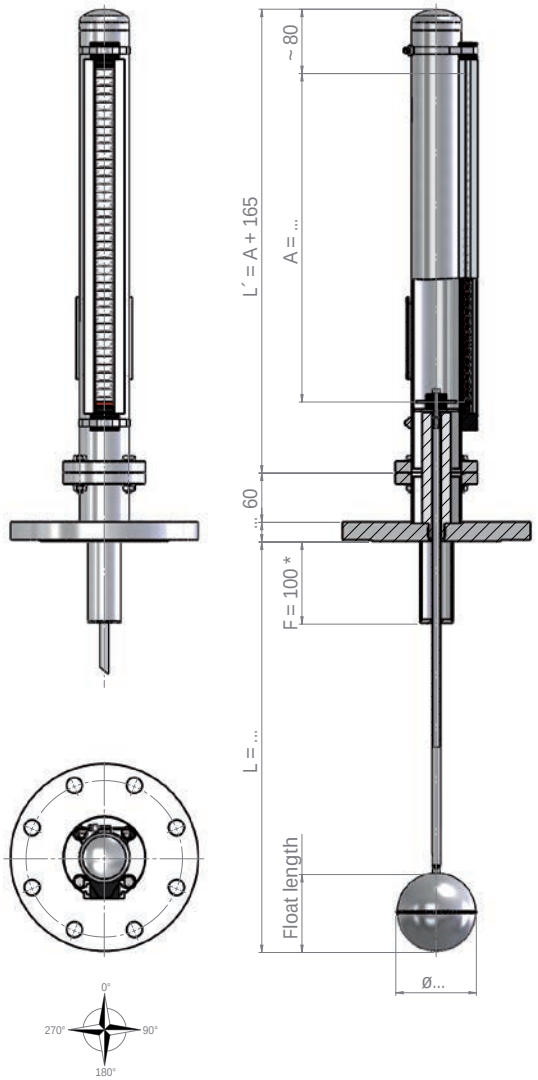

* If instrument length L > 1000 mm guidance tube to be used

Approvals / Certificates

ATEX*

II 1/2G c IIC T6 - T1 II 2D c IIC T6 - T1

Liquid temperature Ex max. 300°C

The top mounted level indicator are based on a modular design and can be arranged individually.
Type key page 332 - 336

* = The approval is dependent on the equipment combination

Heinrich Kübler AG
Ruessenstrasse 4 | CH-6340 Baar | Phone +41 (0)41 766 62 62 | Fax +41 (0)41 766 62 63 | E-Mail info@kubler.ch | Internet www.kubler.ch

Type **UNA-..-../../..-L..-V/60/..-MR..-USV/..-SR114**

Material quality:	1.4404 / 1.4435 / 1.4571 (316L / 316Ti)
Length of instrument:	400 ... 6000 mm
Specific gravity:	≥ 300 kg/m³
Design pressure:	-1 bar ... 16 bar
Design temperature:	-10°C ... 400°C (optional -196°C)

Design

Chamber:	Ø 60.30 x 2.00 mm
Stilling well:	Type key page 336
Process connection:	Type key page 332
Chamber end top:	Tube cap
Chamber end bottom:	-
Float:	Page 348 - 350

Option magnetic roller indicator / Page 364

Aluminium or Stainless steel / Pocan	-40°C ... 200°C
Aluminium or Stainless steel / Ceramic	-40°C ... 400°C
Maximum indicating range:	A = L - float length

Option scale / Page 365

Aluminium / Stainless steel	With adhesive foil / Engraving / Blank

Option magnetic switch / Page 372 - 378

Aluminium / Stainless steel	-60°C ... 300°C

Option level transmitter / Page 366 - 370

Accuracy / Reed contacts:	5 / 10 / 15 mm
Accuracy / Magnetostrictive:	0.2 mm
Control unit:	- Programmable - Hart-programmable / SIL2 - Profibus PA - Foundation Fieldbus

Option electrical heat tracing / Page 380

Holding temperature:	~10°C / Frost protection

Option instrument isolation / Page 380 - 381

Isolation:	Armaflex isolation / Rock-wool isolation

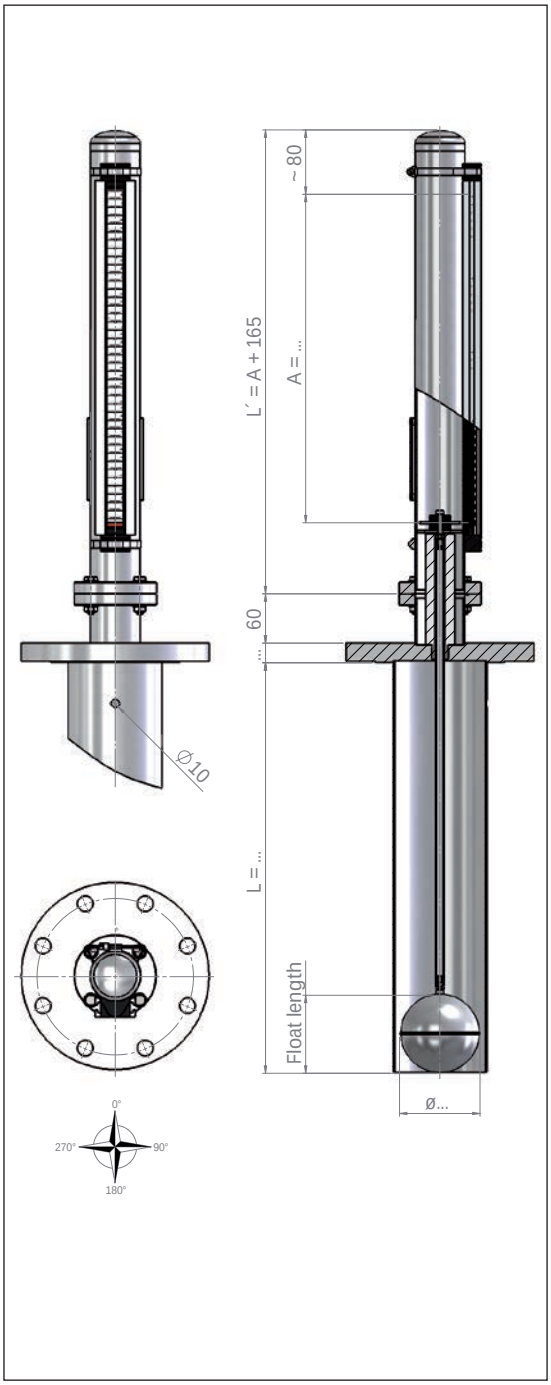

Approvals / Certificates

ATEX*

II 1/2G c IIC T6 - T1 II 2D c IIC T6 - T1

Liquid temperature Ex max. 300°C

The top mounted level indicator are based on a modular design and can be arranged individually.
Type key page 332 - 336

* = The approval is dependent on the equipment combination

Heinrich Kübler AG
Ruessenstrasse 4 | CH-6340 Baar | Phone +41 (0)41 766 62 62 | Fax +41 (0)41 766 62 63 | E-Mail info@kubler.ch | Internet www.kubler.ch

Type **UNA-..-../../..-L..-V/60/..-DK-MR..-UZ..S/..**

Material quality:	1.4404 / 1.4435 / 1.4571 (316L / 316Ti)
Length of instrument:	400 ... 20000 mm
Specific gravity:	≥ 300 kg/m³
Design pressure:	-1 bar ... 16 - 100 bar
Design temperature:	-10°C ... 400°C (optional -196°C)

Design

Chamber:	Ø 60.30 x 2.00 mm Ø 76.10 x .. mm
Process connection:	Type key page 332
Chamber end top:	Flanged connection with tube cap
Chamber end bottom:	-
Float:	Acc. to protocol

Option magnetic roller indicator / Page 364

Aluminium or Stainless steel / Pocan	-40°C ... 200°C
Aluminium or Stainless steel / Ceramic	-40°C ... 400°C
Maximum indicating range:	A = L - float length - (F)

Option scale / Page 365

Aluminium / Stainless steel	With adhesive foil / Engraving / Blank

Option magnetic switch / Page 372 - 378

Aluminium / Stainless steel	-60°C ... 300°C

Option level transmitter / Page 366 - 370

Accuracy / Reed contacts:	5 / 10 / 15 mm
Accuracy / Magnetostrictive:	0.2 mm
Control unit:	- Programmable - Hart-programmable / SIL2 - Profibus PA - Foundation Fieldbus

Option electrical heat tracing / Page 380

Holding temperature:	~10°C / Frost protection

Option instrument isolation / Page 380 - 381

Isolation:	Armaflex isolation / Rock-wool isolation

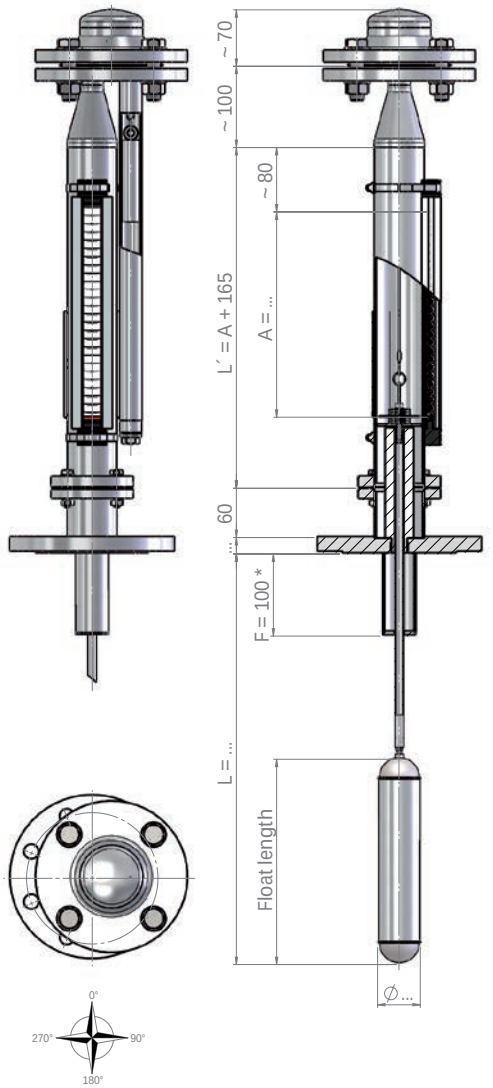

* If instrument length L > 1000 mm guidance tube to be used

Approvals / Certificates

ATEX*

II 1/2G c IIC T6 - T1 II 2D c IIC T6 - T1

Liquid temperature Ex max. 300°C

The top mounted level indicator are based on a modular design and can be arranged individually.
Type key page 332 - 336

* = The approval is dependent on the equipment combination

Heinrich Kübler AG
Ruessenstrasse 4 | CH-6340 Baar | Phone +41 (0)41 766 62 62 | Fax +41 (0)41 766 62 63 | E-Mail info@kubler.ch | Internet www.kubler.ch

Type **UNA-..-../../..-L..-P/63/..-MR..-UZPS/..**

Material quality:	PVC
Length of instrument:	400 ... 5000 mm
Specific gravity:	≥ 800 kg/m³
Design pressure:	-1 bar ... 4 bar
Design temperature:	-15°C ... 40°C

Design

Chamber:	Ø 63.00 x 3.00 mm
Process connection:	Type key page 332
Chamber end top:	Screwed connection
Chamber end bottom:	-
Float:	Acc. to calculation

Option magnetic roller indicator / Page 364

Aluminium or Stainless steel / Pocan	-40°C ... 200°C
Aluminium or Stainless steel / Ceramic	-40°C ... 400°C
Maximum indicating range:	A = L - float length - 20

Option scale / Page 365

Aluminium / Stainless steel	With adhesive foil / Engraving / Blank

Option magnetic switch / Page 372 - 378

Aluminium / Stainless steel	-60°C ... 300°C

Option level transmitter / Page 366 - 370

Accuracy / Reed contacts:	5 / 10 / 15 mm
Accuracy / Magnetostrictive:	0.2 mm
Control unit:	- Programmable - Hart-programmable / SIL2 - Profibus PA - Foundation Fieldbus

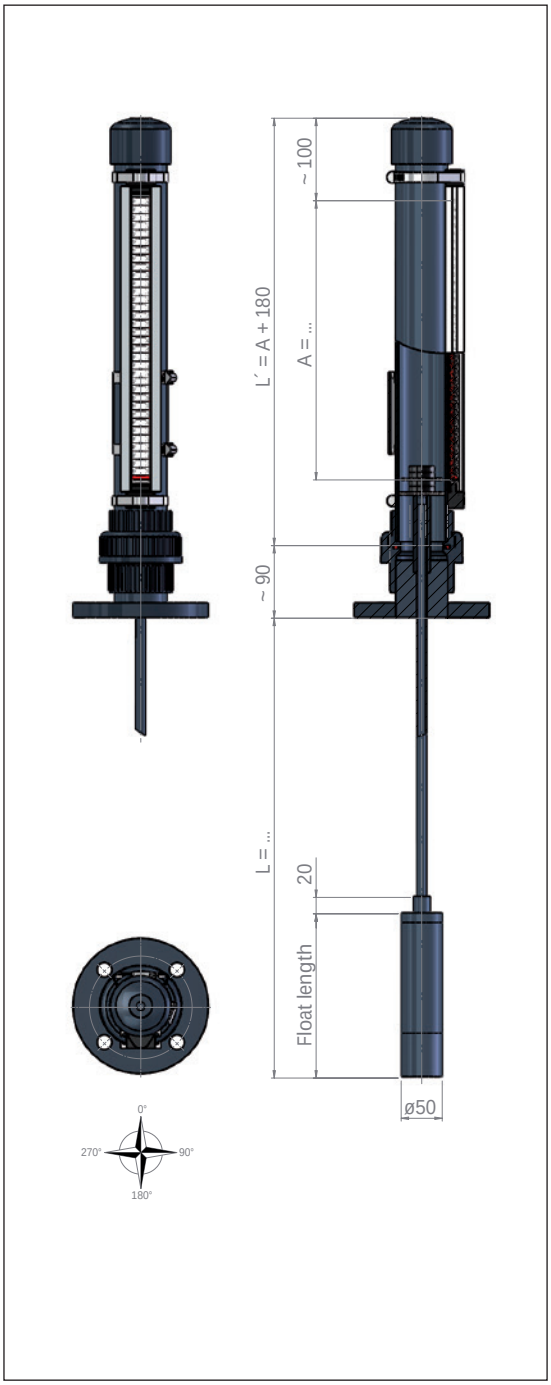

Approvals / Certificates

The top mounted level indicator are based on a modular design and can be arranged individually.
Type key page 332 - 336

Heinrich Kübler AG
Ruessenstrasse 4 | CH-6340 Baar | Phone +41 (0)41 766 62 62 | Fax +41 (0)41 766 62 63 | E-Mail info@kubler.ch | Internet www.kubler.ch

Type **UNA-..-../../..-L..-PP/63/..-MR..-UZPPS/..**

Material quality:	Polypropylene
Length of instrument:	300 ... 4000 mm
Specific gravity:	≥ 800 kg/m³
Design pressure:	-1 bar ... 4 bar
Design temperature:	-10°C ... 60°C

Design

Chamber:	Ø 63.00 x 3.6 mm
Process connection:	Type key page 332
Chamber end top:	Screwed connection
Chamber end bottom:	-
Float:	Acc. to calculation

Option magnetic roller indicator / Page 364

Aluminium or Stainless steel / Pocan	-40°C ... 200°C
Aluminium or Stainless steel / Ceramic	-40°C ... 400°C
Maximum indicating range:	A = L - float length - 20

Option scale / Page 365

Aluminium / Stainless steel	With adhesive foil / Engraving / Blank

Option magnetic switch / Page 372 - 378

Aluminium / Stainless steel	-60°C ... 300°C

Option level transmitter / Page 366 - 370

Accuracy / Reed contacts:	5 / 10 / 15 mm
Accuracy / Magnetostrictive:	0.2 mm
Control unit:	- Programmable - Hart-programmable / SIL2 - Profibus PA - Foundation Fieldbus

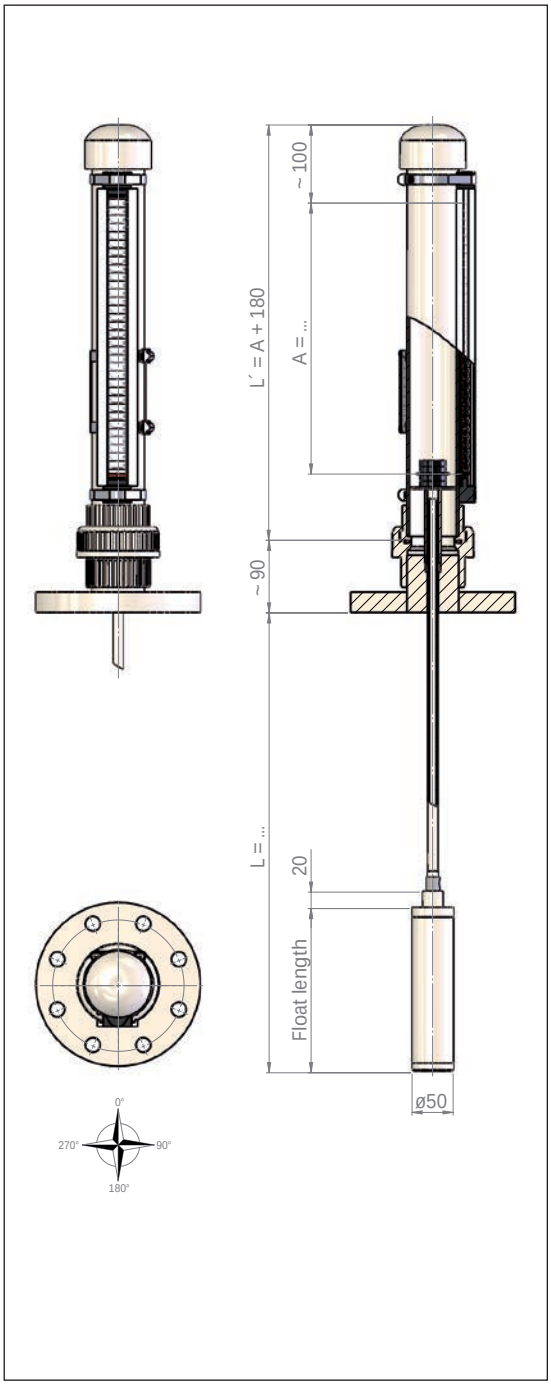

Approvals / Certificates

The top mounted level indicator are based on a modular design and can be arranged individually.
Type key page 332 - 336

Heinrich Kübler AG
Ruessenstrasse 4 | CH-6340 Baar | Phone +41 (0)41 766 62 62 | Fax +41 (0)41 766 62 63 | E-Mail info@kubler.ch | Internet www.kubler.ch

Type **UNA-..-../../..-L..-PF/63/..-MR..-UZPFS/..**

Material quality:	PVDF
Length of instrument:	300 ... 4000 mm
Specific gravity:	≥ 800 kg/m³
Design pressure:	-1 bar ... 4 bar
Design temperature:	-10°C ... 80°C

Design

Chamber:	Ø 63.00 x 3.00 mm
Process connection:	Type key page 332
Chamber end top:	Screwed connection
Chamber end bottom:	-
Float:	Acc. to calculation

Option magnetic roller indicator / Page 364

Aluminium or Stainless steel / Pocan	-40°C ... 200°C
Aluminium or Stainless steel / Ceramic	-40°C ... 400°C
Maximum indicating range:	A = L - float length - 20

Option scale / Page 365

Aluminium / Stainless steel	With adhesive foil / Engraving / Blank

Option magnetic switch / Page 372 - 378

Aluminium / Stainless steel	-60°C ... 300°C

Option level transmitter / Page 366 - 370

Accuracy / Reed contacts:	5 / 10 / 15 mm
Accuracy / Magnetostrictive:	0.2 mm
Control unit:	- Programmable - Hart-programmable / SIL2 - Profibus PA - Foundation Fieldbus

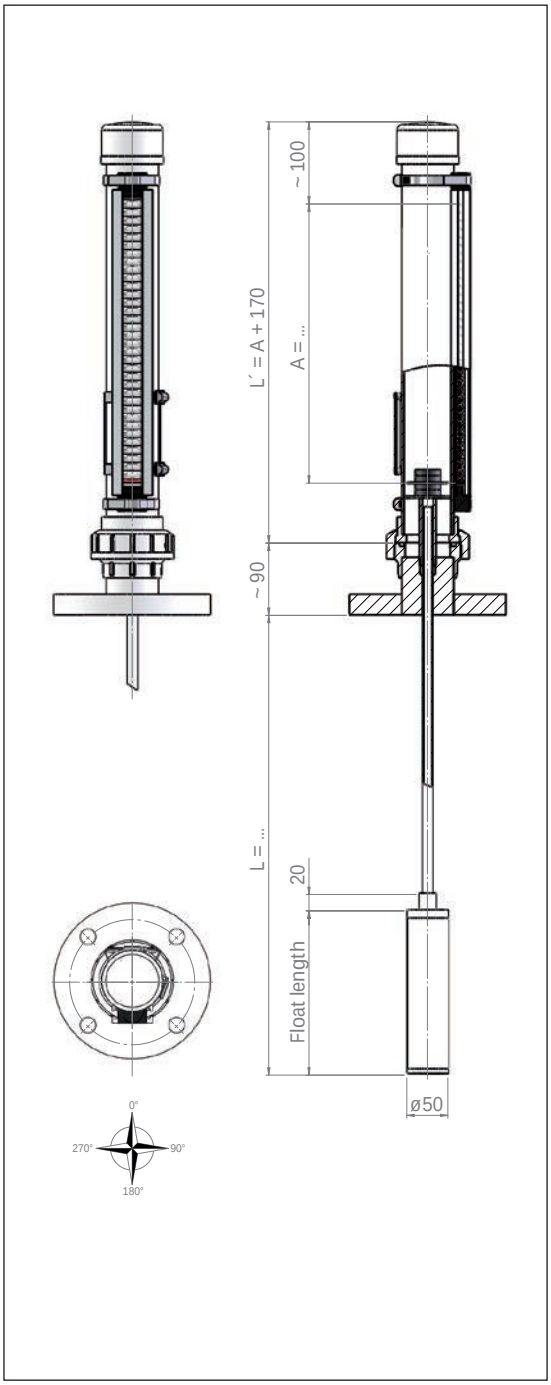

Approvals / Certificates

The top mounted level indicator are based on a modular design and can be arranged individually.
Type key page 332 - 336

Heinrich Kübler AG
Ruessenstrasse 4 | CH-6340 Baar | Phone +41 (0)41 766 62 62 | Fax +41 (0)41 766 62 63 | E-Mail info@kubler.ch | Internet www.kubler.ch

Type **UNA-..-../../..-L..-VEEC/60/..-MR..-UZVEECS/..**

Material quality:	Stainless steel ECTFE coated
Length of instrument:	400 ... 3000 mm
Specific gravity:	≥ 400 kg/m³
Design pressure:	-1 bar ... 16 bar
Design temperature:	-10°C ... 150°C

Design

Chamber:	Ø 60.30 x 2.00 mm
Process connection:	Type key page 332
Chamber end top:	Flanged connection
Chamber end bottom:	-
Float:	Page 360 - 361

Option magnetic roller indicator / Page 364

Aluminium or Stainless steel / Pocan	-40°C ... 200°C
Aluminium or Stainless steel / Ceramic	-40°C ... 400°C
Maximum indicating range:	A = L - float length

Option scale / Page 365

Aluminium / Stainless steel	With adhesive foil / Engraving / Blank

Option magnetic switch / Page 372 - 378

Aluminium / Stainless steel	-60°C ... 300°C

Option level transmitter / Page 366 - 370

Accuracy / Reed contacts:	5 / 10 / 15 mm
Accuracy / Magnetostrictive:	0.2 mm
Control unit:	- Programmable - Hart-programmable / SIL2 - Profibus PA - Foundation Fieldbus

Option electrical heat tracing / Page 380

Holding temperature:	~10°C / Frost protection

Option instrument isolation / Page 380 - 381

Isolation:	Armaflex isolation / Rock-wool isolation

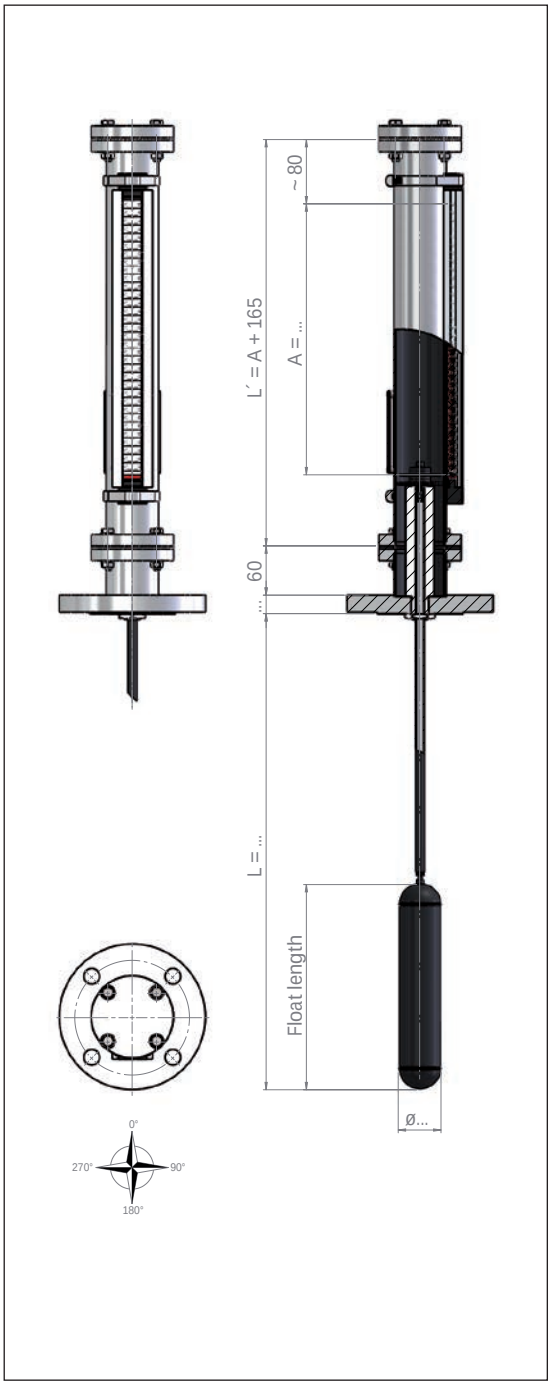

Approvals / Certificates

ATEX*

II 1/2G c IIC T6 - T1 II 2D c IIC T6 - T1

Liquid temperature Ex max. 150°C

The top mounted level indicator are based on a modular design and can be arranged individually.
Type key page 332 - 336

* = The approval is dependent on the equipment combination

Heinrich Kübler AG
Ruessenstrasse 4 | CH-6340 Baar | Phone +41 (0)41 766 62 62 | Fax +41 (0)41 766 62 63 | E-Mail info@kubler.ch | Internet www.kubler.ch

Type **UNA-..-../../..-L..-VPFA/60/..-MR..-UZVPFAS/..**

Material quality:	Stainless steel PFA coated
Length of instrument:	400 ... 3000 mm
Specific gravity:	≥ 400 kg/m³
Design pressure:	-1 bar ... 16 bar
Design temperature:	-10°C ... 250°C

Design

Chamber:	Ø 60.30 x 2.00 mm
Process connection:	Type key page 332
Chamber end top:	Flanged connection
Chamber end bottom:	-
Float:	Page 362 - 363

Option magnetic roller indicator / Page 364

Aluminium or Stainless steel / Pocan	-40°C ... 200°C
Aluminium or Stainless steel / Ceramic	-40°C ... 400°C
Maximum indicating range:	A = L - float length

Option scale / Page 365

Aluminium / Stainless steel	With adhesive foil / Engraving / Blank

Option magnetic switch / Page 372 - 378

Aluminium / Stainless steel	-60°C ... 300°C

Option level transmitter / Page 366 - 370

Accuracy / Reed contacts:	5 / 10 / 15 mm
Accuracy / Magnetostrictive:	0.2 mm
Control unit:	- Programmable - Hart-programmable / SIL2 - Profibus PA - Foundation Fieldbus

Option electrical heat tracing / Page 380

Holding temperature:	~10°C / Frost protection

Option instrument isolation / Page 380 - 381

Isolation:	Armaflex isolation / Rock-wool isolation

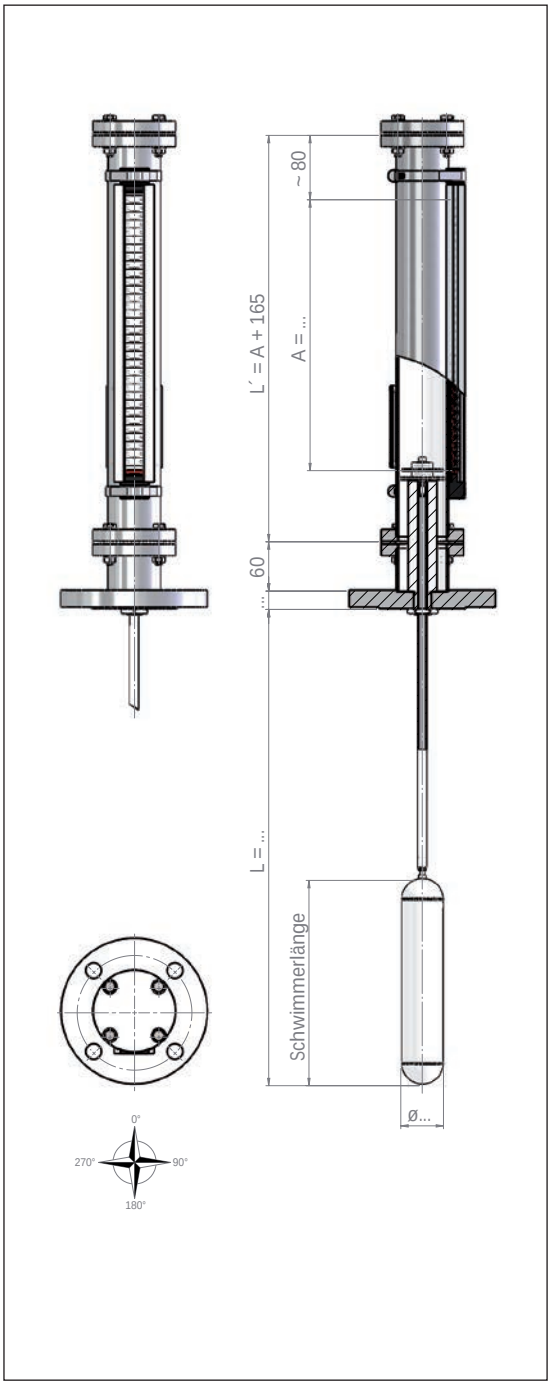

Approvals / Certificates

ATEX*

II 1/2G c IIC T6 - T1 II 2D c IIC T6 - T1

Liquid temperature Ex max. 250°C

The top mounted level indicator are based on a modular design and can be arranged individually.
Type key page 332 - 336

* = The approval is dependent on the equipment combination

Heinrich Kübler AG
Ruessenstrasse 4 | CH-6340 Baar | Phone +41 (0)41 766 62 62 | Fax +41 (0)41 766 62 63 | E-Mail info@kubler.ch | Internet www.kubler.ch

Ball float **USV/98** **Stainless steel 1.4571 (316Ti)**

Diameter / hight [mm]:	98 / 95
Design temperature [°C]:	-196 ... 200
Design pressure [bar]:	-1 ... 16
Weight [g]:	180
Flange min.:	DN 100

Float USV/98													
Specific gravity of the liquid [kg/m³]	**300**	**400**	**500**	**600**	**700**	**800**	**900**	**1000**	**1100**	**1200**	**1300**	**1400**	**1500**
L-Measure [mm]	Immersion depth [%]												
400¹	-	-	-	-	-	-	80	70	65	60	60	55	55
500¹	-	-	-	-	-	-	85	75	70	65	60	55	55
600¹	-	-	-	-	-	-	-	75	70	65	60	60	55
700¹	-	-	-	-	-	-	-	80	70	65	60	60	55
800¹	-	-	-	-	-	-	-	80	75	70	65	60	55
900¹	-	-	-	-	-	-	-	85	75	70	65	60	60
1000¹	-	-	-	-	-	-	-	-	80	70	65	65	60
1100²	-	-	-	-	-	-	-	-	-	-	-	80	75
1200²	-	-	-	-	-	-	-	-	-	-	-	85	80
1300²	-	-	-	-	-	-	-	-	-	-	-	-	80
1400²	-	-	-	-	-	-	-	-	-	-	-	-	85
1500²	-	-	-	-	-	-	-	-	-	-	-	-	-

Ball float **USV/105** **Stainless steel 1.4571 (316Ti)**

Diameter / hight [mm]:	105 / 102
Design temperature [°C]:	-196 ... 200
Design pressure [bar]:	-1 ... 25
Weight [g]:	257
Flange min.:	DN 100

Float USV/105													
Specific gravity of the liquid [kg/m³]	**300**	**400**	**500**	**600**	**700**	**800**	**900**	**1000**	**1100**	**1200**	**1300**	**1400**	**1500**
L-Measure [mm]	Immersion depth [%]												
400¹	-	-	-	-	-	-	80	70	65	60	55	55	50
500¹	-	-	-	-	-	-	80	70	65	60	55	55	55
600¹	-	-	-	-	-	-	85	75	70	65	60	55	55
700¹	-	-	-	-	-	-	-	75	70	65	60	55	55
800¹	-	-	-	-	-	-	-	80	70	65	60	60	55
900¹	-	-	-	-	-	-	-	80	70	65	65	60	55
1000¹	-	-	-	-	-	-	-	80	75	70	65	60	55
1100²	-	-	-	-	-	-	-	-	-	-	80	75	70
1200²	-	-	-	-	-	-	-	-	-	-	85	75	70
1300²	-	-	-	-	-	-	-	-	-	-	-	80	75
1400²	-	-	-	-	-	-	-	-	-	-	-	80	75
1500²	-	-	-	-	-	-	-	-	-	-	-	85	80

The top mounted level indicator are based on a modular design and can be arranged individually.
Type key page 332 - 336

¹ = Guidance rod 10 x 0.5 mm / ² = Guidance rod 10 x 1.0 mm / ³ = Guidance rod 16 x 1.0 mm

Heinrich Kübler AG
Ruessenstrasse 4 | CH-6340 Baar | Phone +41 (0)41 766 62 62 | Fax +41 (0)41 766 62 63 | E-Mail info@kubler.ch | Internet www.kubler.ch

Ball float **USV/120** **Stainless steel 1.4571 (316Ti)**

Diameter / hight [mm]:	120 / 116
Design temperature [°C]:	-196 ... 200
Design pressure [bar]:	-1 ... 16
Weight [g]:	220
Flange min.:	DN 125

Float USV/120													
Specific gravity of the liquid [kg/m³]	**300**	**400**	**500**	**600**	**700**	**800**	**900**	**1000**	**1100**	**1200**	**1300**	**1400**	**1500**
L-Measure [mm]	Immersion depth [%]												
400¹	-	-	-	70	65	55	55	50	45	45	40	40	40
500¹	-	-	-	75	65	60	55	50	45	45	40	40	40
600¹	-	-	-	75	65	60	55	50	50	45	45	40	40
700¹	-	-	-	80	70	60	55	50	50	45	45	40	40
800¹	-	-	-	80	70	65	55	55	50	45	45	45	40
900¹	-	-	-	85	70	65	60	55	50	50	45	45	40
1000¹	-	-	-	-	75	65	60	55	50	50	45	45	40
1100²	-	-	-	-	-	85	75	65	60	60	55	50	50
1200²	-	-	-	-	-	-	75	70	65	60	55	55	50
1300²	-	-	-	-	-	-	80	70	65	60	55	55	50
1400²	-	-	-	-	-	-	80	75	65	60	60	55	55
1500²	-	-	-	-	-	-	85	75	70	65	60	55	55
1600²	-	-	-	-	-	-	-	80	70	65	60	60	55
1700²	-	-	-	-	-	-	-	80	75	70	65	60	55
1800²	-	-	-	-	-	-	-	85	75	70	65	60	60
1900²	-	-	-	-	-	-	-	-	80	70	65	65	60
2000²	-	-	-	-	-	-	-	-	80	75	70	65	60

The top mounted level indicator are based on a modular design and can be arranged individually.
Type key page 332 - 336

¹ = Guidance rod 10 x 0.5 mm / ² = Guidance rod 10 x 1.0 mm / ³ = Guidance rod 16 x 1.0 mm

Ball float **USV/205** **Stainless steel 1.4571 (316Ti)**

Diameter / hight [mm]:	205 / 200
Design temperature [°C]:	-196 ... 200
Design pressure [bar]:	-1 ... 6
Weight [g]:	788
Flange min.:	DN 200

Float USV/205													
Specific gravity of the liquid [kg/m³]	**300**	**400**	**500**	**600**	**700**	**800**	**900**	**1000**	**1100**	**1200**	**1300**	**1400**	**1500**
L-Measure [mm]	Immersion depth [%]												
400¹	70	55	45	40	40	35	35	30	30	30	25	25	25
600¹	70	55	50	45	40	35	35	30	30	30	25	25	25
800¹	70	55	50	45	40	35	35	30	30	30	25	25	25
1000¹	75	60	50	45	40	35	35	30	30	30	30	25	25
1200²	85	65	55	50	45	40	35	35	35	30	30	30	30
1400²	-	65	55	50	45	40	40	35	35	30	30	30	30
1600²	-	70	55	50	45	40	40	35	35	35	30	30	30
1800²	-	70	60	50	45	45	40	35	35	35	30	30	30
2000²	-	70	60	55	45	45	40	40	35	35	35	30	30
2200³	-	-	75	65	55	50	45	45	40	40	40	35	35
2400³	-	-	75	65	60	55	50	45	45	40	40	35	35
2600³	-	-	80	65	60	55	50	45	45	40	40	40	35
2800³	-	-	85	70	60	55	50	50	45	45	40	40	35
3000³	-	-	-	70	65	55	55	50	45	45	40	40	40
3200³	-	-	-	75	65	60	55	50	45	45	40	40	40
3400³	-	-	-	75	65	60	55	50	50	45	45	40	40
3600³	-	-	-	80	70	60	55	55	50	45	45	40	40
3800³	-	-	-	85	70	65	60	55	50	50	45	45	40
4000³	-	-	-	-	75	65	60	55	50	50	45	45	40
4200³	-	-	-	-	75	65	60	55	55	50	45	45	45
4400³	-	-	-	-	80	70	60	60	55	50	50	45	45
4600³	-	-	-	-	80	70	65	60	55	50	50	45	45
4800³	-	-	-	-	85	70	65	60	55	55	50	50	45
5000³	-	-	-	-	-	75	65	60	55	55	50	50	45

The top mounted level indicator are based on a modular design and can be arranged individually.
Type key page 332 - 336

¹ = Guidance rod 10 x 0.5 mm / ² = Guidance rod 10 x 1.0 mm / ³ = Guidance rod 16 x 1.0 mm

Heinrich Kübler AG
Ruessenstrasse 4 | CH-6340 Baar | Phone +41 (0)41 766 62 62 | Fax +41 (0)41 766 62 63 | E-Mail info@kubler.ch | Internet www.kubler.ch

Cylindrical float **UZVS/52/200** **Stainless steel 1.4571 (316Ti)**

Diameter / length [mm]:	52 / 200
Design temperature [°C]:	-196 ... 250
Design pressure [bar]:	-1 ... 16
Weight [g]:	154
Flange min.:	DN 50

Float UZVS/52/200

Specific gravity of the liquid [kg/m³]	300	400	500	600	700	800	900	1000	1100	1200	1300	1400	1500
L-Measure [mm]	Immersion depth [%]												
400¹	-	-	-	-	-	-	-	-	80	75	65	65	60
500¹	-	-	-	-	-	-	-	-	-	75	70	65	60
600¹	-	-	-	-	-	-	-	-	-	80	70	65	65
700¹	-	-	-	-	-	-	-	-	-	80	75	70	65
800¹	-	-	-	-	-	-	-	-	-	-	75	70	65
900¹	-	-	-	-	-	-	-	-	-	-	80	75	70
1000¹	-	-	-	-	-	-	-	-	-	-	-	75	70
1100²	-	-	-	-	-	-	-	-	-	-	-	-	-
1200²	-	-	-	-	-	-	-	-	-	-	-	-	-
1300²	-	-	-	-	-	-	-	-	-	-	-	-	-
1400²	-	-	-	-	-	-	-	-	-	-	-	-	-
1500²	-	-	-	-	-	-	-	-	-	-	-	-	-

Cylindrical float **UZVS/52/250** **Stainless steel 1.4571 (316Ti)**

Diameter / length [mm]:	52 / 250
Design temperature [°C]:	-196 ... 250
Design pressure [bar]:	-1 ... 16
Weight [g]:	191
Flange min.:	DN 50

Float UZVS/52/250

Specific gravity of the liquid [kg/m³]	300	400	500	600	700	800	900	1000	1100	1200	1300	1400	1500
L-Measure [mm]	Immersion depth [%]												
400¹	-	-	-	-	-	-	85	75	70	65	60	55	50
500¹	-	-	-	-	-	-	-	80	70	65	60	55	55
600¹	-	-	-	-	-	-	-	80	75	70	65	60	55
700¹	-	-	-	-	-	-	-	85	75	70	65	60	55
800¹	-	-	-	-	-	-	-	-	80	70	65	60	60
900¹	-	-	-	-	-	-	-	-	80	75	70	65	60
1000¹	-	-	-	-	-	-	-	-	80	75	70	65	60
1100²	-	-	-	-	-	-	-	-	-	-	-	80	75
1200²	-	-	-	-	-	-	-	-	-	-	-	-	80
1300²	-	-	-	-	-	-	-	-	-	-	-	-	85
1400²	-	-	-	-	-	-	-	-	-	-	-	-	-
1500²	-	-	-	-	-	-	-	-	-	-	-	-	-

The top mounted level indicator are based on a modular design and can be arranged individually.
Type key page 332 - 336

¹ = Guidance rod 10 x 0.5 mm / ² = Guidance rod 10 x 1.0 mm / ³ = Guidance rod 16 x 1.0 mm

Cylindrical float **UZVS/52/350** **Stainless steel 1.4571 (316Ti)**

Diameter / length [mm]:	52 / 350
Design temperature [°C]:	-196 ... 250
Design pressure [bar]:	-1 ... 16
Weight [g]:	270
Flange min.:	DN 50

Float UZVS/52/350													
Specific gravity of the liquid [kg/m³]	**300**	**400**	**500**	**600**	**700**	**800**	**900**	**1000**	**1100**	**1200**	**1300**	**1400**	**1500**
L-Measure [mm]	Immersion depth [%]												
400¹	-	-	-	-	-	80	70	65	60	55	50	45	45
500¹	-	-	-	-	-	80	70	65	60	55	50	45	45
600¹	-	-	-	-	-	85	75	65	60	55	50	50	45
700¹	-	-	-	-	-	85	75	70	65	60	55	50	45
800¹	-	-	-	-	-	-	80	70	65	60	55	50	50
900¹	-	-	-	-	-	-	80	70	65	60	55	50	50
1000¹	-	-	-	-	-	-	80	75	70	60	60	55	50
1100²	-	-	-	-	-	-	-	-	80	75	70	65	60
1200²	-	-	-	-	-	-	-	-	85	80	70	65	65
1300²	-	-	-	-	-	-	-	-	-	80	75	70	65
1400²	-	-	-	-	-	-	-	-	-	85	75	70	65
1500²	-	-	-	-	-	-	-	-	-	85	80	75	70
1600²	-	-	-	-	-	-	-	-	-	-	80	75	70
1700²	-	-	-	-	-	-	-	-	-	-	85	80	75
1800²	-	-	-	-	-	-	-	-	-	-	85	80	75
1900²	-	-	-	-	-	-	-	-	-	-	-	85	80
2000²	-	-	-	-	-	-	-	-	-	-	-	85	80

Cylindrical float **UZVS/62/250** **Stainless steel 1.4571 (316Ti)**

Diameter / length [mm]:	62 / 250
Design temperature [°C]:	-196 ... 200
Design pressure [bar]:	-1 ... 6
Weight [g]:	174
Flange min.:	DN 65

Float UZVS/62/250													
Specific gravity of the liquid [kg/m³]	**300**	**400**	**500**	**600**	**700**	**800**	**900**	**1000**	**1100**	**1200**	**1300**	**1400**	**1500**
L-Measure [mm]	Immersion depth [%]												
400¹	-	-	-	-	70	65	55	50	45	45	40	40	35
500¹	-	-	-	-	75	65	60	55	50	45	40	40	35
600¹	-	-	-	-	75	70	60	55	50	45	45	40	40
700¹	-	-	-	-	80	70	65	55	50	50	45	40	40
800¹	-	-	-	-	-	70	65	60	55	50	45	45	40
900¹	-	-	-	-	-	75	65	60	55	50	45	45	40
1000¹	-	-	-	-	-	75	70	60	55	50	50	45	45
1100²	-	-	-	-	-	-	-	80	70	65	60	55	55
1200²	-	-	-	-	-	-	-	-	75	70	65	60	55
1300²	-	-	-	-	-	-	-	-	75	70	65	60	60
1400²	-	-	-	-	-	-	-	-	80	75	70	65	60
1500²	-	-	-	-	-	-	-	-	-	75	70	65	60
1600²	-	-	-	-	-	-	-	-	-	80	75	70	65
1700²	-	-	-	-	-	-	-	-	-	-	75	70	65
1800²	-	-	-	-	-	-	-	-	-	-	80	75	70
1900²	-	-	-	-	-	-	-	-	-	-	80	75	70
2000²	-	-	-	-	-	-	-	-	-	-	-	80	75

The top mounted level indicator are based on a modular design and can be arranged individually.
Type key page 332 - 336

¹ = Guidance rod 10 x 0.5 mm / ² = Guidance rod 10 x 1.0 mm / ³ = Guidance rod 16 x 1.0 mm

Heinrich Kübler AG
Ruessenstrasse 4 | CH-6340 Baar | Phone +41 (0)41 766 62 62 | Fax +41 (0)41 766 62 63 | E-Mail info@kubler.ch | Internet www.kubler.ch

Cylindrical float **UZVS/72/250** **Stainless steel 1.4571 (316Ti)**

Diameter / length [mm]:	72 / 250
Design temperature [°C]:	-196 ... 200
Design pressure [bar]:	-1 ... 10
Weight [g]:	325
Flange min.:	DN 80

Float UZVS/72/250

Specific gravity of the liquid [kg/m³]	300	400	500	600	700	800	900	1000	1100	1200	1300	1400	1500
L-Measure [mm]	Immersion depth [%]												
400¹	-	-	-	-	75	70	60	55	50	45	45	40	40
500¹	-	-	-	-	80	70	60	55	50	50	45	40	40
600¹	-	-	-	-	80	70	65	60	55	50	45	45	40
700¹	-	-	-	-	-	75	65	60	55	50	45	45	40
800¹	-	-	-	-	-	75	65	60	55	50	50	45	40
900¹	-	-	-	-	-	75	70	60	55	50	50	45	45
1000¹	-	-	-	-	-	75	70	65	60	55	50	45	45
1100²	-	-	-	-	-	-	-	75	70	65	60	55	50
1200²	-	-	-	-	-	-	-	75	70	65	60	55	55
1300²	-	-	-	-	-	-	-	80	75	65	60	60	55
1400²	-	-	-	-	-	-	-	-	75	70	65	60	55
1500²	-	-	-	-	-	-	-	-	75	70	65	60	60
1600²	-	-	-	-	-	-	-	-	80	75	70	65	60
1700²	-	-	-	-	-	-	-	-	80	75	70	65	60
1800²	-	-	-	-	-	-	-	-	-	75	70	65	65
1900²	-	-	-	-	-	-	-	-	-	80	75	70	65
2000²	-	-	-	-	-	-	-	-	-	80	75	70	65

Cylindrical float **UZVS/82/250** **Stainless steel 1.4571 (316Ti)**

Diameter / length [mm]:	82 / 250
Design temperature [°C]:	-196 ... 200
Design pressure [bar]:	-1 ... 16
Weight [g]:	370
Flange min.:	DN 100

Float UZVS/82/250

Specific gravity of the liquid [kg/m³]	300	400	500	600	700	800	900	1000	1100	1200	1300	1400	1500
L-Measure [mm]	Immersion depth [%]												
400¹	-	-	-	75	65	60	50	50	45	40	40	35	35
500¹	-	-	-	80	65	60	55	50	45	40	40	35	35
600¹	-	-	-	80	70	60	55	50	45	40	40	35	35
700¹	-	-	-	80	70	60	55	50	45	45	40	40	35
800¹	-	-	-	-	70	65	55	50	45	45	40	40	35
900¹	-	-	-	-	75	65	60	55	50	45	40	40	35
1000¹	-	-	-	-	75	65	60	55	50	45	40	40	35
1100²	-	-	-	-	-	75	70	65	60	55	50	45	45
1200²	-	-	-	-	-	80	70	65	60	55	50	50	45
1300²	-	-	-	-	-	80	75	65	60	55	50	50	45
1400²	-	-	-	-	-	-	75	70	60	60	55	50	45
1500²	-	-	-	-	-	-	75	70	65	60	55	50	50
1600²	-	-	-	-	-	-	80	70	65	60	55	55	50
1700²	-	-	-	-	-	-	80	75	65	60	60	55	50
1800²	-	-	-	-	-	-	-	75	70	65	60	55	50
1900²	-	-	-	-	-	-	-	75	70	65	60	55	55
2000²	-	-	-	-	-	-	-	80	70	65	60	60	55

The top mounted level indicator are based on a modular design and can be arranged individually.
Type key page 332 - 336

¹ = Guidance rod 10 x 0.5 mm / ² = Guidance rod 10 x 1.0 mm / ³ = Guidance rod 16 x 1.0 mm

Cylindrical float **UZVS/82/300** **Stainless steel 1.4571 (316Ti)**

Diameter / length [mm]:	82 / 300
Design temperature [°C]:	-196 ... 200
Design pressure [bar]:	-1 ... 16
Weight [g]:	450
Flange min.:	DN 100

Float UZVS/82/300													
Specific gravity of the liquid [kg/m³]	**300**	**400**	**500**	**600**	**700**	**800**	**900**	**1000**	**1100**	**1200**	**1300**	**1400**	**1500**
L-Measure [mm]	Immersion depth [%]												
400¹	-	-	-	70	60	55	50	45	40	40	35	35	30
500¹	-	-	-	75	65	55	50	45	40	40	35	35	30
600¹	-	-	-	75	65	55	50	45	40	40	35	35	30
700¹	-	-	-	75	65	60	50	45	45	40	35	35	35
800¹	-	-	-	75	65	60	55	50	45	40	40	35	35
900¹	-	-	-	80	70	60	55	50	45	40	40	35	35
1000¹	-	-	-	80	70	60	55	50	45	40	40	35	35
1100²	-	-	-	-	80	70	65	55	50	50	45	40	40
1200²	-	-	-	-	80	70	65	60	55	50	45	45	40
1300²	-	-	-	-	85	75	65	60	55	50	45	45	40
1400²	-	-	-	-	-	75	70	60	55	50	50	45	40
1500²	-	-	-	-	-	75	70	65	60	55	50	45	45
1600²	-	-	-	-	-	80	70	65	60	55	50	45	45
1700²	-	-	-	-	-	80	75	65	60	55	50	50	45
1800²	-	-	-	-	-	85	75	65	60	55	55	50	45
1900²	-	-	-	-	-	-	75	70	65	60	55	50	45
2000²	-	-	-	-	-	-	80	70	65	60	55	50	50

The top mounted level indicator are based on a modular design and can be arranged individually.
Type key page 332 - 336

¹ = Guidance rod 10 x 0.5 mm / ² = Guidance rod 10 x 1.0 mm / ³ = Guidance rod 16 x 1.0 mm

Heinrich Kübler AG
Ruessenstrasse 4 | CH-6340 Baar | Phone +41 (0)41 766 62 62 | Fax +41 (0)41 766 62 63 | E-Mail info@kubler.ch | Internet www.kubler.ch

Cylindrical float **UZTIS/52/200** **Titanium**

Diameter / length [mm]:	52 / 200
Design temperature [°C]:	-30 ... 150
Design pressure [bar]:	-1 ... 16
Weight [g]:	109
Flange min.:	DN 50

Float UZTIS/52/200

Specific gravity of the liquid [kg/m³]	300	400	500	600	700	800	900	1000	1100	1200	1300	1400	1500
L-Measure [mm]	Immersion depth [%]												
400	-	-	-	-	-	-	80	75	65	60	55	55	50
500	-	-	-	-	-	-	-	75	70	65	60	55	50
600	-	-	-	-	-	-	-	80	70	65	60	60	55
700	-	-	-	-	-	-	-	80	75	70	65	60	55
800	-	-	-	-	-	-	-	-	75	70	65	60	55
900	-	-	-	-	-	-	-	-	80	75	70	65	60
1000	-	-	-	-	-	-	-	-	-	75	70	65	60
1100	-	-	-	-	-	-	-	-	-	-	-	-	80
1200	-	-	-	-	-	-	-	-	-	-	-	-	-
1300	-	-	-	-	-	-	-	-	-	-	-	-	-
1400	-	-	-	-	-	-	-	-	-	-	-	-	-
1500	-	-	-	-	-	-	-	-	-	-	-	-	-

Cylindrical float **UZTIS/52/250** **Titanium**

Diameter / length [mm]:	52 / 250
Design temperature [°C]:	-30 ... 150
Design pressure [bar]:	-1 ... 16
Weight [g]:	138
Flange min.:	DN 50

Float UZTIS/52/250

Specific gravity of the liquid [kg/m³]	300	400	500	600	700	800	900	1000	1100	1200	1300	1400	1500
L-Measure [mm]	Immersion depth [%]												
400	-	-	-	-	85	80	70	65	55	55	50	45	45
500	-	-	-	-	-	80	70	65	60	55	50	50	45
600	-	-	-	-	-	80	75	70	60	55	55	50	45
700	-	-	-	-	-	85	75	70	65	60	55	50	50
800	-	-	-	-	-	-	80	70	65	60	55	55	50
900	-	-	-	-	-	-	85	75	70	65	60	55	50
1000	-	-	-	-	-	-	-	75	70	65	60	55	50
1100	-	-	-	-	-	-	-	-	-	-	80	75	70
1200	-	-	-	-	-	-	-	-	-	-	80	75	70
1300	-	-	-	-	-	-	-	-	-	-	-	80	75
1400	-	-	-	-	-	-	-	-	-	-	-	80	75
1500	-	-	-	-	-	-	-	-	-	-	-	85	80

The top mounted level indicator are based on a modular design and can be arranged individually.
Type key page 332 - 336

[1] = Guidance rod 10 x 0.5 mm / [2] = Guidance rod 10 x 1.0 mm / [3] = Guidance rod 16 x 1.0 mm

Cylindrical float **UZTIS/52/350** **Titanium**

Diameter / length [mm]:	52 / 350
Design temperature [°C]:	-30 ... 150
Design pressure [bar]:	-1 ... 16
Weight [g]:	193
Flange min.:	DN 50

Float UZTIS/52/350													
Specific gravity of the liquid [kg/m³]	**300**	**400**	**500**	**600**	**700**	**800**	**900**	**1000**	**1100**	**1200**	**1300**	**1400**	**1500**
L-Measure [mm]	Immersion depth [%]												
400¹	-	-	-	85	70	65	55	50	45	45	40	35	35
500¹	-	-	-	85	75	65	60	55	50	45	40	40	35
600¹	-	-	-	85	75	65	60	55	50	45	40	40	35
700¹	-	-	-	85	80	70	60	55	50	45	45	40	40
800¹	-	-	-	-	80	70	65	60	55	50	45	40	40
900¹	-	-	-	-	85	75	65	60	55	50	45	45	40
1000¹	-	-	-	-	85	75	70	60	55	50	50	45	40
1100²	-	-	-	-	-	-	85	75	70	65	60	55	50
1200²	-	-	-	-	-	-	-	80	70	65	60	55	55
1300²	-	-	-	-	-	-	-	80	75	70	65	60	55
1400²	-	-	-	-	-	-	-	85	80	70	65	60	60
1500²	-	-	-	-	-	-	-	-	80	75	70	65	60
1600²	-	-	-	-	-	-	-	-	85	75	70	65	60
1700²	-	-	-	-	-	-	-	-	85	80	75	70	65
1800²	-	-	-	-	-	-	-	-	-	80	75	70	65
1900²	-	-	-	-	-	-	-	-	-	85	80	75	70
2000²	-	-	-	-	-	-	-	-	-	-	80	75	70

Cylindrical float **UZTIS/76/200** **Titanium**

Diameter / length [mm]:	76 / 200
Design temperature [°C]:	-30 ... 150
Design pressure [bar]:	-1 ... 1
Weight [g]:	148
Flange min.:	DN 80

Float UZTIS/76/200													
Specific gravity of the liquid [kg/m³]	**300**	**400**	**500**	**600**	**700**	**800**	**900**	**1000**	**1100**	**1200**	**1300**	**1400**	**1500**
L-Measure [mm]	Immersion depth [%]												
400¹	-	-	-	65	60	50	45	40	40	35	35	30	30
500¹	-	-	-	70	60	55	50	45	40	35	35	35	30
600¹	-	-	-	70	60	55	50	45	40	40	35	35	30
700¹	-	-	-	75	65	55	50	45	45	40	35	35	35
800¹	-	-	-	75	65	60	50	50	45	40	40	35	35
900¹	-	-	-	75	65	60	55	50	45	40	40	35	35
1000¹	-	-	-	80	70	60	55	50	45	45	40	40	35
1100²	-	-	-	-	-	-	70	65	60	55	50	50	45
1200²	-	-	-	-	-	-	75	65	60	55	55	50	45
1300²	-	-	-	-	-	-	75	70	65	60	55	50	50
1400²	-	-	-	-	-	-	-	70	65	60	55	55	50
1500²	-	-	-	-	-	-	-	75	70	65	60	55	50
1600²	-	-	-	-	-	-	-	-	70	65	60	55	55
1700²	-	-	-	-	-	-	-	-	75	65	65	60	55
1800²	-	-	-	-	-	-	-	-	75	70	65	60	55
1900²	-	-	-	-	-	-	-	-	-	70	65	60	60
2000²	-	-	-	-	-	-	-	-	-	75	70	65	60

The top mounted level indicator are based on a modular design and can be arranged individually.
Type key page 332 - 336

¹ = Guidance rod 10 x 0.5 mm / ² = Guidance rod 10 x 1.0 mm / ³ = Guidance rod 16 x 1.0 mm

Heinrich Kübler AG
Ruessenstrasse 4 | CH-6340 Baar | Phone +41 (0)41 766 62 62 | Fax +41 (0)41 766 62 63 | E-Mail info@kubler.ch | Internet www.kubler.ch

Cylindrical float **UZTIS/76/250** **Titanium**

Diameter / length [mm]:	76 / 250
Design temperature [°C]:	-30 ... 150
Design pressure [bar]:	-1 ... 1
Weight [g]:	186
Flange min.:	DN 80

Float UZTIS/76/250													
Specific gravity of the liquid [kg/m³]	**300**	**400**	**500**	**600**	**700**	**800**	**900**	**1000**	**1100**	**1200**	**1300**	**1400**	**1500**
L-Measure [mm]	Immersion depth [%]												
400¹	-	-	70	60	50	45	40	35	35	30	30	30	25
500¹	-	-	70	60	50	45	45	40	35	30	30	30	25
600¹	-	-	75	60	55	45	45	40	35	35	30	30	30
700¹	-	-	75	65	55	50	45	40	35	35	30	30	30
800¹	-	-	75	65	55	50	45	40	40	35	35	30	30
900¹	-	-	80	65	60	50	45	40	40	35	35	30	30
1000¹	-	-	80	70	60	55	45	45	40	35	35	30	30
1100²	-	-	-	-	75	65	60	55	50	45	40	40	35
1200²	-	-	-	-	75	70	60	55	50	45	45	40	40
1300²	-	-	-	-	80	70	65	60	55	50	45	45	40
1400²	-	-	-	-	-	75	65	60	55	50	45	45	40
1500²	-	-	-	-	-	75	70	60	55	50	50	45	45
1600²	-	-	-	-	-	80	70	65	60	55	50	45	45
1700²	-	-	-	-	-	80	75	65	60	55	50	50	45
1800²	-	-	-	-	-	-	75	70	60	60	55	50	45
1900²	-	-	-	-	-	-	75	70	65	60	55	50	50
2000²	-	-	-	-	-	-	80	70	65	60	55	55	50
2100³	-	-	-	-	-	-	-	-	-	-	80	75	70
2200³	-	-	-	-	-	-	-	-	-	-	-	75	70
2300³	-	-	-	-	-	-	-	-	-	-	-	80	75
2400³	-	-	-	-	-	-	-	-	-	-	-	-	75
2500³	-	-	-	-	-	-	-	-	-	-	-	-	80
2600³	-	-	-	-	-	-	-	-	-	-	-	-	80

The top mounted level indicator are based on a modular design and can be arranged individually.
Type key page 332 - 336

¹ = Guidance rod 10 x 0.5 mm / ² = Guidance rod 10 x 1.0 mm / ³ = Guidance rod 16 x 1.0 mm

Heinrich Kübler AG
Ruessenstrasse 4 | CH-6340 Baar | Phone +41 (0)41 766 62 62 | Fax +41 (0)41 766 62 63 | E-Mail info@kubler.ch | Internet www.kubler.ch

Cylindrical float **UZTIS/76/300** **Titanium**

Diameter / length [mm]:	76 / 300
Design temperature [°C]:	-30 ... 150
Design pressure [bar]:	-1 ... 1
Weight [g]:	218
Flange min.:	DN 80

Float UZTIS/76/300													
Specific gravity of the liquid [kg/m³]	**300**	**400**	**500**	**600**	**700**	**800**	**900**	**1000**	**1100**	**1200**	**1300**	**1400**	**1500**
L-Measure [mm]	Immersion depth [%]												
400¹	-	75	60	50	45	40	35	30	30	30	25	25	25
500¹	-	75	65	55	45	40	35	35	30	30	25	25	25
600¹	-	80	65	55	45	40	40	35	30	30	25	25	25
700¹	-	80	65	55	50	45	40	35	30	30	30	25	25
800¹	-	85	70	55	50	45	40	35	35	30	30	25	25
900¹	-	-	70	60	50	45	40	35	35	30	30	30	25
1000¹	-	-	70	60	50	45	40	40	35	30	30	30	25
1100²	-	-	-	75	65	55	50	45	40	40	35	35	30
1200²	-	-	-	75	65	60	55	50	45	40	40	35	35
1300²	-	-	-	80	70	60	55	50	45	40	40	35	35
1400²	-	-	-	85	70	65	55	50	45	45	40	40	35
1500²	-	-	-	-	75	65	60	55	50	45	40	40	35
1600²	-	-	-	-	75	65	60	55	50	45	45	40	40
1700²	-	-	-	-	80	70	60	55	50	50	45	40	40
1800²	-	-	-	-	80	70	65	60	55	50	45	45	40
1900²	-	-	-	-	85	75	65	60	55	50	45	45	40
2000²	-	-	-	-	-	75	70	60	55	50	50	45	40
2100³	-	-	-	-	-	-	-	-	80	75	65	65	60
2200³	-	-	-	-	-	-	-	-	80	75	70	65	60
2300³	-	-	-	-	-	-	-	-	85	75	70	65	65
2400³	-	-	-	-	-	-	-	-	-	80	75	70	65
2500³	-	-	-	-	-	-	-	-	-	80	75	70	65
2600³	-	-	-	-	-	-	-	-	-	85	80	75	70
2700³	-	-	-	-	-	-	-	-	-	-	80	75	70
2800³	-	-	-	-	-	-	-	-	-	-	85	75	70
2900³	-	-	-	-	-	-	-	-	-	-	-	80	75
3000³	-	-	-	-	-	-	-	-	-	-	-	80	75
3100³	-	-	-	-	-	-	-	-	-	-	-	85	80
3200³	-	-	-	-	-	-	-	-	-	-	-	-	80
3300³	-	-	-	-	-	-	-	-	-	-	-	-	80

The top mounted level indicator are based on a modular design and can be arranged individually.
Type key page 332 - 336

¹ = Guidance rod 10 x 0.5 mm / ² = Guidance rod 10 x 1.0 mm / ³ = Guidance rod 16 x 1.0 mm

Heinrich Kübler AG
Ruessenstrasse 4 | CH-6340 Baar | Phone +41 (0)41 766 62 62 | Fax +41 (0)41 766 62 63 | E-Mail info@kubler.ch | Internet www.kubler.ch

Cylindrical float **UZTIS/76/350** **Titanium**

Diameter / length [mm]:	76 / 350
Design temperature [°C]:	-30 ... 150
Design pressure [bar]:	-1 ... 1
Weight [g]:	258
Flange min.:	DN 80

Float UZTIS/76/350													
Specific gravity of the liquid [kg/m³]	**300**	**400**	**500**	**600**	**700**	**800**	**900**	**1000**	**1100**	**1200**	**1300**	**1400**	**1500**
L-Measure [mm]	Immersion depth [%]												
400¹	-	70	55	50	40	35	35	30	30	25	25	20	20
500¹	-	70	60	50	40	40	35	30	30	25	25	25	20
600¹	-	75	60	50	45	40	35	30	30	25	25	25	20
700¹	-	75	60	50	45	40	35	30	30	30	25	25	25
800¹	-	75	65	55	45	40	35	35	30	30	25	25	25
900¹	-	80	65	55	45	40	35	35	30	30	25	25	25
1000¹	-	80	65	55	50	40	40	35	30	30	25	25	25
1100²	-	-	80	65	60	50	45	40	40	35	35	30	30
1200²	-	-	80	70	60	55	45	45	40	35	35	30	30
1300²	-	-	85	70	60	55	50	45	40	40	35	35	30
1400²	-	-	-	75	65	55	50	45	40	40	35	35	30
1500²	-	-	-	75	65	60	50	45	45	40	35	35	35
1600²	-	-	-	80	70	60	55	50	45	40	40	35	35
1700²	-	-	-	80	70	60	55	50	45	45	40	35	35
1800²	-	-	-	85	70	65	55	50	45	45	40	40	35
1900²	-	-	-	85	75	65	60	55	50	45	40	40	35
2000²	-	-	-	-	75	65	60	55	50	45	45	40	40
2100³	-	-	-	-	-	-	85	75	70	65	60	55	50
2200³	-	-	-	-	-	-	85	80	70	65	60	55	55
2300³	-	-	-	-	-	-	-	80	75	70	65	60	55
2400³	-	-	-	-	-	-	-	85	75	70	65	60	55
2500³	-	-	-	-	-	-	-	85	80	70	65	60	60
2600³	-	-	-	-	-	-	-	-	80	75	70	65	60
2700³	-	-	-	-	-	-	-	-	80	75	70	65	60
2800³	-	-	-	-	-	-	-	-	85	80	70	65	65
2900³	-	-	-	-	-	-	-	-	85	80	75	70	65
3000³	-	-	-	-	-	-	-	-	-	80	75	70	65
3100³	-	-	-	-	-	-	-	-	-	85	80	70	70
3200³	-	-	-	-	-	-	-	-	-	85	80	75	70
3300³	-	-	-	-	-	-	-	-	-	-	80	75	70
3400³	-	-	-	-	-	-	-	-	-	-	85	80	75
3500³	-	-	-	-	-	-	-	-	-	-	85	80	75
3600³	-	-	-	-	-	-	-	-	-	-	85	80	75
3700³	-	-	-	-	-	-	-	-	-	-	-	85	75
3800³	-	-	-	-	-	-	-	-	-	-	-	85	80
3900³	-	-	-	-	-	-	-	-	-	-	-	85	80
4000³	-	-	-	-	-	-	-	-	-	-	-	-	80
4100³	-	-	-	-	-	-	-	-	-	-	-	-	85
4200³	-	-	-	-	-	-	-	-	-	-	-	-	85

The top mounted level indicator are based on a modular design and can be arranged individually.
Type key page 332 - 336

¹ = Guidance rod 10 x 0.5 mm / ² = Guidance rod 10 x 1.0 mm / ³ = Guidance rod 16 x 1.0 mm

Cylindrical float **UZTIEECS/77/250** **Titanium ECTFE coated**

Diameter / length [mm]:	77 / 250
Design temperature [°C]:	-10 ... 150
Design pressure [bar]:	-1 ... 1
Weight [g]:	237
Flange min.:	DN 80

Float UZTIEECS/77/250													
Specific gravity of the liquid [kg/m³]	**300**	**400**	**500**	**600**	**700**	**800**	**900**	**1000**	**1100**	**1200**	**1300**	**1400**	**1500**
L-Measure [mm]	Immersion depth [%]												
400¹	-	-	75	65	55	50	45	40	35	35	30	30	30
500¹	-	-	80	65	55	50	45	40	40	35	35	30	30
600¹	-	-	80	65	60	50	45	40	40	35	35	30	30
700¹	-	-	-	70	60	55	50	45	40	35	35	35	30
800¹	-	-	-	70	60	55	50	45	40	40	35	35	
900¹	-	-	-	75	65	55	50	45	40	40	35	35	30
1000¹	-	-	-	75	65	55	50	45	45	40	35	35	35
1100²	-	-	-		80	70	65	55	50	50	45	40	40
1200²	-	-	-	-	-	75	65	60	55	50	45	45	40
1300²	-	-	-	-	-	75	65	60	55	50	50	45	40
1400²	-	-	-	-	-	75	70	65	60	55	50	45	45
1500²	-	-	-	-	-	80	70	65	60	55	50	50	45
1600²	-	-	-	-	-	-	75	65	60	55	55	50	45
1700²	-	-	-	-	-	-	75	70	65	60	55	50	50
1800²	-	-	-	-	-	-	80	70	65	60	55	50	50
1900²	-	-	-	-	-	-	80	75	65	60	55	55	50
2000²	-	-	-	-	-	-	-	75	70	65	60	55	50
2100³	-	-	-	-	-	-	-	-	-	-	80	75	70
2200³	-	-	-	-	-	-	-	-	-	-	-	80	75
2300³	-	-	-	-	-	-	-	-	-	-	-	80	75
2400³	-	-	-	-	-	-	-	-	-	-	-	-	80
2500³	-	-	-	-	-	-	-	-	-	-	-	-	80

The top mounted level indicator are based on a modular design and can be arranged individually.
Type key page 332 - 336

¹ = Guidance rod 11 x 0.5 mm / ² = Guidance rod 11 x 1.0 mm / ³ = Guidance rod 17 x 1.0 mm

Heinrich Kübler AG
Ruessenstrasse 4 | CH-6340 Baar | Phone +41 (0)41 766 62 62 | Fax +41 (0)41 766 62 63 | E-Mail info@kubler.ch | Internet www.kubler.ch

Cylindrical float **UZTIEECS/77/350** **Titanium ECTFE coated**

Diameter / length [mm]:	77 / 350
Design temperature [°C]:	-10 ... 150
Design pressure [bar]:	-1 ... 1
Weight [g]:	329
Flange min.:	DN 80

Float UZTIEECS/77/350													
Specific gravity of the liquid [kg/m³]	**300**	**400**	**500**	**600**	**700**	**800**	**900**	**1000**	**1100**	**1200**	**1300**	**1400**	**1500**
L-Measure [mm]	Immersion depth [%]												
400¹	-	80	65	55	45	40	35	35	30	30	25	25	25
500¹	-	80	65	55	50	40	40	35	30	30	25	25	25
600¹	-	85	65	55	50	45	40	35	35	30	30	25	25
700¹	-	85	70	60	50	45	40	35	35	30	30	25	25
800¹	-	85	70	60	50	45	40	35	35	30	30	25	25
900¹	-	-	70	60	50	45	40	40	35	30	30	30	25
1000¹	-	-	75	60	55	45	40	40	35	35	30	30	25
1100²	-	-	85	75	65	55	50	45	40	40	35	35	30
1200²	-	-	-	75	65	55	50	45	45	40	35	35	30
1300²	-	-	-	80	65	60	55	50	45	40	40	35	35
1400²	-	-	-	80	70	60	55	50	45	40	40	35	35
1500²	-	-	-	80	70	65	55	50	45	45	40	35	35
1600²	-	-	-	85	75	65	60	50	50	45	40	40	35
1700²	-	-	-	-	75	65	60	55	50	45	40	40	35
1800²	-	-	-	-	75	70	60	55	50	45	45	40	40
1900²	-	-	-	-	80	70	60	55	50	50	45	40	40
2000²	-	-	-	-	80	70	65	60	55	50	45	40	40
2100³	-	-	-	-	-	-	85	80	70	65	60	55	55
2200³	-	-	-	-	-	-	-	80	75	70	65	60	55
2300³	-	-	-	-	-	-	-	85	75	70	65	60	55
2400³	-	-	-	-	-	-	-	85	80	70	65	60	60
2500³	-	-	-	-	-	-	-	-	80	75	70	65	60
2600³	-	-	-	-	-	-	-	-	80	75	70	65	60
2700³	-	-	-	-	-	-	-	-	85	80	70	65	65
2800³	-	-	-	-	-	-	-	-	85	80	75	70	65
2900³	-	-	-	-	-	-	-	-	-	80	75	70	65
3000³	-	-	-	-	-	-	-	-	-	85	75	70	70
3100³	-	-	-	-	-	-	-	-	-	85	80	75	70
3200³	-	-	-	-	-	-	-	-	-	-	80	75	70
3300³	-	-	-	-	-	-	-	-	-	-	85	75	70
3400³	-	-	-	-	-	-	-	-	-	-	85	80	75
3500³	-	-	-	-	-	-	-	-	-	-	85	80	75
3600³	-	-	-	-	-	-	-	-	-	-	-	80	75
3700³	-	-	-	-	-	-	-	-	-	-	-	85	80
3800³	-	-	-	-	-	-	-	-	-	-	-	85	80
3900³	-	-	-	-	-	-	-	-	-	-	-	-	80
4000³	-	-	-	-	-	-	-	-	-	-	-	-	85
4100³	-	-	-	-	-	-	-	-	-	-	-	-	85
4200³	-	-	-	-	-	-	-	-	-	-	-	-	85

The top mounted level indicator are based on a modular design and can be arranged individually.
Type key page 332 - 336

¹ = Guidance rod 11 x 0.5 mm / ² = Guidance rod 11 x 1.0 mm / ³ = Guidance rod 17 x 1.0 mm

Cylindrical float **UZTIPFAS/77/250** **Titanium PFA coated**

Diameter / length [mm]:	77 / 250
Design temperature [°C]:	-10 ... 250
Design pressure [bar]:	-1 ... 1
Weight [g]:	251
Flange min.:	DN 80

Float UZTIPFAS/77/250													
Specific gravity of the liquid [kg/m³]	**300**	**400**	**500**	**600**	**700**	**800**	**900**	**1000**	**1100**	**1200**	**1300**	**1400**	**1500**
L-Measure [mm]	Immersion depth [%]												
400¹	-	-	80	65	60	50	45	40	40	35	35	30	30
500¹	-	-	80	70	60	50	45	45	40	35	35	30	30
600¹	-	-	-	70	60	55	50	45	40	35	35	35	30
700¹	-	-	-	70	60	55	50	45	40	40	35	35	30
800¹	-	-	-	75	65	55	50	45	40	40	35	35	30
900¹	-	-	-	75	65	55	50	45	45	40	35	35	35
1000¹	-	-	-	75	65	60	55	50	45	40	40	35	35
1100²	-	-	-	-	80	70	65	60	55	50	45	45	40
1200²	-	-	-	-	-	75	65	60	55	50	50	45	40
1300²	-	-	-	-	-	75	70	60	55	55	50	45	45
1400²	-	-	-	-	-	80	70	65	60	55	50	45	45
1500²	-	-	-	-	-	80	75	65	60	55	50	50	45
1600²	-	-	-	-	-	-	75	70	60	60	55	50	45
1700²	-	-	-	-	-	-	75	70	65	60	55	50	50
1800²	-	-	-	-	-	-	80	70	65	60	55	55	50
1900²	-	-	-	-	-	-	80	75	70	65	60	55	50
2000²	-	-	-	-	-	-	-	75	70	65	60	55	50
2100³	-	-	-	-	-	-	-	-	-	-	-	75	70
2200³	-	-	-	-	-	-	-	-	-	-	-	80	75
2300³	-	-	-	-	-	-	-	-	-	-	-	80	75
2400³	-	-	-	-	-	-	-	-	-	-	-	-	80
2500³	-	-	-	-	-	-	-	-	-	-	-	-	80

The top mounted level indicator are based on a modular design and can be arranged individually.
Type key page 332 - 336

¹ = Guidance rod 11 x 0.5 mm / ² = Guidance rod 11 x 1.0 mm / ³ = Guidance rod 17 x 1.0 mm

Heinrich Kübler AG
Ruessenstrasse 4 | CH-6340 Baar | Phone +41 (0)41 766 62 62 | Fax +41 (0)41 766 62 63 | E-Mail info@kubler.ch | Internet www.kubler.ch

Cylindrical float **UZTIPFAS/77/350** **Titanium PFA coated**

Diameter / length [mm]:	77 / 350
Design temperature [°C]:	-10 ... 250
Design pressure [bar]:	-1 ... 1
Weight [g]:	348
Flange min.:	DN 80

Float UZTIPFAS/77/350													
Specific gravity of the liquid [kg/m³]	**300**	**400**	**500**	**600**	**700**	**800**	**900**	**1000**	**1100**	**1200**	**1300**	**1400**	**1500**
L-Measure [mm]	Immersion depth [%]												
400¹	-	80	65	55	50	45	40	35	30	30	30	25	25
500¹	-	85	70	55	50	45	40	35	35	30	30	25	25
600¹	-	85	70	60	50	45	40	35	35	30	30	25	25
700¹	-	-	70	60	50	45	40	35	35	30	30	30	25
800¹	-	-	75	60	55	45	40	40	35	30	30	30	25
900¹	-	-	75	60	55	50	45	40	35	35	30	30	25
1000¹	-	-	75	65	55	50	45	40	35	35	30	30	30
1100²	-	-	-	75	65	55	50	45	40	40	35	35	30
1200²	-	-	-	75	65	60	55	50	45	40	40	35	35
1300²	-	-	-	80	70	60	55	50	45	40	40	35	35
1400²	-	-	-	80	70	60	55	50	45	45	40	35	35
1500²	-	-	-	85	75	65	55	50	50	45	40	40	35
1600²	-	-	-	85	75	65	60	55	50	45	40	40	35
1700²	-	-	-	-	75	70	60	55	50	45	45	40	40
1800²	-	-	-	-	80	70	60	55	50	45	45	40	40
1900²	-	-	-	-	80	70	65	60	55	50	45	40	40
2000²	-	-	-	-	85	75	65	60	55	50	45	45	40
2100³	-	-	-	-	-	-	-	80	70	65	60	60	55
2200³	-	-	-	-	-	-	-	80	75	70	65	60	55
2300³	-	-	-	-	-	-	-	85	75	70	65	60	55
2400³	-	-	-	-	-	-	-	85	80	75	65	65	60
2500³	-	-	-	-	-	-	-	-	80	75	70	65	60
2600³	-	-	-	-	-	-	-	-	85	75	70	65	60
2700³	-	-	-	-	-	-	-	-	85	80	75	70	65
2800³	-	-	-	-	-	-	-	-	-	80	75	70	65
2900³	-	-	-	-	-	-	-	-	-	85	75	70	65
3000³	-	-	-	-	-	-	-	-	-	85	80	75	70
3100³	-	-	-	-	-	-	-	-	-	85	80	75	70
3200³	-	-	-	-	-	-	-	-	-	-	80	75	70
3300³	-	-	-	-	-	-	-	-	-	-	85	80	75
3400³	-	-	-	-	-	-	-	-	-	-	85	80	75
3500³	-	-	-	-	-	-	-	-	-	-	-	80	75
3600³	-	-	-	-	-	-	-	-	-	-	-	85	80
3700³	-	-	-	-	-	-	-	-	-	-	-	85	80
3800³	-	-	-	-	-	-	-	-	-	-	-	85	80
3900³	-	-	-	-	-	-	-	-	-	-	-	-	85
4000³	-	-	-	-	-	-	-	-	-	-	-	-	85
4100³	-	-	-	-	-	-	-	-	-	-	-	-	85

The top mounted level indicator are based on a modular design and can be arranged individually.
Type key page 332 - 336

¹ = Guidance rod 11 x 0.5 mm / ² = Guidance rod 11 x 1.0 mm / ³ = Guidance rod 17 x 1.0 mm

Type	MRA / MRB / MRAN / MRBN MRK
Housing:	Aluminium anodized
Ingress protection class:	IP 67

MRA / MRB / MRAN / MRBN

Indication	
- Material quality (Colour) / Diameter:	Pocan (White / Red) / Ø 10 mm
End part:	Ryton, black
Sight cover - MRA / MRAN:	Macrolon
- MRB / MRBN:	Glass
Liquid temperature:	-40°C ... 300°C
Ambient temperature:	-40°C ... 200°C
MRAN / MRBN (over-roll-protected):	Roller rotation max. 180°

MRK

Indication	
- Material quality (Colour) / Diameter:	Ceramic (White / Blue) / Ø 10 mm
End part:	Aluminium
Sight cover:	Glass
Liquid temperature:	-40°C ... 400°C
Ambient temperature:	-40°C ... 400°C

Approvals / Certificates

ABS / ATEX / BV / EAC / GL / LR

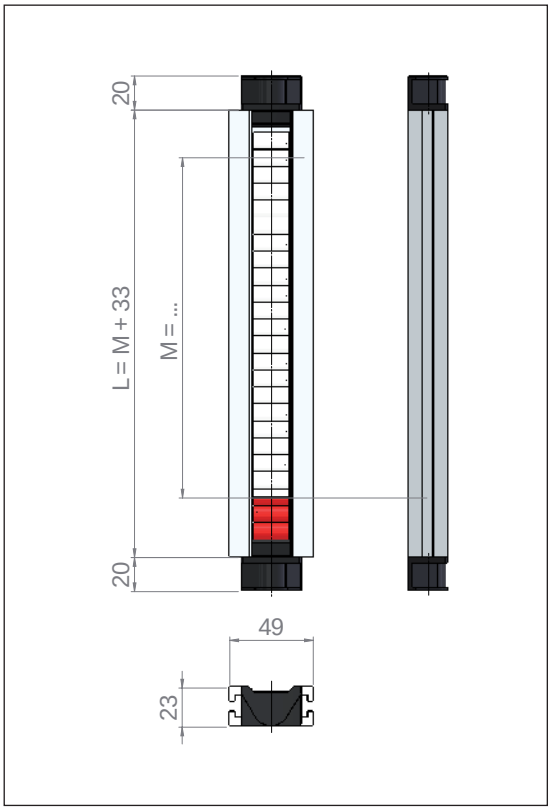

Type	MNAV / MNBV / MNAVN / MNBVN MNKV
Housing:	Aluminium with Stainless steel covered
Ingress protection class:	IP 67

MNAV / MNBV / MNAVN / MNBVN

Indication	
- Material quality (Colour) / Diameter:	Pocan (White / Red) / Ø 10 mm
End part:	Ryton, black
Sight cover - MNAV / MNAVN:	Macrolon
- MNBV / MNBVN:	Glass
Liquid temperature:	-40°C ... 300°C
Ambient temperature:	-40°C ... 200°C
MNAVN / MNBVN (over-roll-protected):	Roller rotation max. 180°

MNKV

Indication	
- Material quality (Colour) / Diameter:	Ceramic (White / Blue) / Ø 10 mm
End part:	Aluminium
Sight cover:	Glass
Liquid temperature:	-40°C ... 400°C
Ambient temperature:	-40°C ... 400°C

Approvals / Certificates

ABS / ATEX / BV / EAC / GL / LR

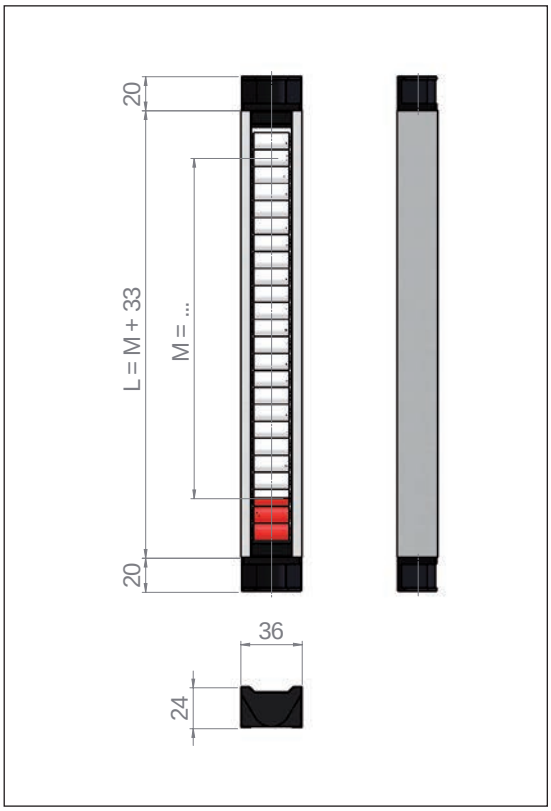

The top mounted level indicator are based on a modular design and can be arranged individually.
Type key page 332 - 336

Heinrich Kübler AG
Ruessenstrasse 4 | CH-6340 Baar | Phone +41 (0)41 766 62 62 | Fax +41 (0)41 766 62 63 | E-Mail info@kubler.ch | Internet www.kubler.ch

Type	SAK / SA.. / SV..

SAK

Scale:	Adhesive foil (black)
Angle profile:	Aluminium
Scaling:	in cm (0 cm .. 10 cm .. 20 cm .. 30 cm ..)
Width:	40 mm
Ambient temperature:	-40°C ... 200°C

SA0 / SA1 / SA2 / SA3 / SA4

Scale:	Engraved
Angle profile:	Aluminium
Scaling:	Blank / % / cm / inch. / ..
Width:	40 mm
Ambient temperature:	-40°C ... 200°C

SV0 / SV1 / SV2 / SV3 / SV4

Scale:	Engraved
Angle profile:	Stainless steel
Scaling:	Blank / % / cm / inch. / ..
Width:	40 mm
Ambient temperature:	-40°C ... 400°C

Approvals / Certificates

ABS / ATEX / BV / EAC / GL / LR

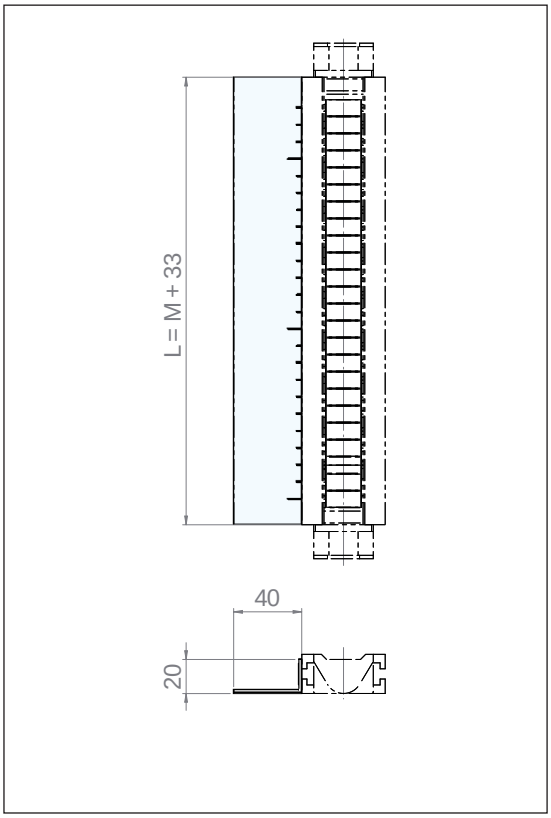

Type	Magnetic roller indicator sight extension PV
Material quality:	Acryl glass
Width:	35 mm
Depth:	67 mm
Ambient temperature:	-40°C ... 100°C
Mounting:	on magnetic roller indicator

Approvals / Certificates

ABS / ATEX / BV / EAC / GL / LR

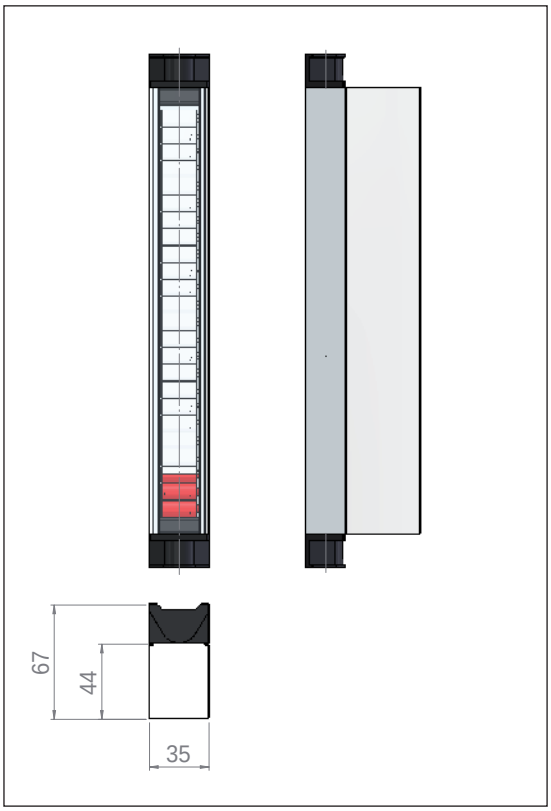

The top mounted level indicator are based on a modular design and can be arranged individually.
Type key page 332 - 336

Heinrich Kübler AG
Ruessenstrasse 4 | CH-6340 Baar | Phone +41 (0)41 766 62 62 | Fax +41 (0)41 766 62 63 | E-Mail info@kubler.ch | Internet www.kubler.ch

Connection diagram

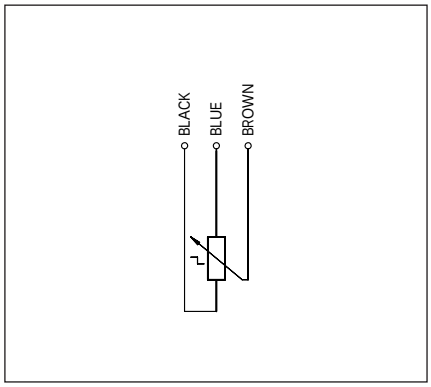

without Control unit

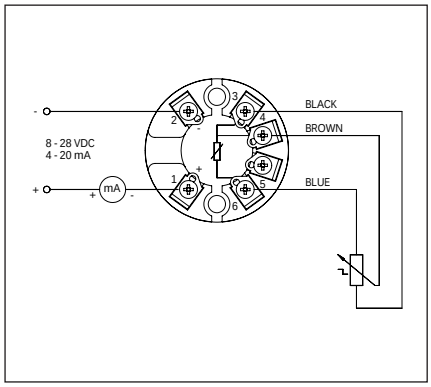

Control unit TP5343..

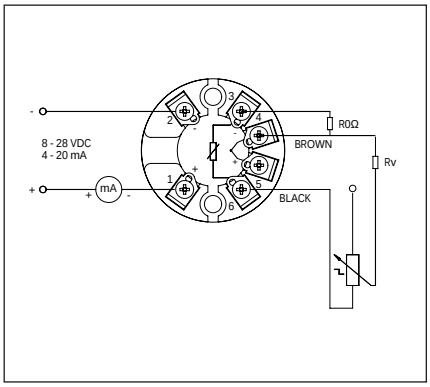

Control unit TD5335..

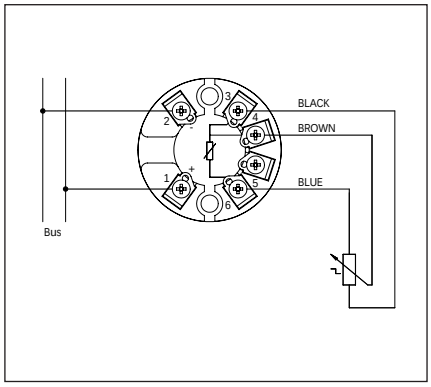

Control unit TP5350..

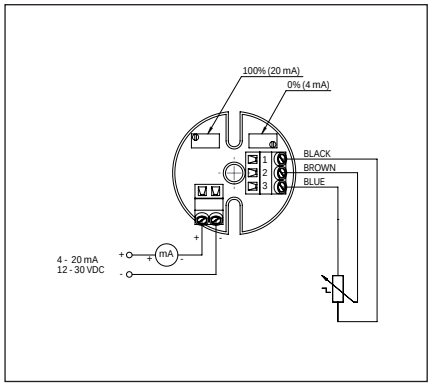

Control unit XT42SI Ex

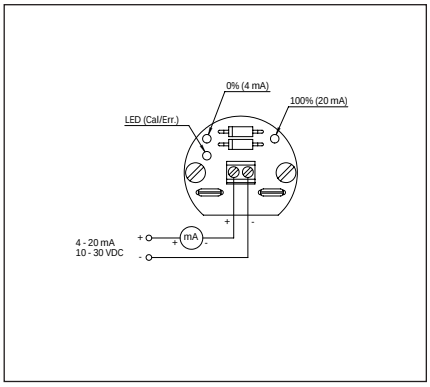

Control unit magnetostrictive

Some further data according to chapter Control Units 1011

Approvals / Certificates

ATEX-Approval for accuracy K5.. / K10.. / K15..*

II 1/2G Ex c ia IIC T6 - T3 Ga/Gb	II 2G Ex c d IIC T6 - T4 Gb	II 2G Ex c d IIC T6 - T4 Gb
II 1/2G Ex c d ia IIC T6 - T4 Ga/Gb	II 2D Ex c tb IIIC T80°C - T190°C bzw. T125°C Db IP6X	II 2D Ex c tb IIIC T80°C - T95°C bzw. T125°C Db IP6X

Type of protection intrinsic safety Ex ia IIC passive multi-pole device	U_i ≤ 30 V	I_i ≤ 150 mA		
Type of protection intrinsic safety Ex ia IIC with built-in separately certified measuring transducer		see appropriate special certificate		
Type of protection intrinsic safety Ex ia IIC switch or temperature switch	I_i ≤ 100 mA			
Type of protection intrinsic safety Ex ia IIC temperature sensor	U_N ≤ 28 V	I_i ≤ 100 mA	P_i ≤ 700 mW	
Type of protection “flameproof enclosure” passive multi-pole device	U_N ≤ 30 VDC/AC	I_N ≤ 150 mA		
Type of protection “flameproof enclosure” temperature switch / sensor	U_N ≤ 100 VDC/AC	I_N ≤ 300 mA	P_{SN} ≤ 1 W	P_{FN} ≤ 700 mW

ATEX-Approval for accuracy K1..*

II 2G Ex ia IIB/IIC T6 - T1 Gb II 2G Ex d IIC T4

Type of protection intrinsic safety Ex ia IIC	U_i ≤ 30 V	I_i ≤ 200 mA	P_i ≤ 1000 mW
Temperature class	T6	T5	T4 - T2
Ambient temperature(T_a)	-40°C ... 40°C	-40°C ... 55°C	-40°C ... 85°C

The top mounted level indicator are based on a modular design and can be arranged individually.
Type key page 332 - 336

* = The approval is dependent on the equipment combination

Heinrich Kübler AG
Ruessenstrasse 4 | CH-6340 Baar | Phone +41 (0)41 766 62 62 | Fax +41 (0)41 766 62 63 | E-Mail info@kubler.ch | Internet www.kubler.ch

Type **ALF/../V/../..-M..**

Electrical connection:	Aluminium anodized
Cable entry:	M20 x 1.5
Ingress protection class:	IP 65
Ambient temperature:	-40°C ... 100°C
Level transmitter tube material quality:	Stainless steel
Mounting:	T-shaped sliding block or tension strap
Minimum measures:	T: 27 mm / L1: 40 mm / Ub: 50 mm

Accuracy

Accuracy:	5 / 10 / 15 mm
Ambient temperature / ATEX Exia:	
- K5 / K10 / K15:	-30°C ... 130°C
- K5HTF / K10HTF / K15HTF:	-40°C ... 200°C / -40°C ... 180°C
- K5HT / K10HT / K15HT:	-40°C ... 250°C / -40°C ... 180°C

Option control unit / Page 366

Control unit:	- Programmable - Hart-programmable / SIL2 - Profibus PA - Foundation Fieldbus

Approvals / Certificates

ABS / ATEX / BV / EAC / GL / LR

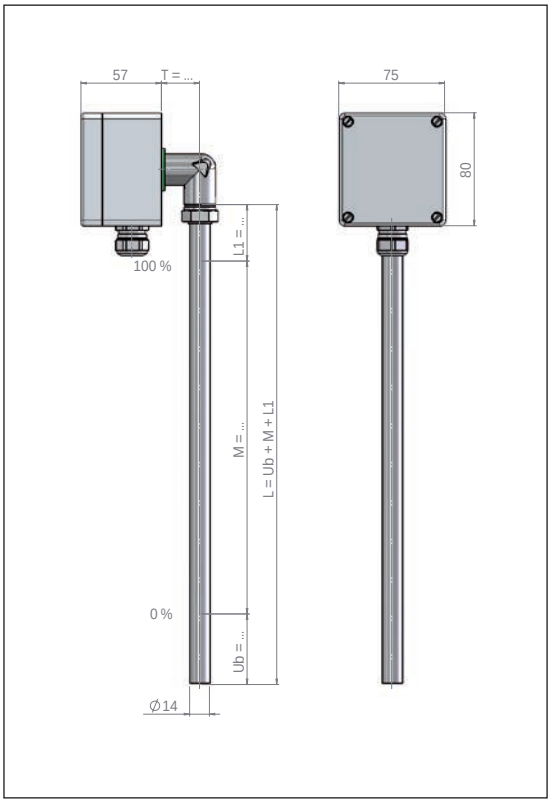

Type **ALDA/../V/../EXDG-M..**

Electrical connection:	Aluminium coated RAL 9006
Cable entry:	M20 x 1.5
Ingress protection class:	IP 68
Ambient temperature:	-40°C ... 100°C
Level transmitter tube material quality:	Stainless steel
Mounting:	T-shaped sliding block or tension strap
Minimum measures:	T: 50 mm / L1: 40 mm / Ub: 50 mm

Accuracy

Accuracy:	5 / 10 / 15 mm
Ambient temperature	
- K5 / K10 / K15:	-30°C ... 120°C
- K5HTF / K10HTF / K15HTF:	-40°C ... 120°C
- K5HT / K10HT / K15HT:	-40°C ... 120°C

Option control unit / Page 366

Control unit:	- Programmable - Hart-programmable / SIL2 - Profibus PA - Foundation Fieldbus

Approvals / Certificates

ABS / ATEX / BV / EAC / GL / LR

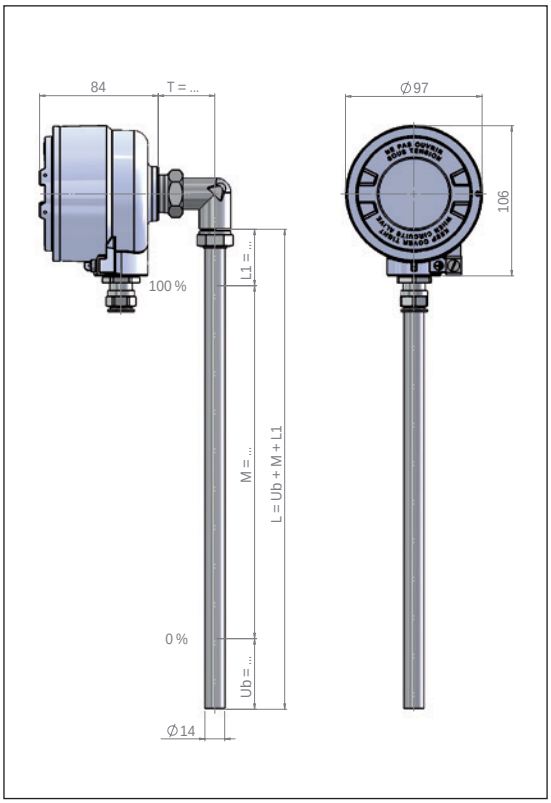

The top mounted level indicator are based on a modular design and can be arranged individually.
Type key page 332 - 336

Heinrich Kübler AG
Ruessenstrasse 4 | CH-6340 Baar | Phone +41 (0)41 766 62 62 | Fax +41 (0)41 766 62 63 | E-Mail info@kubler.ch | Internet www.kubler.ch

Type **DAALA/../V/..-M..**

Electrical connection:	Aluminium anodized
Cable entry:	M20 x 1.5
Ingress protection class:	IP 65
Ambient temperature:	-40°C ... 60°C
Display:	4-digit LED display in red / Free scaling
Current input:	4 ... 20 mA
Level transmitter tube material quality:	Stainless steel
Mounting:	Tension strap
Minimum measures:	T: 50 mm / L1: 40 mm / Ub: 50 mm

Accuracy:	5 / 10 / 15 mm
Ambient temperature	
- K5 / K10 / K15:	-30°C ... 130°C
- K5HTF / K10HTF / K15HTF:	-40°C ... 200°C
- K5HT / K10HT / K15HT:	-40°C ... 250°C

Option control unit / Page 366

Control unit:	- Programmable - Hart-programmable / SIL2 - Profibus PA - Foundation Fieldbus

Approvals / Certificates

EAC

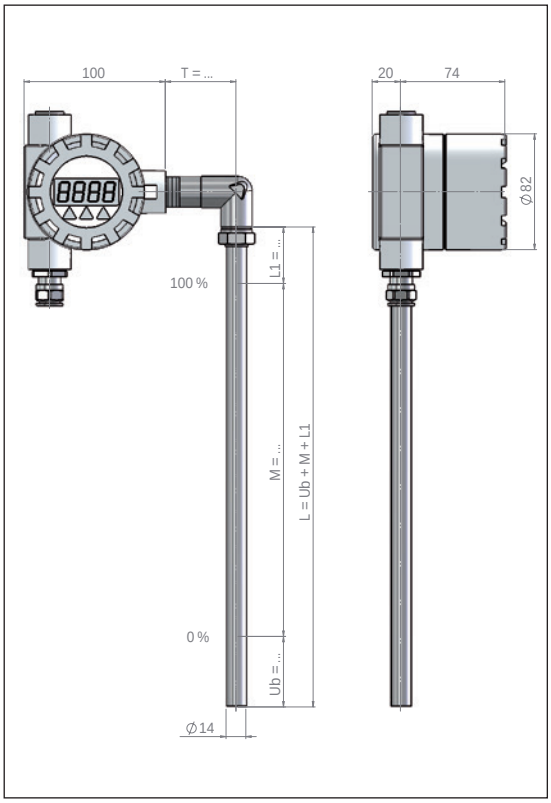

Type **DAAVDA/../V/../EXDG-M..**

Electrical connection:	Stainless steel electropolished
Cable entry:	M20 x 1.5
Ingress protection class:	IP 68
Ambient temperature:	-40°C ... 60°C
Display:	4-digit LED display in red / Free scaling
Current input:	4 ... 20 mA
Level transmitter tube material quality:	Stainless steel
Mounting:	Tension strap
Minimum measures:	T: 50 mm / L1: 40 mm / Ub: 50 mm

Accuracy:	5 / 10 / 15 mm
Ambient temperature	
- K5 / K10 / K15:	-30°C ... 130°C (Exd 120°C)
- K5HTF / K10HTF / K15HTF:	-40°C ... 180°C (Exd 120°C)
- K5HT / K10HT / K15HT:	-40°C ... 180°C (Exd 120°C)

Option control unit / Page 366

Control unit:	- Programmable - Hart-programmable / SIL2 - Profibus PA - Foundation Fieldbus

Approvals / Certificates

ATEX / EAC

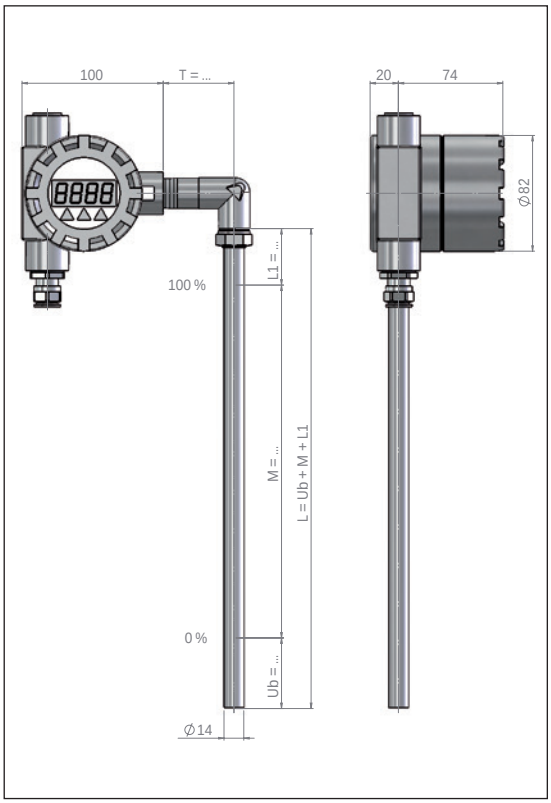

The top mounted level indicator are based on a modular design and can be arranged individually.
Type key page 332 - 336

Heinrich Kübler AG
Ruessenstrasse 4 | CH-6340 Baar | Phone +41 (0)41 766 62 62 | Fax +41 (0)41 766 62 63 | E-Mail info@kubler.ch | Internet www.kubler.ch

Type **AVA/../V/..-M..**

Electrical connection:	Stainless steel A4 (SS316)
Cable entry:	M20 x 1.5
Ingress protection class:	IP 67
Ambient temperature:	-40°C ... 85°C
Level transmitter tube material quality:	Stainless steel
Mounting:	T-shaped sliding block or tension strap
Minimum measures:	T: 50 mm / L1: 40 mm / Ub: 50 mm

Accuracy

Accuracy:	5 / 10 / 15 mm
Ambient temperature / ATEX Exia:	
- K5 / K10 / K15:	-30°C ... 130°C
- K5HTF / K10HTF / K15HTF:	-40°C ... 200°C / -40°C ... 180°C
- K5HT / K10HT / K15HT:	-40°C ... 250°C / -40°C ... 180°C

Option control unit / Page 366

Control unit:	- Programmable - Hart-programmable / SIL2 - Profibus PA - Foundation Fieldbus

Approvals / Certificates

ABS / ATEX / BV / EAC / GL / LR

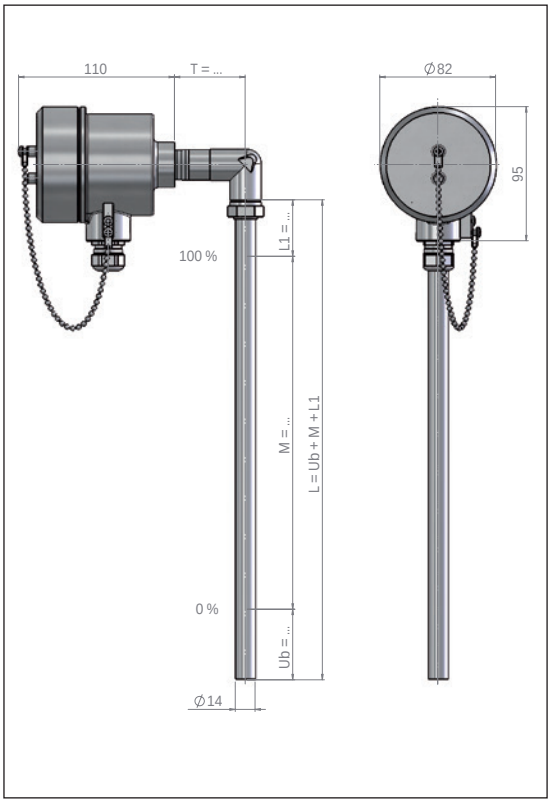

Type **AVM/../V/../..-M..**

Electrical connection:	Stainless steel A4 (SS316)
Cable entry:	M16 x 1.5
Ingress protection class:	IP 68
Ambient temperature:	-40°C ... 85°C / ATEX temperature p. 366
Level transmitter tube material quality:	Stainless steel
Mounting:	T-shaped sliding block or tension strap
Minimum measures:	L1: 40 mm / Ub: 50 mm

Accuracy

Accuracy:	0.2 mm
Ambient temperature / ATEX Exia:	
- K1:	-40 ... 125°C / ATEX temperature p. 366
- K1HT:	-40 ... 250°C / ATEX temperature p. 366

Control unit

- MST / MSTB:	- Programmable 4 ... 20 mA, 10 ... 30 VDC
- MSTH / MSTHB:	- Hart-programmable 4 ... 20 mA, 10 ... 30 VDC

Approvals / Certificates

ATEX / EAC / IECEX / SIL2

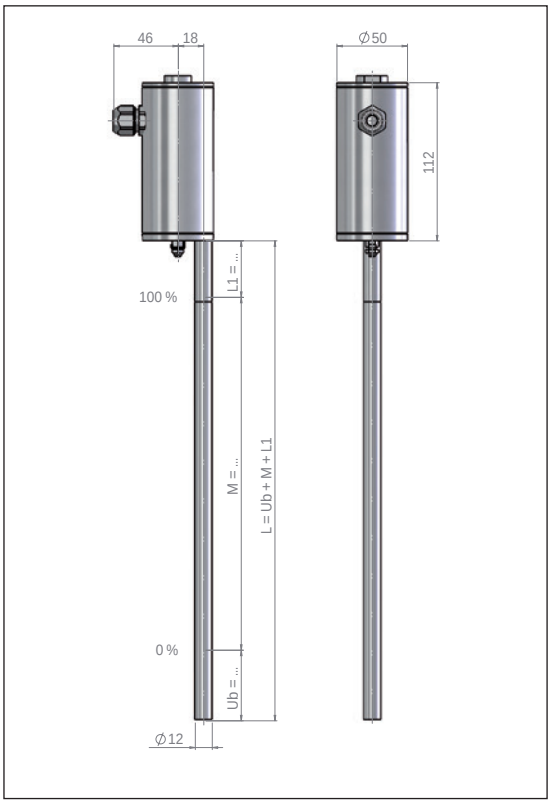

The top mounted level indicator are based on a modular design and can be arranged individually.
Type key page 332 - 336

Heinrich Kübler AG
Ruessenstrasse 4 | CH-6340 Baar | Phone +41 (0)41 766 62 62 | Fax +41 (0)41 766 62 63 | E-Mail info@kubler.ch | Internet www.kubler.ch

Type **AVDM/../V/../EXDG-M..**

Electrical connection:	Stainless steel A4 (SS316)
Cable entry:	M20 x 1.5
Ingress protection class:	IP 68
Ambient temperature:	ATEX temperature page 366
Level transmitter tube material quality:	Stainless steel
Mounting:	T-shaped sliding block or tension strap
Minimum measures:	L1: 40 mm / Ub: 50 mm

Accuracy

Accuracy:	0.2 mm
Ambient temperature - K1:	ATEX temperature page 366

Control unit

- MSTB:	- Programmable 4 ... 20 mA, 10 ... 30 VDC
- MSTHB:	- Hart-programmable 4 ... 20 mA, 10 ... 30 VDC

Approvals / Certificates

ATEX / EAC / IECEX / SIL2

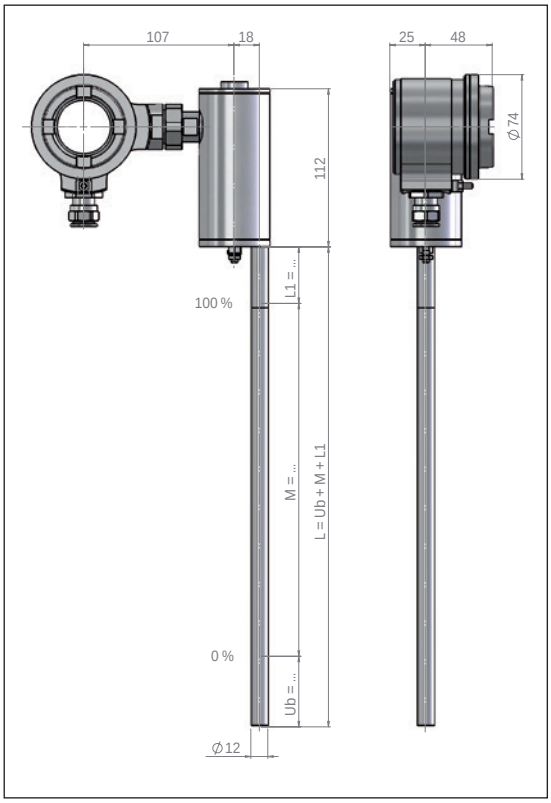

Type **DAAVDM/../V/../EXDG-M..**

Electrical connection:	Stainless steel A4 (SS316)
Cable entry:	M20 x 1.5
Ingress protection class:	IP 68
Ambient temperature:	ATEX temperature page 366
Level transmitter tube material quality:	Stainless steel
Mounting:	T-shaped sliding block or tension strap
Minimum measures:	L1: 40 mm / Ub: 50 mm

Accuracy

Accuracy:	0.2 mm
Ambient temperature - K1:	ATEX temperature page 366

Control unit

- MSTB:	- Programmable 4 ... 20 mA, 10 ... 30 VDC
- MSTHB:	- Hart-programmable 4 ... 20 mA, 10 ... 30 VDC

Approvals / Certificates

ATEX / EAC / IECEX / SIL2

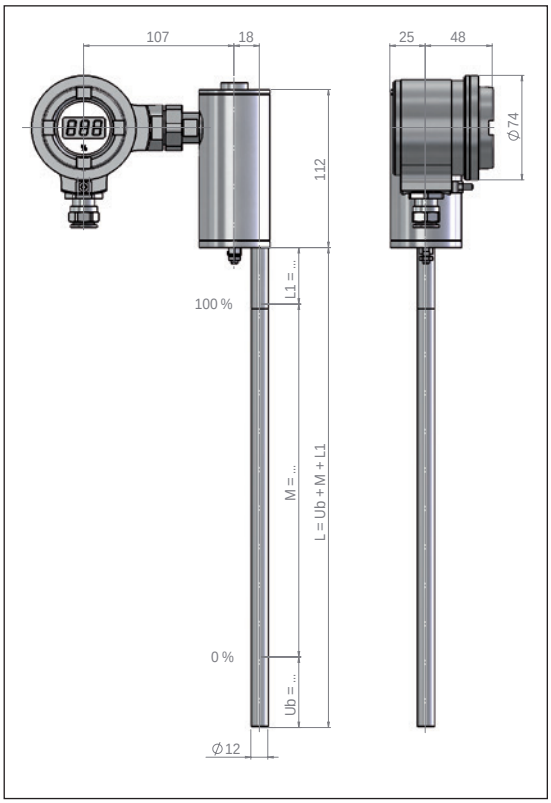

The top mounted level indicator are based on a modular design and can be arranged individually.
Type key page 332 - 336

Heinrich Kübler AG
Ruessenstrasse 4 | CH-6340 Baar | Phone +41 (0)41 766 62 62 | Fax +41 (0)41 766 62 63 | E-Mail info@kubler.ch | Internet www.kubler.ch

Notes

The top mounted level indicator are based on a modular design and can be arranged individually.
Type key page 332 - 336

Connection diagram

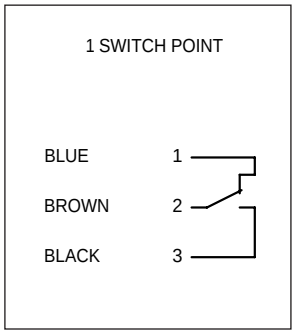

Change over (SPDT)

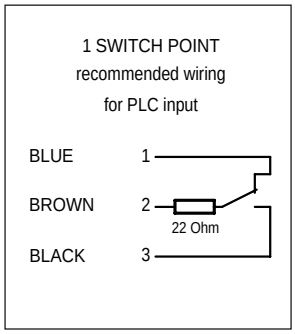

Change over (SPDT)
with resistor

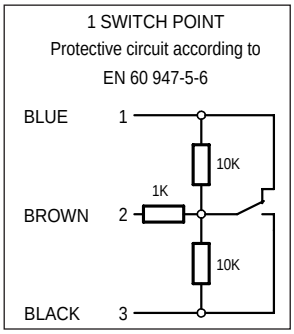

Change over (SPDT)
with NAMUR EN 60947

Approvals / Certificates

ATEX*

II 2G Ex ia IIC T6 - T1 Gb	II 2G Ex d IIC T6 - T4 Gb
II 2D Ex tb IIIC T80°C - T300°C Db IP6X	II 2D Ex tb IIIC T80°C - T120°C Db IP6X

Type of protection intrinsic safety Ex ia IIC	I_i ≤ 100 mA		
Type of protection intrinsic safety Ex ia IIC with option /R22 (resistor)	I_i ≤ 100 mA		
Type of protection intrinsic safety Ex ia IIC with option /N (NAMUR EN 60947)	U_i ≤ 15 VDC	I_i ≤ 60 mA	
Type of protection „flameproof enclosure“	U_N ≤ 250 VDC/AC	I_N ≤ 100 mA	
Type of protection „flameproof enclosure“ with option /R22 (resistor)	U_N ≤ 250 VDC/AC	I_N ≤ 100 mA	P_V ≤ 0.21 W
Type of protection „flameproof enclosure“ with option /N (NAMUR EN 60947)	U_N ≤ 15 VDC	I_N ≤ 60 mA	

The top mounted level indicator are based on a modular design and can be arranged individually.
Type key page 332 - 336

Heinrich Kübler AG
Ruessenstrasse 4 | CH-6340 Baar | Phone +41 (0)41 766 62 62 | Fax +41 (0)41 766 62 63 | E-Mail info@kubler.ch | Internet www.kubler.ch

Type	**BGU/../../../..** **BGU/../../../../EXIAG**
Housing:	Aluminium anodized
Ingress protection class:	IP 65
Mounting:	Right or left at the magnetic roller indicator
Ambient temperature / ATEX Exia:	
- with PVC connection cable:	-20°C ... 80°C / -20°C ... 80°C
- with Silikon connection cable:	-60°C ... 180°C / -25°C ... 180°C
- with PUR connection cable:	-40°C ... 80°C / -25°C ... 80°C
- with Radox connection cable:	-35°C ... 120°C / -25°C ... 120°C
Switch function	
Function:	Change over (SPDT)
Switch behaviour:	Bistable
Switching capacity:	230 V / 0.5 A / 40 VA
Switching capacity / ATEX Exia:	Exia 100 mA / Exia NAMUR 60 mA
Switching hysteresis:	5 mm ... 7 mm
Options	
- Switch option .. /R22:	Resistor 22 Ohm / 0.21 W
- Switch option .. /N:	NAMUR EN 60947
Approvals / Certificates	
AABS / ATEX / BV / EAC / GL / LR / SIL1	

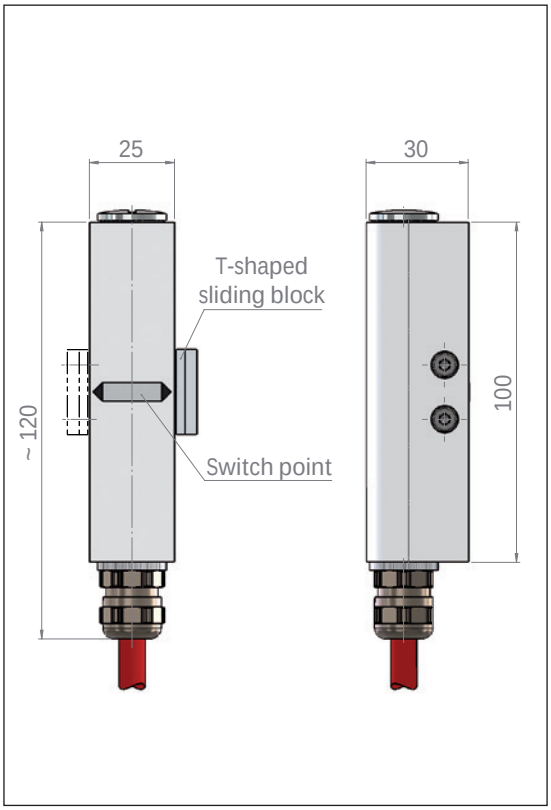

Type	**BGUD/../../../../EXDG**
Housing:	Aluminium anodized
Ingress protection class:	IP 65
Mounting:	Right or left at the magnetic roller indicator
Ambient temperature:	
- with PVC connection cable:	-20°C ... 80°C
- with Silikon connection cable:	-25°C ... 120°C
- with PUR connection cable:	-25°C ... 80°C
- with Radox connection cable:	-25°C ... 120°C
Switch function	
Function:	Change over (SPDT)
Switch behaviour:	Bistable
Switching capacity:	U_N 250 V / P_{SN} 50 W/VA / P_{FN} 700 mW
- NAMUR EN 60947:	U_N 15 VDC / I_N 60 mA
- with resistor:	U_N 250 V / I_N 100 mA
Switching hysteresis:	5 mm ... 7 mm
Options	
- Switch option .. /R22:	Resistor 22 Ohm / 0.21 W
- Switch option .. /N:	NAMUR EN 60947
Approvals / Certificates	
ABS / ATEX / BV / EAC / GL / LR / SIL1	

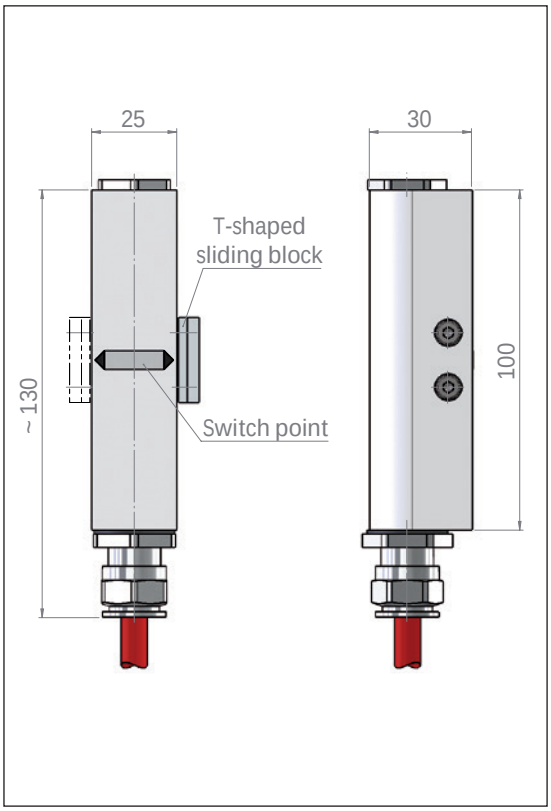

The top mounted level indicator are based on a modular design and can be arranged individually.
Type key page 332 - 336

Heinrich Kübler AG
Ruessenstrasse 4 | CH-6340 Baar | Phone +41 (0)41 766 62 62 | Fax +41 (0)41 766 62 63 | E-Mail info@kubler.ch | Internet www.kubler.ch

Type	**BGUALE/..** **BGUALE/../EXIAG**
Housing:	Aluminium anodized
Cable entry:	M20 x 1.5
Ingress protection class:	IP 65 (optional IP 66)
Mounting:	Right or left at the magnetic roller indicator
Ambient temperature / ATEX Exia:	-40°C ... 130°C / -25°C ... 130°C

Switch function

Function:	Change over (SPDT)
Switch behaviour:	Bistable
Switching capacity:	230 V / 0.5 A / 40 VA
Switching capacity / ATEX Exia:	Exia 100 mA / Exia NAMUR 60 mA
Switching hysteresis:	5 mm ... 7 mm

Options

- Switch option .. /R22:	Resistor 22 Ohm / 0.21 W
- Switch option .. /N:	NAMUR EN 60947

Approvals / Certificates

ABS / ATEX / BV / EAC / GL / LR / SIL1

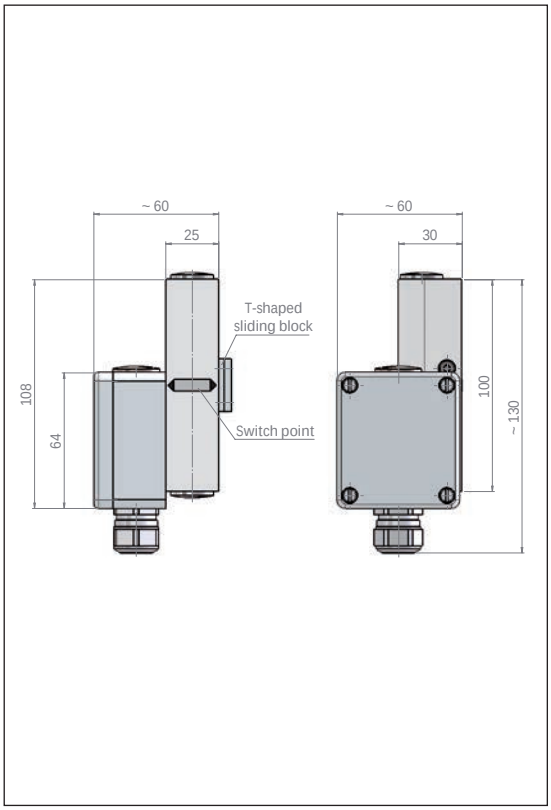

Type	**BGUASQ/..** **BGUASQ/../EXIAG**
Housing:	Aluminium anodized
Ingress protection class:	IP 65
Mounting:	Right or left at the magnetic roller indicator
Ambient temperature / ATEX Exia:	-25°C ... 50°C
- ATEX Exia with resistor:	-25°C ... 45°C
- ATEX Exia with NAMUR EN 60947:	-25°C ... 45°C

Switch function

Function:	Change over (SPDT)
Switch behaviour:	Bistable
Switching capacity:	230 V / 0.5 A / 40 VA
Switching capacity / ATEX Exia:	Exia 100 mA / Exia NAMUR 60 mA
Switching hysteresis:	5 mm ... 7 mm

Options

- Switch option .. /R22:	Resistor 22 Ohm / 0.21 W
- Switch option .. /N:	NAMUR EN 60947

Approvals / Certificates

ABS / ATEX / BV / EAC / GL / LR / SIL1

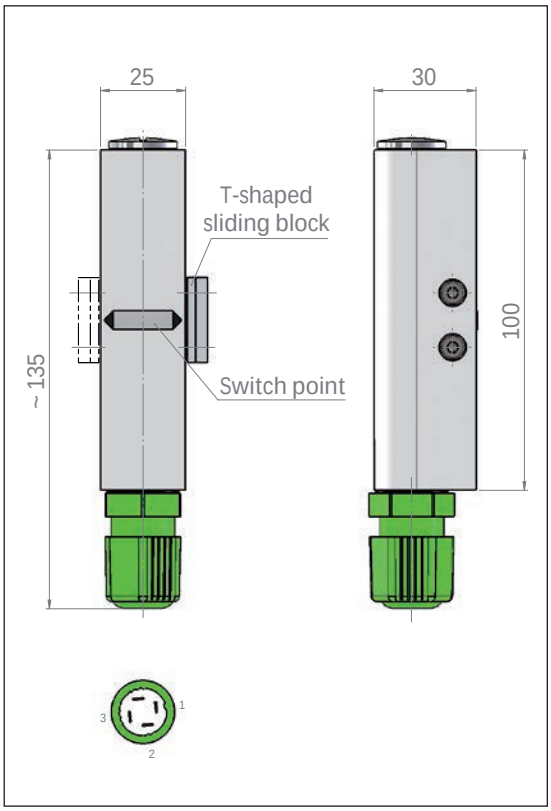

The top mounted level indicator are based on a modular design and can be arranged individually.
Type key page 332 - 336

Heinrich Kübler AG
Ruessenstrasse 4 | CH-6340 Baar | Phone +41 (0)41 766 62 62 | Fax +41 (0)41 766 62 63 | E-Mail info@kubler.ch | Internet www.kubler.ch

Type	**BGUASMA/../../../..** **BGUASMA/../../../../EXIAG**

Housing:	Aluminium anodized
Connector:	M12
Ingress protection class:	IP 65
Mounting:	Right or left at the magnetic roller indicator
Ambient temperature:	-25°C ... 90°C

Switch function

Function:	Change over (SPDT)
Switch behaviour:	Bistable
Switching capacity:	230 V / 0.5 A / 40 VA
Switching capacity / ATEX Exia:	Exia 100 mA / Exia NAMUR 60 mA
Switching hysteresis:	5 mm ... 7 mm

Options

- Switch option .. /R22:	Resistor 22 Ohm / 0.21 W
- Switch option .. /N:	NAMUR EN 60947

Approvals / Certificates

ATEX / EAC / SIL1

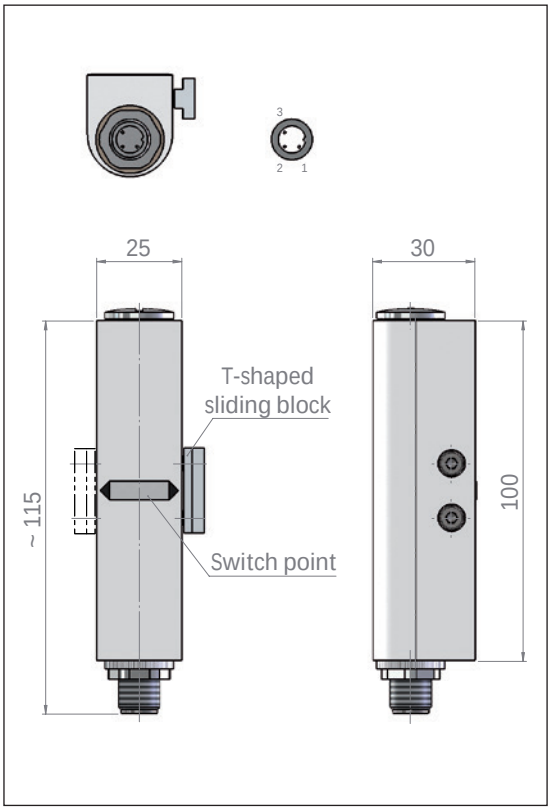

Type	**RU60/../../../..** **RU60/../../../../EXIAG**

Housing:	Aluminium anodized
Ingress protection class:	IP 68
Mounting:	Free positionable on the chamber
Ambient temperature / ATEX Exia:	
- with PVC connection cable:	-20°C ... 80°C
- with Silikon connection cable:	-40°C ... 180°C
- with PUR connection cable:	-40°C ... 80°C
- with Radox connection cable:	-35°C ... 120°C

Switch function

Function:	Change over (SPDT)
Switch behaviour:	Bistable
Switching capacity:	230 V / 0.5 A / 30 VA
Switching capacity / ATEX Exia:	Exia 100 mA / Exia NAMUR 60 mA
Switching hysteresis:	5 mm ... 7 mm

Options

- Switch option .. /R22:	Resistor 22 Ohm / 0.21 W
- Switch option .. /N:	NAMUR EN 60947

Approvals / Certificates

ABS / ATEX / BV / EAC / GL / LR / SIL1

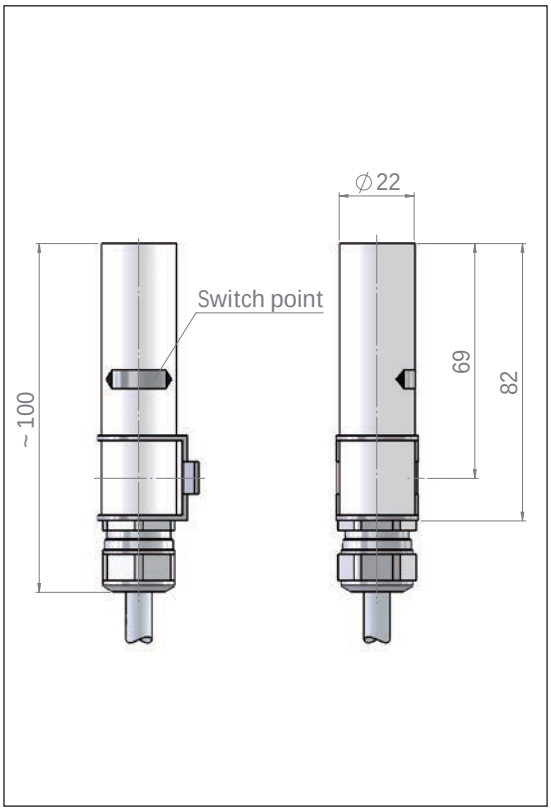

The top mounted level indicator are based on a modular design and can be arranged individually.
Type key page 332 - 336

Type	**RUV60/../../../..** **RUV60/../../../../EXIAG**

Housing:	Stainless steel
Ingress protection class:	IP 68
Mounting:	Free positionable on the chamber
Ambient temperature / ATEX Exia:	
- with PVC connection cable:	-20°C ... 80°C
- with Silikon connection cable:	-40°C ... 180°C
- with PUR connection cable:	-40°C ... 80°C
- with Radox connection cable:	-35°C ... 120°C

Switch function	
Function:	Change over (SPDT)
Switch behaviour:	Bistable
Switching capacity:	230 V / 0.5 A / 30 VA
Switching capacity / ATEX Exia:	Exia 100 mA / Exia NAMUR 60 mA
Switching hysteresis:	5 mm ... 7 mm

Options	
- Switch option .. /R22:	Resistor 22 Ohm / 0.21 W
- Switch option .. /N:	NAMUR EN 60947

Approvals / Certificates

ABS / ATEX / BV / EAC / GL / LR / SIL1

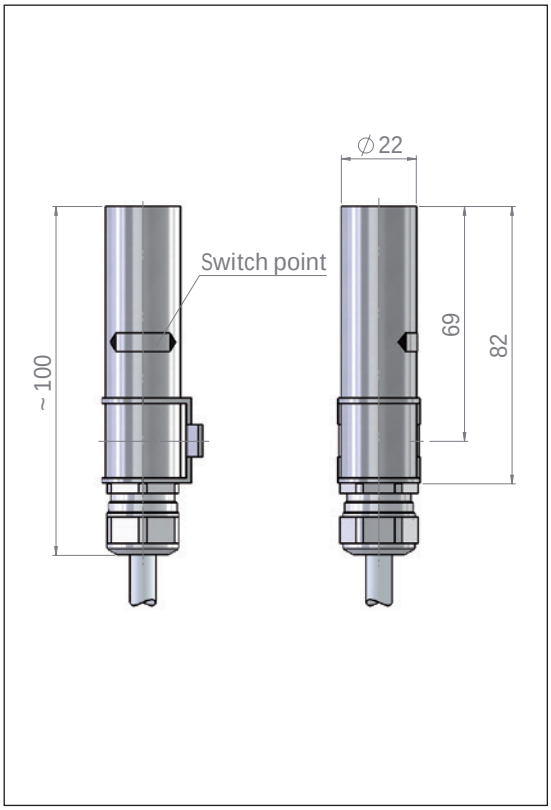

Type	**RUVD60/../../../../EXDG**

Housing:	Stainless steel
Ingress protection class:	IP 68
Mounting:	Free positionable on the chamber
Ambient temperature / ATEX Exia:	
- with PVC connection cable:	-20°C ... 80°C
- with Silikon connection cable:	-40°C ... 120°C
- with PUR connection cable:	-40°C ... 80°C
- with Radox connection cable:	-35°C ... 120°C

Switch function	
Function:	Change over (SPDT)
Switch behaviour:	Bistable
Switching capacity:	U_N 250 V / P_{SN} 50 W/VA / P_{FN} 700 mW
- NAMUR EN 60947:	U_N 15 VDC / I_N 60 mA
- with resistor:	U_N 250 V / I_N 100 mA
Switching hysteresis:	5 mm ... 7 mm

Options	
- Switch option .. /R22:	Resistor 22 Ohm / 0.21 W
- Switch option .. /N:	NAMUR EN 60947

Approvals / Certificates

ABS / ATEX / BV / EAC / GL / LR / SIL1

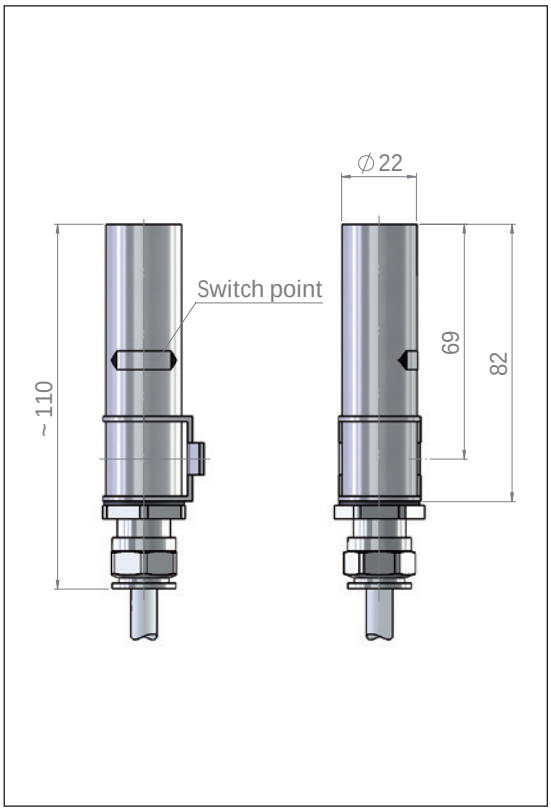

The top mounted level indicator are based on a modular design and can be arranged individually.
Type key page 332 - 336

Heinrich Kübler AG
Ruessenstrasse 4 | CH-6340 Baar | Phone +41 (0)41 766 62 62 | Fax +41 (0)41 766 62 63 | E-Mail info@kubler.ch | Internet www.kubler.ch

Type	**ALFU/..** **ALFU/../EXIAG**
Housing:	Aluminium coated RAL 9006
Cable entry:	M20 x 1.5
Ingress protection class:	IP 65 (optional IP 66)
Mounting:	Free positionable on the chamber
Ambient temperature:	-40°C ... 300°C
- with 22 Ohm Resistor:	-40°C ... 220°C
- with NAMUR EN 60947:	-40°C ... 220°C
Switch function	
Function:	Change over (SPDT)
Switch behaviour:	Bistable
Switching capacity:	230 V / 0.5 A / 40 VA
Switching capacity / ATEX Exia:	Exia 100 mA / Exia NAMUR 60 mA
Switching hysteresis:	5 mm ... 7 mm
Options	
- Switch option .. /R22:	Resistor 22 Ohm / 0.21 W
- Switch option .. /N:	NAMUR EN 60947
Approvals / Certificates	
ABS / ATEX / BV / EAC / GL / LR / SIL1	

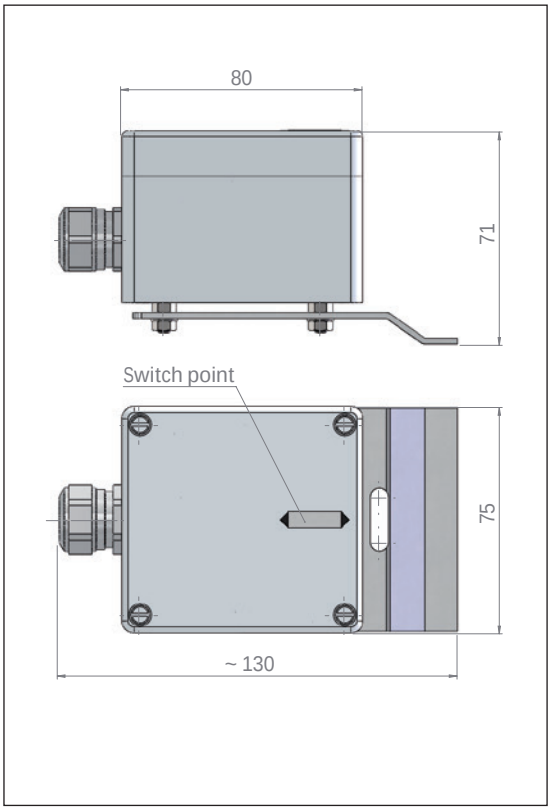

Type	**ALFI** **ALFI/EXIAG**
Housing:	Aluminium coated RAL 9006
Cable entry:	M20 x 1.5
Ingress protection class:	IP 65
Mounting:	Free positionable on the chamber
Ambient temperature / ATEX Exia:	-40°C ... 100°C / -40°C ... 73°C
Power supply:	5.0 ... 25 VDC
Nominal voltage:	8.0 VDC (R_i ~ 1 Ohm)
Self inductance:	100 mH
Self capacitance:	30 nF
Switch function	
Function:	NAMUR Normally closed (NC) (Proximity switch)
Switch behaviour:	Bistable
Intrinsic safety data:	U_i = 16 VDC I_i = 25 mA P_i = 34 mW
Approvals / Certificates	
ATEX / EAC / SIL1	

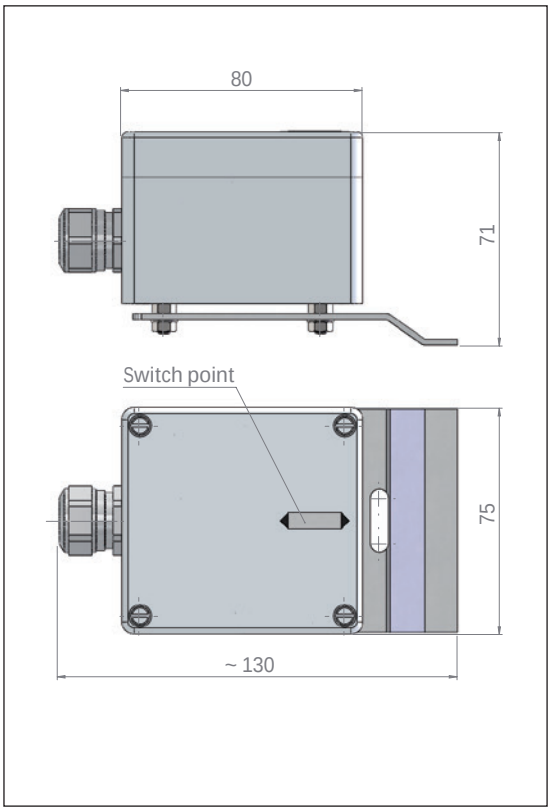

The top mounted level indicator are based on a modular design and can be arranged individually.
Type key page 332 - 336

Type	**ALEU/..** **ALEU/../EXIAG**
Housing:	Aluminium anodized
Cable entry:	M20 x 1.5
Ingress protection class:	IP 65
Mounting:	Free positionable on the chamber
Ambient temperature / ATEX Exia:	-40°C ... 130°C / -25°C ... 130°C
Switch function	
Function:	Change over (SPDT)
Switch behaviour:	Bistable
Switching capacity:	230 V / 0.5 A / 40 VA
Switching capacity / ATEX Exia:	Exia 100 mA / Exia NAMUR 60 mA
Switching hysteresis:	5 mm ... 7 mm
Options	
- Switch option .. /R22:	Resistor 22 Ohm / 0.21 W
- Switch option .. /N:	NAMUR EN 60947
Approvals / Certificates	
ABS / ATEX / BV / EAC / GL / LR / SIL1	

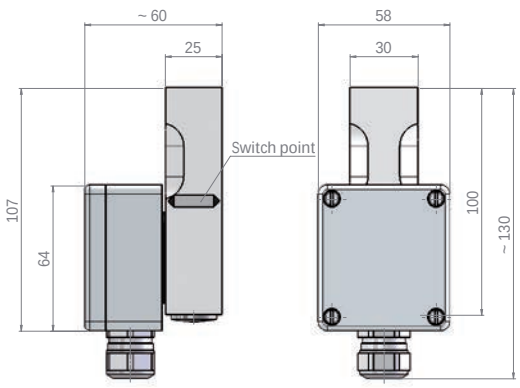

Type	**APAVU/..** **APBVU/../EXIAG**
Housing:	Polyester / Stainless steel
Cable entry:	M20 x 1.5
Ingress protection class:	IP 65
Mounting:	Free positionable on the chamber
Ambient temperature:	-10°C ... 100°C
Switch function	
Function:	Change over (SPDT)
Switch behaviour:	Bistable
Switching capacity:	230 V / 0.5 A / 40 VA
Switching capacity / ATEX Exia:	Exia 100 mA / Exia NAMUR 60 mA
Switching hysteresis:	5 mm ... 7 mm
Options	
- Switch option .. /R22:	Resistor 22 Ohm / 0.21 W
- Switch option .. /N:	NAMUR EN 60947
Approvals / Certificates	
ATEX / EAC / SIL1	

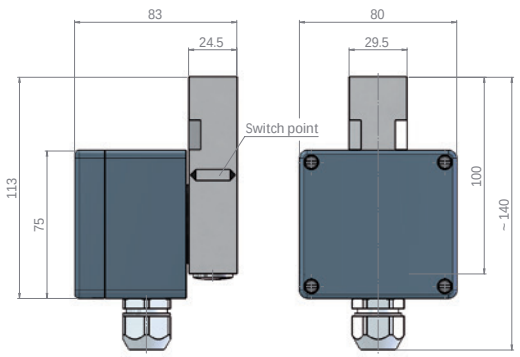

The top mounted level indicator are based on a modular design and can be arranged individually.
Type key page 332 - 336

Heinrich Kübler AG
Ruessenstrasse 4 | CH-6340 Baar | Phone +41 (0)41 766 62 62 | Fax +41 (0)41 766 62 63 | E-Mail info@kubler.ch | Internet www.kubler.ch

Type	**ALDAU/../EXDG**
Housing:	Aluminium coated RAL 9006
Cable entry:	M20 x 1.5
Ingress protection class:	IP 65
Mounting:	Free positionable on the chamber
Ambient temperature:	-40°C ... 100°C

Switch function

Function:	Change over (SPDT)
Switch behaviour:	Bistable
Switching capacity:	U_N 250 V / P_{SN} 50 W/VA / P_{FN} 700 mW
- NAMUR EN 60947:	U_N 15 VDC / I_N 60 mA
- with resistor:	U_N 250 V / I_N 100 mA
Switching hysteresis:	5 mm ... 7 mm

Options

- Switch option .. /R22:	Resistor 22 Ohm / 0.21 W
- Switch option .. /N:	NAMUR EN 60947

Approvals / Certificates

ATEX / EAC / SIL1

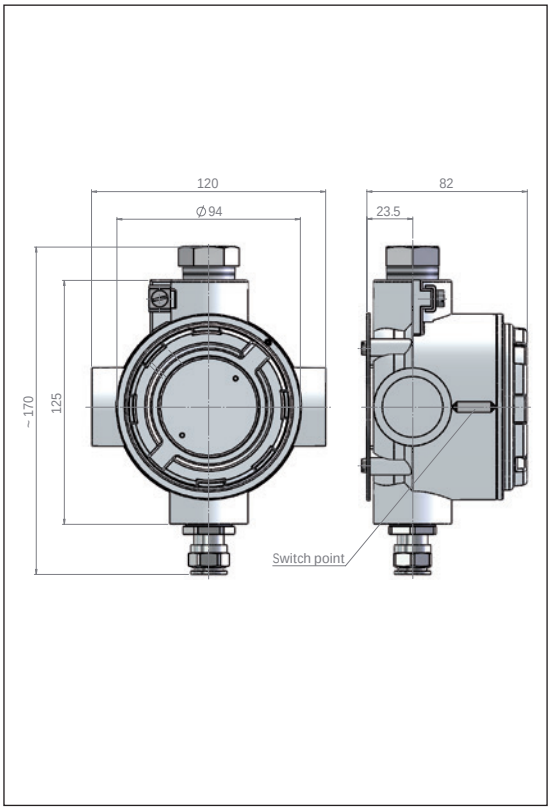

The top mounted level indicator are based on a modular design and can be arranged individually.
Type key page 332 - 336

Heinrich Kübler AG
Ruessenstrasse 4 | CH-6340 Baar | Phone +41 (0)41 766 62 62 | Fax +41 (0)41 766 62 63 | E-Mail info@kubler.ch | Internet www.kubler.ch

Type	**AIT** **AHT**

Armaflex isolation AIT

Material quality:	Cellular plastic based on synthetic rubber
Fire behaviour:	Self-extinguishing, not drippy, not flammable
Nominal thickness:	32 mm
Ambient temperature:	-50°C ... 105°C
UV-resistance:	No
Approvals:	-

Armaflex isolation AHT

Material quality:	Cellular plastic based on synthetic rubber
Fire behaviour:	Self-extinguishing, not drippy, not flammable
Nominal thickness:	25 mm
Ambient temperature:	-50°C ... 150°C
UV-resistance:	Yes
Approvals:	-

Type	**H..A** **H..B**

Self-regulating antifreeze heat tracing

Type:	H75A H75B acc. to EExe / T4
Terminal box:	GFK black with cable entry M25
Protective shell:	Fluorpolymer
Power supply:	230V AC
Power output:	76 W/m at 10°C
Holding temperature:	~10°C / Frost protection (32 mm Isolation necessary)
Steam-flushing:	No
Ambient temperature:	-40°C ... 75°C
Approvals / Certificates:	ATEX

Self-regulating antifreeze heat tracing

Type:	H150A H150B acc. to EExe / T2
Terminal box:	GFK black with cable entry M25
Protective shell:	Fluorpolymer
Power supply:	230V AC
Power output:	50 W/m at 10°C
Holding temperature:	~10°C / Frost protection (32 mm Isolation necessary)
Steam-flushing:	Yes
Ambient temperature:	-40°C ... 150°C
Approvals / Certificates:	ATEX

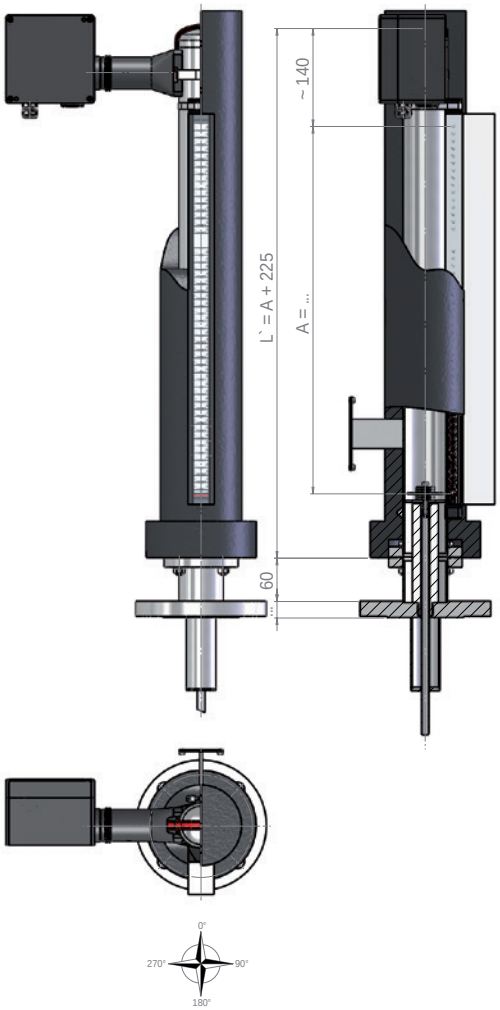

Approvals / Certificates

The top mounted level indicator are based on a modular design and can be arranged individually.
Type key page 332 - 336

Heinrich Kübler AG
Ruessenstrasse 4 | CH-6340 Baar | Phone +41 (0)41 766 62 62 | Fax +41 (0)41 766 62 63 | E-Mail info@kubler.ch | Internet www.kubler.ch

Type	SW
Rock-wool isolation SW	
Material quality:	Rock-woll with crome-nickel cover (Removable)
Nominal thickness:	~50 mm
Ambient temperature:	-50°C ... 750°C
UV-resistance:	Yes
Approvals:	ATEX

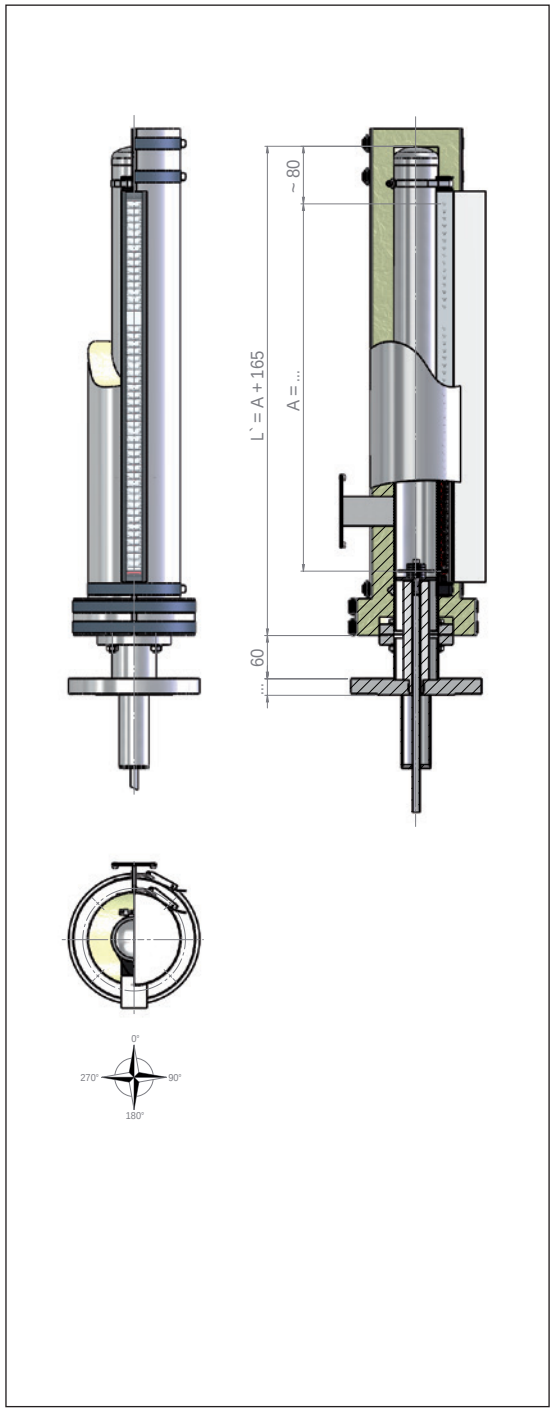

Approvals / Certificates

The top mounted level indicator are based on a modular design and can be arranged individually.
Type key page 332 - 336

Heinrich Kübler AG
Ruessenstrasse 4 | CH-6340 Baar | Phone +41 (0)41 766 62 62 | Fax +41 (0)41 766 62 63 | E-Mail info@kubler.ch | Internet www.kubler.ch

Continuous display and monitoring of fluid levels

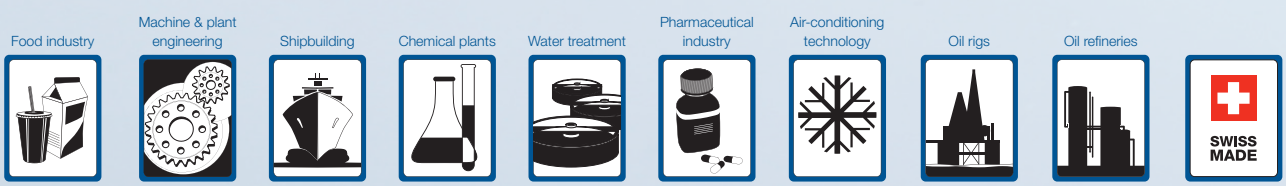

1016-MINI

TOP MOUNTED LEVEL INDICATOR-MINI

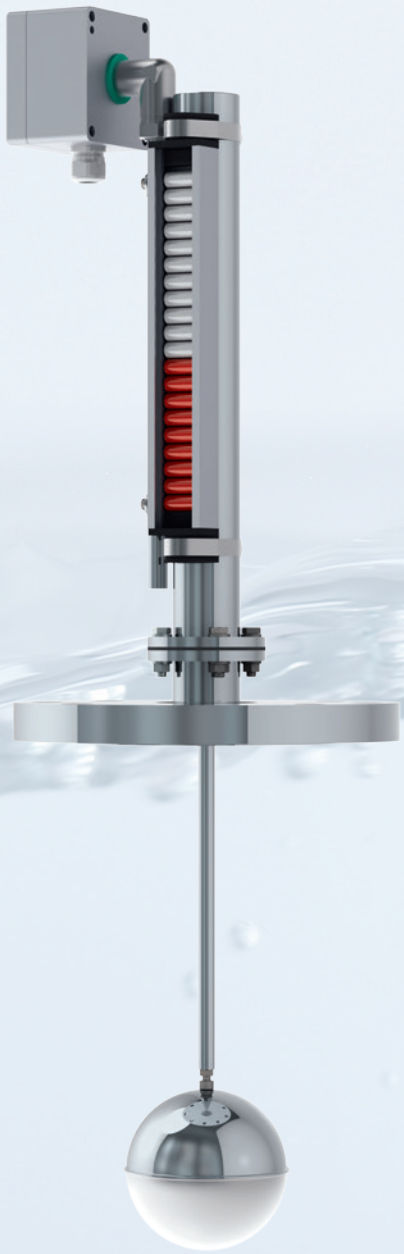

Table of content

Top Mounted Level Indicator-Mini / Content ... 384
Top Mounted Level Indicator-Mini / Functional description ... 385
Top Mounted Level Indicator-Mini / Type key ... 386
Top Mounted Level Indicator-Mini / Type key ... 387
Top Mounted Level Indicator-Mini / Type key ... 388
Top Mounted Level Indicator-Mini / Type key ... 389
Top Mounted Level Indicator-Mini / Type key ... 390
Top Mounted Level Indicator-Mini / Type key ... 391
Top Mounted Level Indicator-Mini / Stainless steel ... 392
Top Mounted Level Indicator-Mini / Stainless steel with stilling well ... 393
Top Mounted Level Indicator-Mini / Stainless steel ... 394
Top Mounted Level Indicator-Mini / Stainless steel with stilling well ... 395
Top Mounted Level Indicator-Mini / Ball float ... 396
Top Mounted Level Indicator-Mini / Ball float ... 397
Top Mounted Level Indicator-Mini / Ball float ... 398
Top Mounted Level Indicator-Mini / Cylindrical float ... 399
Top Mounted Level Indicator-Mini / Cylindrical float ... 400
Top Mounted Level Indicator-Mini / Cylindrical float ... 401
Top Mounted Level Indicator-Mini / Cylindrical float ... 402
Top Mounted Level Indicator-Mini / Cylindrical float ... 403
Top Mounted Level Indicator-Mini / Cylindrical float ... 404
Top Mounted Level Indicator-Mini / Cylindrical float ... 405
Top Mounted Level Indicator-Mini / Cylindrical float ... 406
Top Mounted Level Indicator-Mini / Cylindrical float ... 407
Top Mounted Level Indicator-Mini / Magnetic roller indicator ... 408
Top Mounted Level Indicator-Mini / Scale ... 409
Top Mounted Level Indicator-Mini / Level transmitter ... 410
Top Mounted Level Indicator-Mini / Level transmitter ... 411
Top Mounted Level Indicator-Mini / Level transmitter ... 412
Top Mounted Level Indicator-Mini / Level transmitter ... 413
Top Mounted Level Indicator-Mini / Level transmitter ... 414
Top Mounted Level Indicator-Mini / Level transmitter ... 415
Top Mounted Level Indicator-Mini / Magnetic switch ... 416
Top Mounted Level Indicator-Mini / Magnetic switch ... 417
Top Mounted Level Indicator-Mini / Magnetic switch ... 418
Top Mounted Level Indicator-Mini / Magnetic switch ... 419
Top Mounted Level Indicator-Mini / Isolation / Heat tracing ... 420
Top Mounted Level Indicator-Mini / Isolation ... 421

Heinrich Kübler AG
Ruessenstrasse 4 | CH-6340 Baar | Phone +41 (0)41 766 62 62 | Fax +41 (0)41 766 62 63 | E-Mail info@kubler.ch | Internet www.kubler.ch

Functional description

Top mounted level indicators form an integral part of the pressure vessel. Via a process connection a standpipe is mounted on top of a tank or a vessel.

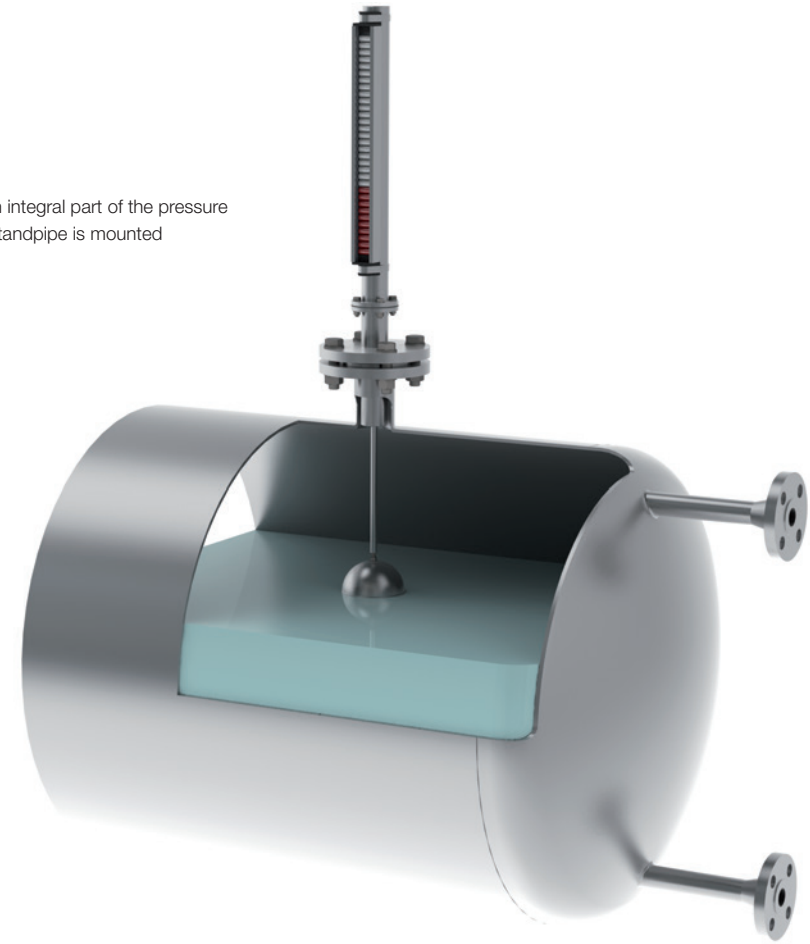

The top mounted pipe contains a magnetic system which is connected to a float and buoyancy rod system. The concentrated magnetic field of the permanent magnet transmits the liquid level of the tank below in proportion to the filling height in a contactless way through the wall of the top-mounted standpipe onto externally mounted displaying, recording and switching elements.

Design limits

Specific gravity:	≥ 300 kg/m³
Design pressure:	-1 bar ... 6 bar
Design temperature:	-196°C ... 150°C

Code 1

	Key 1 ... - **Version**
UNA[1]	Top mounted level indicator
UMG[1]	Top mounted level indicator with level transmitter

Code 2

	Key 1 (for process connection flange) ... - **Flange connection**		Key 1 (for process connection other) ... - **Other process connection**
FE[1]	Flange according to EN	GN[1]	Male thread G
FA[1]	Flange according to ANSI	NPTN[1]	Male thread NPT
F[1]	Flange according to …		
FS[1]	Flange according to drawing		

Code 3

	Key 1.1 (only for flange) ... / ... / ... - **Flange connection**		Key 1.2 (only for flange) ... / ... / ... - **Flange connection**		Key 1.3 (only for flange) ... / ... / ... - **Flange connection**
…	Flange nominal bore	…	Flange pressure rating	…	Flange facing

Code 3

	Key 1 (for process connection other) ... - **Size**
…	Threaded connection size

Example

Code	**1**		**2**		**3**						**4**														**5**		**6**				**7**				
Key	1	-	1	-	1.1	/	1.2	/	1.3	-	1	/	2	/	3	/	4	/	5	/	6	/	7	/	8	-	1	-	1	/	2	-	1	/	2	/	3	-
Example	UMG	-	FE	-	25	/	16	/	B1	-	ALF	/	TP43B	/	V	/	K5	/							EXIAG	-	DU	-	L...	/	A...	-	V	/	40	/	2	-

Black = not possible according to Atex / Blue = possible according to Atex Exia / Blue[1] = possible according to Atex Exia and Exd / Black[1] = possible according to Atex Exd

Heinrich Kübler AG
Ruessenstrasse 4 | CH-6340 Baar | Phone +41 (0)41 766 62 62 | Fax +41 (0)41 766 62 63 | E-Mail info@kubler.ch | Internet www.kubler.ch

Code 4

	Key 1 ... / ... / ... / ... / ... / ... / ... / ... - **Electrical connection level transmitter**		Key 2 ... / ... / ... / ... / ... / ... / ... / ... - **Control unit**		Key 3 ... / ... / ... / ... / ... / ... / ... / ... - **Level transmitter tube material quality**
ALE	Aluminium terminal box 64 x 58 x 34 mm	TP43A[1]	TP5343A	V[1]	Stainless steel
	(only without control unit)	TP43B[1]	TP5343B Ex		
ALF	Aluminium terminal box 80 x 75 x 57 mm	TD35A[1]	TD5335A		
ALDA[1]	Aluminium terminal box Ø 95 x 84 mm	TD35B[1]	TD5335D Ex		
AVA	Stainless steel terminal box Ø 82 x 110 mm	TP50AP[1]	TP5350AP / PROFIBUS® PA		
AVDA[1]	Stainless steel terminal box Ø 82 x 110 mm	TP50BP[1]	TP5350BP Ex / PROFIBUS® PA		
AVM	Stainless steel terminal box Ø 50 x 117 mm	TP50AF[1]	TP5350AF / FOUNDATION™ Fieldbus		
AVDM[1]	Stainless steel terminal box Ø 169 x 117 mm	TP50BF[1]	TP5350BF Ex / FOUNDATION™ Fieldbus		
DAAVDM[1]	Stainless steel terminal box with	TMT181A[1]	TMT181		
	LED display Ø 169 x 117 mm	TMT181B[1]	TMT181 Ex		
APA	Polyester terminal box 80 x 75 x 55 mm	ZMU[1]	XT42SI Ex		
APB	Polyester terminal box 80 x 75 x 55 mm / Exm	TAMX[1]	Other control unit		
ABA	ABS terminal box 80 x 82 x 55 mm	MST[1]	Magnetostrictive / 4 ... 20 mA		
K	Connection cable	MSTB[1]	Magnetostrictive / 4 ... 20 mA / Ex		
K68	Connection cable IP 68 (≥ G 3/8")	MSTH[1]	Magnetostrictive / HART®-Protocol		
DAALA	Aluminium terminal box with	MSTHB[1]	Magnetostrictive / HART®-Protocol / Ex		
	LED display Ø 82 x 100 mm				
DAAVDA[1]	Stainless steel terminal box with				
	LED display Ø 82 x 100 mm				

Code 4

	Key 4 ... / ... / ... / ... / ... / ... / ... / ... - **Accuracy**		Key 5 (only for connection cable) ... / ... / ... / ... / ... / ... / ... / ... - **Length of cable**		Key 6 (only for connection cable) ... / ... / ... / ... / ... / ... / ... / ... - **Connection cable**
K5[1]	Accuracy 5 mm / -30 ... 130°C	...	Length of cable in meter	PVC[1]	PVC connection cable
K5HTF[1]	Accuracy 5 mm / -30 ... 200°C			PVCB[1]	PVC connection cable with blue coating
K5HT[1]	Accuracy 5 mm / -40 ... 250°C			SIL[1]	Silicone connection cable
K10[1]	Accuracy 10 mm / -30 ... 130°C			PUR[1]	PUR connection cable
K10HTF[1]	Accuracy 10 mm / -30 ... 200°C			RAD[1]	Radox connection cable
K10HT[1]	Accuracy 10 mm / -40 ... 250°C				
K15[1]	Accuracy 15 mm / -30 ... 130°C				
K15HTF[1]	Accuracy 15 mm / -30 ... 200°C				
K15HT[1]	Accuracy 15 mm / -40 ... 250°C				
K1[1]	Accuracy 0.2 mm / -40 ... 125°C				
K1HT[1]	Accuracy 0.2 mm / -40 ... 250°C				

Code 4

	Key 7 (only for connection cable) ... / ... / ... / ... / ... / ... / ... / ... - **Connection cable option**		Key 8 ... / ... / ... / ... / ... / ... / ... / ... - **Approvals level transmitter**
KA[1]	Shielded	EXIAG	Acc. to Exia, atmosphere gas
KB[1]	Shielded / oil-resistant	EXIAGD	Acc. to Exia, atmosphere gas and dust
KC[1]	Shielded / oil-resistant / halogen-free	EXDG[1]	Acc. to Exd, atmosphere gas
KD[1]	Oil-resistant	EXDGD[1]	Acc. to Exd, atmosphere gas and dust
KE[1]	Oil-resistant / halogen-free	EXIADG[1]	Acc. to Exia and Exd, atmosphere gas
KF[1]	Halogen-free	EXIADGD[1]	Acc. to Exia and Exd, atmosphere gas and dust

Example

8			9							10			11	12		13		**Code**
1	2	3	1	2	3	4	5	6	7	1	2	3	1	1	2	1	2	**Key**
MNB	SA1		3	RU40	N	1	PVCB	KA	EXIAG	USV	98					EX	PEDII	**Example**

Black = not possible according to Atex / Blue = possible according to Atex Exia / Blue[1] = possible according to Atex Exia and Exd / Black[1] = possible according to Atex Exd

Heinrich Kübler AG
Ruessenstrasse 4 | CH-6340 Baar | Phone +41 (0)41 766 62 62 | Fax +41 (0)41 766 62 63 | E-Mail info@kubler.ch | Internet www.kubler.ch

Code 5

	Key 1 ... - **Electrical connection position of the level transmitter**
DO[1]	Electrical connection top mounted
DU[1]	Electrical connection bottom mounted

Code 6

	Key 1 ... / ... - **Length of instrument**		Key 2 ... / ... - **Display indication range**
L...[1]	Length of instrument in mm	A...[1]	Display indication range in mm

Code 7

	Key 1 ... / ... / ... - **Chamber material quality**		Key 2 ... / ... / ... - **Chamber outside diameter**		Key 3 ... / ... / ... - **Chamber wall thickness**
V[1]	Stainless steel	40[1]	Ø 40.00 mm	2.00[1]	Chamber wall thickness in mm

Code 8

	Key 1 ... / ... / ... - **Magnetic roller indicator**		Key 2 ... / ... / ... - **Scale**		Key 3 ... / ... / ... - **Mag. roller indicator sight extension**
MNA	Magnetic roller indicator MNA	SAK	Scale in Aluminium with adhesive foil	PV[1]	Acryl glass extension
MNB[1]	Magnetic roller indicator MNB (Ex)	SA0[1]	Scale in Aluminium without engraving		
MNAN	Mag. roller indicator MNAN over-roll-protected	SA1[1]	Scale in Aluminium with engraving in %		
MNBN[1]	Mag. roller indicator MNBN over-roll-prot. (Ex)	SA2[1]	Scale in Aluminium with engraving in cm		
MNAV	Magnetic roller indicator MNAV	SA3[1]	Scale in Aluminium with engraving in inch.		
MNBV[1]	Magnetic roller indicator MNBV (Ex)	SA4[1]	Scale in Aluminium with engraving acc. to customized table		
MNAVN	Magnetic roller indicator MNAVN over-roll-prot.	SV0[1]	Scale in Stainless steel without engraving		
MNBVN[1]	Mag. roller indicator MNBVN over-roll-prot. (Ex)	SV1[1]	Scale in Stainless steel with engraving in %		
		SV2[1]	Scale in Stainless steel with engraving in cm		
		SV3[1]	Scale in Stainless steel with engraving in inch.		
		SV4[1]	Scale in Stainless steel with engraving acc. to customized table		

Code 9

	Key 1 ... / ... / ... / ... / ... / ... / ... - **Number of magnetic switches**		Key 2 ... / ... / ... / ... / ... / ... / ... - **Magnetic switch**		Key 3 ... / ... / ... / ... / ... / ... / ... - **Magnetic switch option**
...	Number of magnetic switches	RU40	Magnetic switch RU40	R22[1]	Switch protective circuit with 22 ohm / 0.21 W resistor
		RUD40[1]	Magnetic switch RUD40	N[1]	Switch protective circuit according to NAMUR EN 60947
		RUV40	Magnetic switch RUV40		
		RUVD40[1]	Magnetic switch RUVD40		
		ALERU40	Magnetic switch ALERU40		
		ALFRU40	Magnetic switch ALFRU40		

Example

Code	1		2		3								4																5		6				7				
Key	1	-	1	-	1.1	/	1.2	/	1.3	-	1	/	2	/	3	/	4	/	5	/	6	/	7	/	8	-	1	-	1	/	2	-	1	/	2	/	3	-
Example	UMG	-	FE	-	25	/	16	/	B1	-	ALF	/	TP43B	/	V	/	K5	/							EXIAG	-	DU	-	L...	/	A...	-	V	/	40	/	2	-

Black = not possible according to Atex / Blue = possible according to Atex Exia / Blue[1] = possible according to Atex Exia and Exd / Black[1] = possible according to Atex Exd

Heinrich Kübler AG
Ruessenstrasse 4 | CH-6340 Baar | Phone +41 (0)41 766 62 62 | Fax +41 (0)41 766 62 63 | E-Mail info@kubler.ch | Internet www.kubler.ch

Code 9

	Key 4 … / … / … / … / … / … / … - **Length of cable**		Key 5 … / … / … / … / … / … / … - **Connection cable**		Key 6 … / … / … / … / … / … / … - **Connection cable option**
…	Length of cable in meter	PVC[1]	PVC connection cable	KA[1]	Shielded
		PVCB[1]	PVC connection cable with blue coating	KB[1]	Shielded / oil-resistant
		SIL[1]	Silicone connection cable	KC[1]	Shielded / oil-resistant / halogen-free
		PUR[1]	PUR connection cable	KD[1]	Oil-resistant
		RAD[1]	Radox connection cable	KE[1]	Oil-resistant / halogen-free
				KF[1]	Halogen-free

Code 9

	Key 7 … / … / … / … / … / … / … - **Approvals magnetic switch**
EXIAG	Acc. to Exia, atmosphere gas
EXIAGD	Acc. to Exia, atmosphere gas and dust
EXDG[1]	Acc. to Exd, atmosphere gas
EXDGD[1]	Acc. to Exd, atmosphere gas and dust
EXIADG[1]	Acc. to Exia and Exd, atmosphere gas
EXIADGD[1]	Acc. to Exia and Exd, atmosphere gas and dust

Code 10

	Key 1 … / … / … - **Float**		Key 2 … / … / … - **Diameter**		Key 3 … / … / … - **Float length**
USV[1]	Float in Stainless steel (Key 3 not applicable)	…	Acc. to float table on page 396 - 407	…	Acc. to float table on page 396 - 407
UZVS[1]	Float in Stainless steel				
UZTIS[1]	Float in Titanium				

Code 11

	Key 1 … - **Stilling well**
60[1]	Ø 60.30 mm
73[1]	Ø 73.03 mm
88[1]	Ø 88.90 mm
114[1]	Ø 114.30 mm

Code 12

	Key 1 … / … - **Instrument isolation**		Key 2 … / … - **Electrical heat tracing**
AIT	Armaflex isolation AIT	H75A	Electrical heat tracing 75°C
AHT	Armaflex isolation AHT	H75B	Electrical heat tracing 75°C acc. to EExe
SW	Rock-wool isolation	H150A	Electrical heat tracing 150°C
		H150B	Electrical heat tracing 150°C acc. to EExe

Example

8			9							10			11	12		13		**Code**
1	2	3	1	2	3	4	5	6	7	1	2	3	1	1	2	1	2	**Key**
MNB	SA1		3	RU40	N	1	PVCB	KA	EXIAG	USV	98					EX	PEDII	**Example**

Black = not possible according to Atex / Blue = possible according to Atex Exia / Blue[1] = possible according to Atex Exia and Exd / Black[1] = possible according to Atex Exd

Heinrich Kübler AG
Ruessenstrasse 4 | CH-6340 Baar | Phone +41 (0)41 766 62 62 | Fax +41 (0)41 766 62 63 | E-Mail info@kubler.ch | Internet www.kubler.ch

Code 13

	Key 1 … / … / … - **Approvals / 1**		Key 2 … / … / … - **Approvals / 2**		
EX	Acc. to Ex	PEDII[1] PEDIV[1]	Acc. to PED 97/23/EC category II Acc. to PED 97/23/EC category IV	EAC1[1]	Approval EAC TR CU 004/2011 & 012/2011 & 020/2011

Example

Code	**1**		**2**		**3**						**4**												**5**		**6**				**7**				
Key	1	-	1	-	1.1	/	1.2	/	1.3	-	1	/	2	/	3	/	4	/	5	/	6	/	7	/	8	-	1	-	1	/	2	-	1	/	2	/	3	-
Example	UMG	-	FE	-	25	/	16	/	B1	-	ALF	/	TP43B	/	V	/	K5	/							EXIAG	-	DU	-	L…	/	A…	-	V	/	40	/	2	-

Black = not possible according to Atex / Blue = possible according to Atex Exia / Blue[1] = possible according to Atex Exia and Exd / Black[1] = possible according to Atex Exd

Heinrich Kübler AG
Ruessenstrasse 4 | CH-6340 Baar | Phone +41 (0)41 766 62 62 | Fax +41 (0)41 766 62 63 | E-Mail info@kubler.ch | Internet www.kubler.ch

Notes

Example

8						9															10						11		12				13			Code
1	/	2	/	3	-	1	/	2	/	3	/	4	/	5	/	6	/	7	-	1	/	2	/	3	-	1	-	1	/	2	-	1	/	2		**Key**
MNB	/	SA1			-	3	/	RU40	/	N	/	1	/	PVCB	/	KA		EXIAG	-	USV	/	98			-		-				-	EX	/	PEDII		**Example**

Black = not possible according to Atex / Blue = possible according to Atex Exia / Blue[1] = possible according to Atex Exia and Exd / Black[1] = possible according to Atex Exd

Type **UNA-..-../../..-L..-V/40/..-MN..-UZ..S/..**

Material quality:	1.4404 / 1.4435 / 1.4571 (316L / 316Ti)
Length of instrument:	400 ... 6000 mm
Specific gravity:	≥ 400 kg/m³
Design pressure:	-1 bar ... 6 bar
Design temperature:	-10°C ... 150°C (optional -196°C)

Design

Chamber:	Ø 40.00 x 2.00 mm
Process connection:	Type key page 386
Chamber end top:	Tube plate
Chamber end bottom:	-
Float:	Page 399 - 407

Option magnetic roller indicator / Page 408

Aluminium or Stainless steel / Pocan	-40°C ... 200°C
Maximum indicating range:	A = L - float length - (F)

Option scale / Page 409

Aluminium / Stainless steel	With adhesive foil / Engraving / Blank

Option magnetic switch / Page 416 - 419

Aluminium / Stainless steel	-40°C ... 150°C

Option level transmitter / Page 410 - 414

Accuracy / Reed contacts:	5 / 10 / 15 mm
Accuracy / Magnetostrictive:	0.2 mm
Control unit:	- Programmable - Hart-programmable / SIL2 - Profibus PA - Foundation Fieldbus

Option electrical heat tracing / Page 420

Holding temperature:	~10°C / Frost protection

Option instrument isolation / Page 420 - 421

Isolation:	Armaflex isolation / Rock-wool isolation

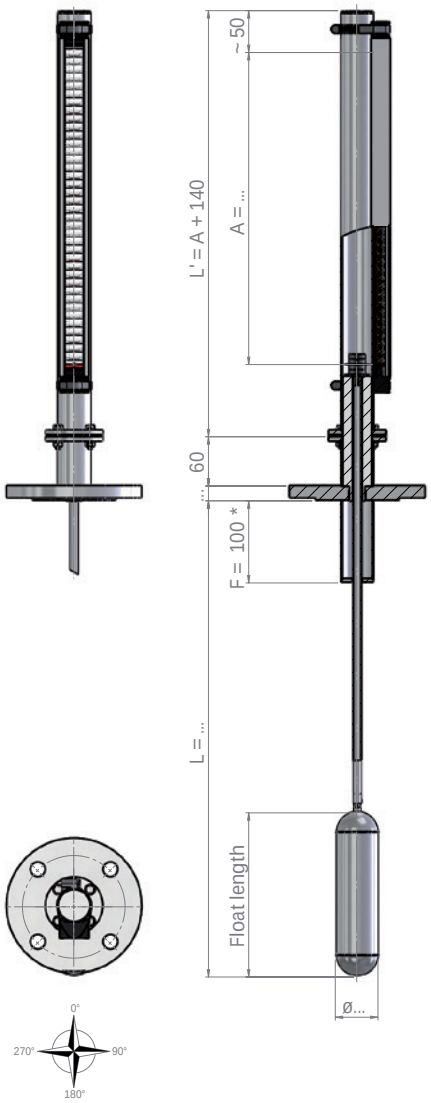

* If instrument length L > 1000 mm guidance tube to be used

Approvals / Certificates

ATEX*

II 1G2D/2GD c II 2GD c

Liquid temperature Ex max. 150°C

The top mounted level indicator-mini are based on a modular design and can be arranged individually.
Type key page 386 - 390

* = The approval is dependent on the equipment combination

Heinrich Kübler AG
Ruessenstrasse 4 | CH-6340 Baar | Phone +41 (0)41 766 62 62 | Fax +41 (0)41 766 62 63 | E-Mail info@kubler.ch | Internet www.kubler.ch

Type **UNA-..-../../..-L..-V/40/..-MN-UZ..S/..-..**

Material quality:	1.4404 / 1.4435 / 1.4571 (316L / 316Ti)
Length of instrument:	400 ... 6000 mm
Specific gravity:	≥ 400 kg/m³
Design pressure:	-1 bar ... 6 bar
Design temperature:	-10°C ... 150°C (optional -196°C)

Design

Chamber:	Ø 40.00 x 2.00 mm
Stilling well:	Type key page 389
Process connection:	Type key page 386
Chamber end top:	Tube plate
Chamber end bottom:	-
Float:	Page 399 - 407

Option magnetic roller indicator / Page 408

Aluminium or Stainless steel / Pocan	-40°C ... 200°C
Maximum indicating range:	A = L - float length

Option scale / Page 409

Aluminium / Stainless steel	With adhesive foil / Engraving / Blank

Option magnetic switch / Page 416 - 419

Aluminium / Stainless steel	-40°C ... 150°C

Option level transmitter / Page 410 - 414

Accuracy / Reed contacts:	5 / 10 / 15 mm
Accuracy / Magnetostrictive:	0.2 mm
Control unit:	- Programmable - Hart-programmable / SIL2 - Profibus PA - Foundation Fieldbus

Option electrical heat tracing / Page 420

Holding temperature:	~10°C / Frost protection

Option instrument isolation / Page 420 - 421

Isolation:	Armaflex isolation / Rock-wool isolation

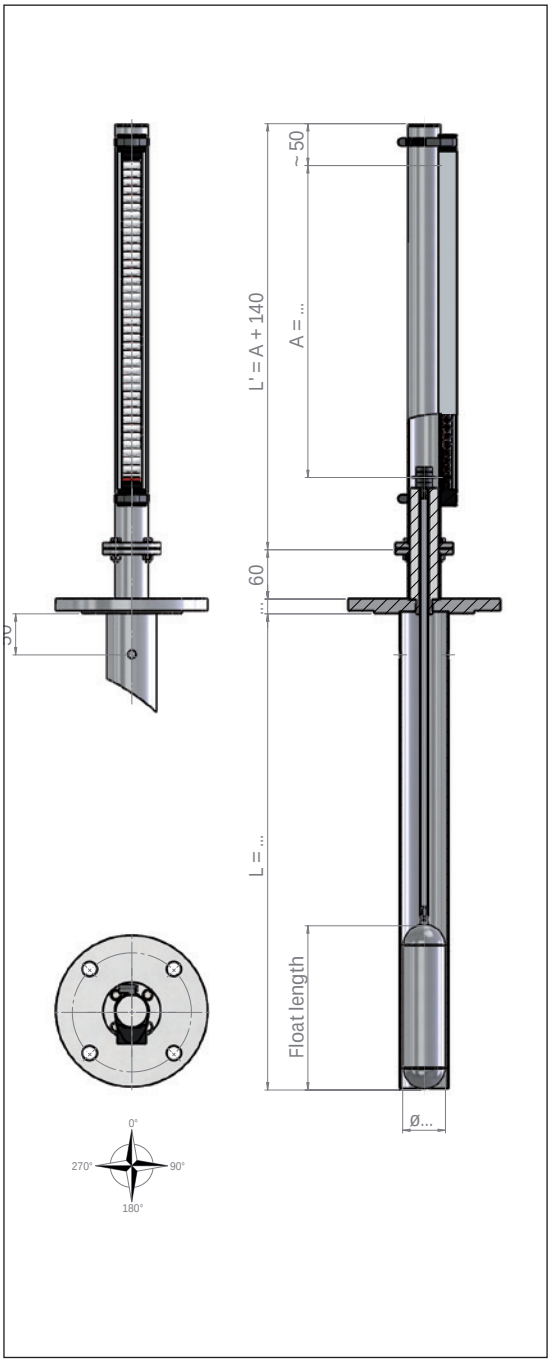

Approvals / Certificates

ATEX*

II 1G2D/2GD c II 2GD c

Liquid temperature Ex max. 150°C

The top mounted level indicator-mini are based on a modular design and can be arranged individually.
Type key page 386 - 390

* = The approval is dependent on the equipment combination

Heinrich Kübler AG
Ruessenstrasse 4 | CH-6340 Baar | Phone +41 (0)41 766 62 62 | Fax +41 (0)41 766 62 63 | E-Mail info@kubler.ch | Internet www.kubler.ch

Type **UNA-..-../../..-L..-V/40/..-MN..-USV../..**

Material quality:	1.4404 / 1.4435 / 1.4571 (316L / 316Ti)
Length of instrument:	400 ... 6000 mm
Specific gravity:	≥ 300 kg/m³
Design pressure:	-1 bar ... 6 bar
Design temperature:	-10°C ... 150°C (optional -196°C)

Design

Chamber:	Ø 40.00 x 2.00 mm
Process connection:	Type key page 386
Chamber end top:	Tube plate
Chamber end bottom:	-
Float:	Page 396 - 398

Option magnetic roller indicator / Page 408

Aluminium or Stainless steel / Pocan	-40°C ... 200°C
Maximum indicating range:	A = L - float length - (F)

Option scale / Page 409

Aluminium / Stainless steel	With adhesive foil / Engraving / Blank

Option magnetic switch / Page 416 - 419

Aluminium / Stainless steel	-40°C ... 150°C

Option level transmitter / Page 410 - 414

Accuracy / Reed contacts:	5 / 10 / 15 mm
Accuracy / Magnetostrictive:	0.2 mm
Control unit:	- Programmable - Hart-programmable / SIL2 - Profibus PA - Foundation Fieldbus

Option electrical heat tracing / Page 420

Holding temperature:	~10°C / Frost protection

Option instrument isolation / Page 420 - 421

Isolation:	Armaflex isolation / Rock-wool isolation

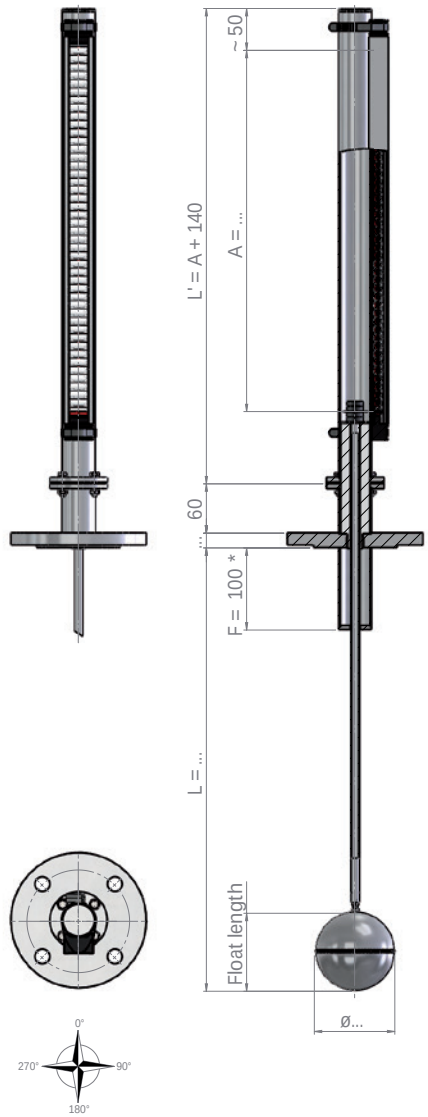

* If instrument length L > 1000 mm guidance tube to be used

Approvals / Certificates

ATEX*

II 1G2D/2GD c II 2GD c

Liquid temperature Ex max. 150°C

The top mounted level indicator-mini are based on a modular design and can be arranged individually.
Type key page 386 - 390

* = The approval is dependent on the equipment combination

Heinrich Kübler AG
Ruessenstrasse 4 | CH-6340 Baar | Phone +41 (0)41 766 62 62 | Fax +41 (0)41 766 62 63 | E-Mail info@kubler.ch | Internet www.kubler.ch

Type **UNA-..-../../..-L..-V/40/..-MN..-USV..-..**

Material quality:	1.4404 / 1.4435 / 1.4571 (316L / 316Ti)
Length of instrument:	400 ... 6000 mm
Specific gravity:	≥ 300 kg/m³
Design pressure:	-1 bar ... 6 bar
Design temperature:	-10°C ... 150°C (optional -196°C)

Design

Chamber:	Ø 40.00 x 2.00 mm
Stilling well:	Type key page 389
Process connection:	Type key page 386
Chamber end top:	Tube plate
Chamber end bottom:	-
Float:	Page 396 - 398

Option magnetic roller indicator / Page 408

Aluminium or Stainless steel / Pocan	-40°C ... 200°C
Maximum indicating range:	A = L - float length

Option scale / Page 409

Aluminium / Stainless steel	With adhesive foil / Engraving / Blank

Option magnetic switch / Page 416 - 419

Aluminium / Stainless steel	-40°C ... 150°C

Option level transmitter / Page 410 - 414

Accuracy / Reed contacts:	5 / 10 / 15 mm
Accuracy / Magnetostrictive:	0.2 mm
Control unit:	- Programmable - Hart-programmable / SIL2 - Profibus PA - Foundation Fieldbus

Option electrical heat tracing / Page 420

Holding temperature:	~10°C / Frost protection

Option instrument isolation / Page 420 - 421

Isolation:	Armaflex isolation / Rock-wool isolation

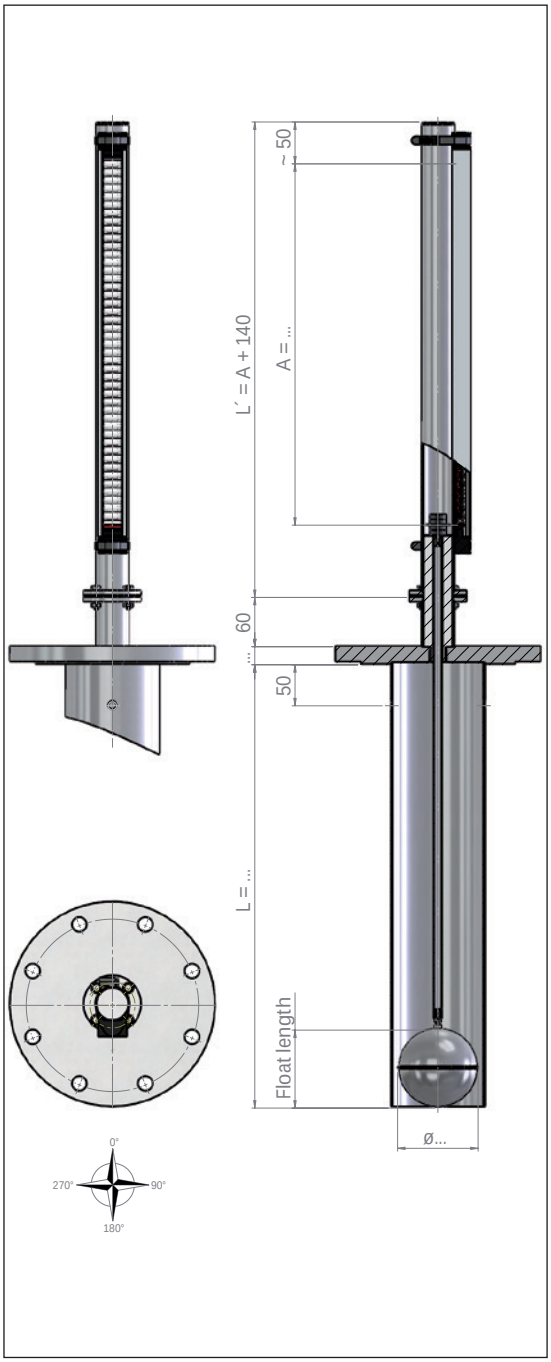

Approvals / Certificates

ATEX*

II 1G2D/2GD c II 2GD c

Liquid temperature Ex max. 150°C

The top mounted level indicator-mini are based on a modular design and can be arranged individually.
Type key page 386 - 390

* = The approval is dependent on the equipment combination

Heinrich Kübler AG
Ruessenstrasse 4 | CH-6340 Baar | Phone +41 (0)41 766 62 62 | Fax +41 (0)41 766 62 63 | E-Mail info@kubler.ch | Internet www.kubler.ch

Ball float **USV/98** **Stainless steel 1.4571 (316Ti)**

Diameter / hight [mm]:	98 / 95
Design temperature [°C]:	-196 ... 200
Design pressure [bar]:	-1 ... 16
Weight [g]:	180
Flange min.:	DN 100

Float USV/98

Specific gravity of the liquid [kg/m³]	300	400	500	600	700	800	900	1000	1100	1200	1300	1400	1500
L-Mass [mm]	Immersion depth [%]												
400¹	-	-	-	-	80	70	65	60	55	50	50	45	45
500¹	-	-	-	-	-	75	65	60	55	55	50	50	45
600¹	-	-	-	-	-	75	70	65	60	55	50	50	50
700¹	-	-	-	-	-	80	70	65	60	55	55	50	50
800¹	-	-	-	-	-	85	75	65	60	60	55	50	50
900¹	-	-	-	-	-	-	75	70	65	60	55	55	50
1000¹	-	-	-	-	-	-	80	70	65	60	60	55	50
1100²	-	-	-	-	-	-	-	-	-	80	75	70	65
1200²	-	-	-	-	-	-	-	-	-	-	80	75	70
1300²	-	-	-	-	-	-	-	-	-	-	85	75	70
1400²	-	-	-	-	-	-	-	-	-	-	-	80	75
1500²	-	-	-	-	-	-	-	-	-	-	-	85	75

Ball float **USV/105** **Stainless steel 1.4571 (316Ti)**

Diameter / hight [mm]:	105 / 102
Design temperature [°C]:	-196 ... 200
Design pressure [bar]:	-1 ... 25
Weight [g]:	257
Flange min.:	DN 100

Float USV/105

Specific gravity of the liquid [kg/m³]	300	400	500	600	700	800	900	1000	1100	1200	1300	1400	1500
L-Mass [mm]	Immersion depth [%]												
400¹	-	-	-	-	85	75	65	60	55	55	50	50	45
500¹	-	-	-	-	-	75	70	60	60	55	50	50	45
600¹	-	-	-	-	-	80	70	65	60	55	55	50	50
700¹	-	-	-	-	-	80	70	65	60	60	55	50	50
800¹	-	-	-	-	-	85	75	65	60	60	55	50	50
900¹	-	-	-	-	-	-	75	70	65	60	55	55	50
1000¹	-	-	-	-	-	-	80	70	65	60	55	55	50
1100²	-	-	-	-	-	-	-	-	85	75	70	65	65
1200²	-	-	-	-	-	-	-	-	-	80	75	70	65
1300²	-	-	-	-	-	-	-	-	-	85	75	70	65
1400²	-	-	-	-	-	-	-	-	-	-	80	75	70
1500²	-	-	-	-	-	-	-	-	-	-	80	75	70

The top mounted level indicator-mini are based on a modular design and can be arranged individually.
Type key page 386 - 390

¹ = Guidance rod 10 x 0.5 mm / ² = Guidance rod 10 x 1.0 mm / ³ = Guidance rod 16 x 1.0 mm

Heinrich Kübler AG
Ruessenstrasse 4 | CH-6340 Baar | Phone +41 (0)41 766 62 62 | Fax +41 (0)41 766 62 63 | E-Mail info@kubler.ch | Internet www.kubler.ch

Ball float **USV/120** **Stainless steel 1.4571 (316Ti)**

Diameter / hight [mm]:	120 / 116
Design temperature [°C]:	-196 ... 200
Design pressure [bar]:	-1 ... 16
Weight [g]:	220
Flange min.:	DN 125

Float USV/120													
Specific gravity of the liquid [kg/m³]	**300**	**400**	**500**	**600**	**700**	**800**	**900**	**1000**	**1100**	**1200**	**1300**	**1400**	**1500**
L-Mass [mm]	Immersion depth [%]												
400¹	-	-	-	60	55	50	45	45	40	40	35	35	35
500¹	-	-	-	65	55	50	45	45	40	40	40	35	35
600¹	-	-	-	65	55	50	50	45	45	40	40	35	35
700¹	-	-	-	65	60	55	50	45	45	40	40	35	35
800¹	-	-	-	70	60	55	50	45	45	40	40	40	35
900¹	-	-	-	70	60	55	50	50	45	45	40	40	35
1000¹	-	-	-	70	65	55	55	50	45	45	40	40	40
1100²	-	-	-	-	85	70	65	60	55	55	50	50	45
1200²	-	-	-	-	-	75	65	60	60	55	50	50	45
1300²	-	-	-	-	-	80	70	65	60	55	55	50	50
1400²	-	-	-	-	-	80	70	65	60	55	55	50	50
1500²	-	-	-	-	-	-	75	70	65	60	55	55	50
1600²	-	-	-	-	-	-	80	70	65	60	55	55	50
1700²	-	-	-	-	-	-	80	70	65	60	60	55	55
1800²	-	-	-	-	-	-	85	75	70	65	60	55	55
1900²	-	-	-	-	-	-	-	75	70	65	60	60	55
2000²	-	-	-	-	-	-	-	80	75	65	65	60	55

The top mounted level indicator-mini are based on a modular design and can be arranged individually.
Type key page 386 - 390

¹ = Guidance rod 10 x 0.5 mm / ² = Guidance rod 10 x 1.0 mm / ³ = Guidance rod 16 x 1.0 mm

Heinrich Kübler AG
Ruessenstrasse 4 | CH-6340 Baar | Phone +41 (0)41 766 62 62 | Fax +41 (0)41 766 62 63 | E-Mail info@kubler.ch | Internet www.kubler.ch

Ball float **USV/205** **Stainless steel 1.4571 (316Ti)**

Diameter / hight [mm]:	205 / 200
Design temperature [°C]:	-196 ... 200
Design pressure [bar]:	-1 ... 6
Weight [g]:	788
Flange min.:	DN 200

Float USV/205													
Specific gravity of the liquid [kg/m³]	**300**	**400**	**500**	**600**	**700**	**800**	**900**	**1000**	**1100**	**1200**	**1300**	**1400**	**1500**
L-Mass [mm]	Immersion depth [%]												
400¹	65	50	45	40	35	35	30	30	30	25	25	25	25
600¹	65	55	45	40	35	35	30	30	30	25	25	25	25
800¹	65	55	45	40	40	35	30	30	30	30	25	25	25
1000¹	70	55	45	40	40	35	35	30	30	30	25	25	25
1200²	80	60	50	45	40	40	35	35	30	30	30	30	25
1400²	80	65	55	45	45	40	35	35	35	30	30	30	25
1600²	-	65	55	50	45	40	35	35	35	30	30	30	30
1800²	-	65	55	50	45	40	40	35	35	30	30	30	30
2000²	-	70	60	50	45	40	40	35	35	35	30	30	30
2200³	-	-	70	60	55	50	45	45	40	40	35	35	35
2400³	-	-	75	65	55	50	45	45	40	40	40	35	35
2600³	-	-	75	65	60	55	50	45	45	40	40	35	35
2800³	-	-	80	70	60	55	50	45	45	40	40	40	35
3000³	-	-	85	70	60	55	50	50	45	45	40	40	35
3200³	-	-	-	70	65	55	55	50	45	45	40	40	40
3400³	-	-	-	75	65	60	55	50	45	45	45	40	40
3600³	-	-	-	80	65	60	55	50	50	45	45	40	40
3800³	-	-	-	80	70	60	55	55	50	45	45	40	40
4000³	-	-	-	85	70	65	60	55	50	50	45	45	40
4200³	-	-	-	-	75	65	60	55	50	50	45	45	40
4400³	-	-	-	-	75	65	60	55	55	50	45	45	45
4600³	-	-	-	-	80	70	60	60	55	50	50	45	45
4800³	-	-	-	-	80	70	65	60	55	50	50	45	45
5000³	-	-	-	-	85	70	65	60	55	55	50	50	45

The top mounted level indicator-mini are based on a modular design and can be arranged individually.
Type key page 386 - 390

¹ = Guidance rod 10 x 0.5 mm / ² = Guidance rod 10 x 1.0 mm / ³ = Guidance rod 16 x 1.0 mm

Heinrich Kübler AG
Ruessenstrasse 4 | CH-6340 Baar | Phone +41 (0)41 766 62 62 | Fax +41 (0)41 766 62 63 | E-Mail info@kubler.ch | Internet www.kubler.ch

Cylindrical float **UZVS/52/200** **Stainless steel 1.4571 (316Ti)**

Diameter / length [mm]:	52 / 200
Design temperature [°C]:	-196 ... 250
Design pressure [bar]:	-1 ... 16
Weight [g]:	154
Flange min.:	DN 50

Float UZVS/50/200

Specific gravity of the liquid [kg/m³]	300	400	500	600	700	800	900	1000	1100	1200	1300	1400	1500
L-Mass [mm]	Immersion depth [%]												
400¹	-	-	-	-	-	85	75	70	60	55	55	50	45
500¹	-	-	-	-	-	-	80	70	65	60	55	50	50
600¹	-	-	-	-	-	-	80	75	70	60	60	55	50
700¹	-	-	-	-	-	-	85	75	70	65	60	55	55
800¹	-	-	-	-	-	-	-	80	75	65	60	60	55
900¹	-	-	-	-	-	-	-	85	75	70	65	60	55
1000¹	-	-	-	-	-	-	-	-	80	70	65	65	60
1100²	-	-	-	-	-	-	-	-	-	-	-	85	80
1200²	-	-	-	-	-	-	-	-	-	-	-	-	85
1300²	-	-	-	-	-	-	-	-	-	-	-	-	-
1400²	-	-	-	-	-	-	-	-	-	-	-	-	-
1500²	-	-	-	-	-	-	-	-	-	-	-	-	-

Cylindrical float **UZVS/52/250** **Stainless steel 1.4571 (316Ti)**

Diameter / length [mm]:	52 / 250
Design temperature [°C]:	-196 ... 250
Design pressure [bar]:	-1 ... 16
Weight [g]:	191
Flange min.:	DN 50

Float UZVS/52/250

Specific gravity of the liquid [kg/m³]	300	400	500	600	700	800	900	1000	1100	1200	1300	1400	1500
L-Mass [mm]	Immersion depth [%]												
400¹	-	-	-	-	85	75	65	60	55	50	45	45	40
500¹	-	-	-	-	-	80	70	65	60	55	50	45	45
600¹	-	-	-	-	-	80	70	65	60	55	50	50	45
700¹	-	-	-	-	-	85	75	70	60	55	55	50	45
800¹	-	-	-	-	-	-	80	70	65	60	55	50	50
900¹	-	-	-	-	-	-	80	75	65	60	55	55	50
1000¹	-	-	-	-	-	-	85	75	70	65	60	55	50
1100²	-	-	-	-	-	-	-	-	-	85	75	70	65
1200²	-	-	-	-	-	-	-	-	-	-	80	75	70
1300²	-	-	-	-	-	-	-	-	-	-	85	80	75
1400²	-	-	-	-	-	-	-	-	-	-	-	80	75
1500²	-	-	-	-	-	-	-	-	-	-	-	85	80

The top mounted level indicator-mini are based on a modular design and can be arranged individually.
Type key page 386 - 390

¹ = Guidance rod 10 x 0.5 mm / ² = Guidance rod 10 x 1.0 mm / ³ = Guidance rod 16 x 1.0 mm

Cylindrical float **UZVS/52/350** **Stainless steel 1.4571 (316Ti)**

Diameter / length [mm]:	52 / 350
Design temperature [°C]:	-196 ... 250
Design pressure [bar]:	-1 ... 16
Weight [g]:	270
Flange min.:	DN 50

Float UZVS/52/350													
Specific gravity of the liquid [kg/m³]	**300**	**400**	**500**	**600**	**700**	**800**	**900**	**1000**	**1100**	**1200**	**1300**	**1400**	**1500**
L-Mass [mm]	Immersion depth [%]												
400¹	-	-	-	-	75	65	60	55	50	45	40	40	35
500¹	-	-	-	-	75	70	60	55	50	45	45	40	35
600¹	-	-	-	-	80	70	65	55	50	45	45	40	40
700¹	-	-	-	-	80	70	65	60	55	50	45	40	40
800¹	-	-	-	-	85	75	65	60	55	50	45	45	40
900¹	-	-	-	-	-	75	70	60	55	50	50	45	40
1000¹	-	-	-	-	-	80	70	65	60	55	50	45	45
1100²	-	-	-	-	-	-	-	80	70	65	60	55	55
1200²	-	-	-	-	-	-	-	80	75	70	65	60	55
1300²	-	-	-	-	-	-	-	85	80	70	65	60	60
1400²	-	-	-	-	-	-	-	-	80	75	70	65	60
1500²	-	-	-	-	-	-	-	-	85	75	70	65	60
1600²	-	-	-	-	-	-	-	-	-	80	75	70	65
1700²	-	-	-	-	-	-	-	-	-	85	75	70	65
1800²	-	-	-	-	-	-	-	-	-	85	80	75	70
1900²	-	-	-	-	-	-	-	-	-	-	80	75	70
2000²	-	-	-	-	-	-	-	-	-	-	85	80	75

Cylindrical float **UZVS/62/250** **Stainless steel 1.4571 (316Ti)**

Diameter / length [mm]:	62 / 250
Design temperature [°C]:	-196 ... 200
Design pressure [bar]:	-1 ... 6
Weight [g]:	174
Flange min.:	DN 65

Float UZVS/62/250													
Specific gravity of the liquid [kg/m³]	**300**	**400**	**500**	**600**	**700**	**800**	**900**	**1000**	**1100**	**1200**	**1300**	**1400**	**1500**
L-Mass [mm]	Immersion depth [%]												
400¹	-	-	-	-	55	50	45	40	40	35	35	30	30
500¹	-	-	-	-	60	55	45	45	40	35	35	30	30
600¹	-	-	-	-	60	55	50	45	40	40	35	35	30
700¹	-	-	-	-	65	55	50	45	45	40	35	35	30
800¹	-	-	-	-	65	60	55	50	45	40	40	35	35
900¹	-	-	-	-	70	60	55	50	45	40	40	35	35
1000¹	-	-	-	-	70	65	55	50	45	45	40	40	35
1100²	-	-	-	-	-	85	75	70	60	55	55	50	45
1200²	-	-	-	-	-	-	80	70	65	60	55	50	50
1300²	-	-	-	-	-	-	80	75	70	65	60	55	50
1400²	-	-	-	-	-	-	85	80	70	65	60	55	55
1500²	-	-	-	-	-	-	-	80	75	70	65	60	55
1600²	-	-	-	-	-	-	-	85	75	70	65	60	55
1700²	-	-	-	-	-	-	-	-	80	75	70	65	60
1800²	-	-	-	-	-	-	-	-	85	75	70	65	60
1900²	-	-	-	-	-	-	-	-	85	80	75	70	65
2000²	-	-	-	-	-	-	-	-	-	80	75	70	65

The top mounted level indicator-mini are based on a modular design and can be arranged individually.
Type key page 386 - 390

¹ = Guidance rod 10 x 0.5 mm / ² = Guidance rod 10 x 1.0 mm / ³ = Guidance rod 16 x 1.0 mm

Heinrich Kübler AG
Ruessenstrasse 4 | CH-6340 Baar | Phone +41 (0)41 766 62 62 | Fax +41 (0)41 766 62 63 | E-Mail info@kubler.ch | Internet www.kubler.ch

Cylindrical float **UZVS/72/250** **Stainless steel 1.4571 (316Ti)**

Diameter / length [mm]:	72 / 250
Design temperature [°C]:	-196 ... 200
Design pressure [bar]:	-1 ... 10
Weight [g]:	325
Flange min.:	DN 80

Float UZVS/72/250

Specific gravity of the liquid [kg/m³]	300	400	500	600	700	800	900	1000	1100	1200	1300	1400	1500
L-Mass [mm]	Immersion depth [%]												
400¹	-	-	-	-	65	60	55	50	45	40	40	35	35
500¹	-	-	-	-	70	60	55	50	45	40	40	35	35
600¹	-	-	-	-	70	60	55	50	45	45	40	35	35
700¹	-	-	-	-	70	65	55	50	45	45	40	40	35
800¹	-	-	-	-	75	65	60	55	50	45	40	40	35
900¹	-	-	-	-	75	65	60	55	50	45	45	40	40
1000¹	-	-	-	-	75	70	60	55	50	45	45	40	40
1100²	-	-	-	-	-	85	75	65	60	55	55	50	50
1200²	-	-	-	-	-	-	75	70	65	60	55	50	50
1300²	-	-	-	-	-	-	80	70	65	60	55	55	50
1400²	-	-	-	-	-	-	80	75	70	65	60	55	50
1500²	-	-	-	-	-	-	85	75	70	65	60	55	55
1600²	-	-	-	-	-	-	-	80	70	65	60	60	55
1700²	-	-	-	-	-	-	-	80	75	70	65	60	55
1800²	-	-	-	-	-	-	-	85	75	70	65	60	55
1900²	-	-	-	-	-	-	-	-	80	75	65	65	60
2000²	-	-	-	-	-	-	-	-	80	75	70	65	60

Cylindrical float **UZVS/82/250** **Stainless steel 1.4571 (316Ti)**

Diameter / length [mm]:	82 / 250
Design temperature [°C]:	-196 ... 200
Design pressure [bar]:	-1 ... 16
Weight [g]:	370
Flange min.:	DN 100

Float UZVS/82/250

Specific gravity of the liquid [kg/m³]	300	400	500	600	700	800	900	1000	1100	1200	1300	1400	1500
L-Mass [mm]	Immersion depth [%]												
400¹	-	-	-	65	60	50	45	40	40	35	35	30	30
500¹	-	-	-	70	60	50	45	45	40	35	35	30	30
600¹	-	-	-	70	60	55	50	45	40	35	35	35	30
700¹	-	-	-	70	60	55	50	45	40	40	35	35	30
800¹	-	-	-	75	65	55	50	45	40	40	35	35	30
900¹	-	-	-	75	65	55	50	45	45	40	35	35	35
1000¹	-	-	-	75	65	60	50	50	45	40	40	35	35
1100²	-	-	-	-	80	70	65	55	50	50	45	40	40
1200²	-	-	-	-	80	70	65	60	55	50	45	45	40
1300²	-	-	-	-	85	75	65	60	55	50	50	45	40
1400²	-	-	-	-	-	75	70	60	55	55	50	45	45
1500²	-	-	-	-	-	80	70	65	60	55	50	45	45
1600²	-	-	-	-	-	80	75	65	60	55	50	50	45
1700²	-	-	-	-	-	85	75	70	60	55	55	50	45
1800²	-	-	-	-	-	85	75	70	65	60	55	50	50
1900²	-	-	-	-	-	-	80	70	65	60	55	55	50
2000²	-	-	-	-	-	-	80	75	65	60	60	55	50

The top mounted level indicator-mini are based on a modular design and can be arranged individually.
Type key page 386 - 390

¹ = Guidance rod 10 x 0.5 mm / ² = Guidance rod 10 x 1.0 mm / ³ = Guidance rod 16 x 1.0 mm

Cylindrical float **UZVS/82/300** **Stainless steel 1.4571 (316Ti)**

Diameter / length [mm]:	82 / 300
Design temperature [°C]:	-196 ... 200
Design pressure [bar]:	-1 ... 16
Weight [g]:	450
Flange min.:	DN 100

Float UZVS/82/300													
Specific gravity of the liquid [kg/m³]	**300**	**400**	**500**	**600**	**700**	**800**	**900**	**1000**	**1100**	**1200**	**1300**	**1400**	**1500**
L-Mass [mm]	Immersion depth [%]												
400¹	-	-	-	65	55	50	45	40	35	35	30	30	30
500¹	-	-	-	65	55	50	45	40	35	35	30	30	30
600¹	-	-	-	65	55	50	45	40	40	35	35	30	30
700¹	-	-	-	65	60	50	45	40	40	35	35	30	30
800¹	-	-	-	70	60	55	45	45	40	35	35	30	30
900¹	-	-	-	70	60	55	50	45	40	35	35	35	30
1000¹	-	-	-	70	60	55	50	45	40	40	35	35	30
1100²	-	-	-	85	70	65	55	50	50	45	40	40	35
1200²	-	-	-	-	75	65	60	55	50	45	40	40	35
1300²	-	-	-	-	75	70	60	55	50	45	45	40	40
1400²	-	-	-	-	80	70	60	55	50	50	45	40	40
1500²	-	-	-	-	80	70	65	60	55	50	45	45	40
1600²	-	-	-	-	85	75	65	60	55	50	45	45	40
1700²	-	-	-	-	85	75	65	60	55	50	50	45	40
1800²	-	-	-	-	-	75	70	65	55	55	50	45	45
1900²	-	-	-	-	-	80	70	65	60	55	50	45	45
2000²	-	-	-	-	-	80	70	65	60	55	50	50	45

The top mounted level indicator-mini are based on a modular design and can be arranged individually.
Type key page 386 - 390

¹ = Guidance rod 10 x 0.5 mm / ² = Guidance rod 10 x 1.0 mm / ³ = Guidance rod 16 x 1.0 mm

Heinrich Kübler AG
Ruessenstrasse 4 | CH-6340 Baar | Phone +41 (0)41 766 62 62 | Fax +41 (0)41 766 62 63 | E-Mail info@kubler.ch | Internet www.kubler.ch

Cylindrical float **UZTIS/52/200** **Titanium**

Diameter / length [mm]:	52 / 200
Design temperature [°C]:	-30 ... 150
Design pressure [bar]:	-1 ... 16
Weight [g]:	109
Flange min.:	DN 50

Float UZTIS/52/200

Specific gravity of the liquid [kg/m³]	300	400	500	600	700	800	900	1000	1100	1200	1300	1400	1500
L-Mass [mm]	Immersion depth [%]												
400¹	-	-	-	-	75	65	60	55	50	45	45	40	40
500¹	-	-	-	-	80	70	65	60	55	50	45	40	40
600¹	-	-	-	-	85	75	65	60	55	50	50	45	40
700¹	-	-	-	-	-	80	70	65	60	55	50	45	45
800¹	-	-	-	-	-	80	75	65	60	55	50	50	45
900¹	-	-	-	-	-	85	75	70	65	60	55	50	50
1000¹	-	-	-	-	-	-	80	70	65	60	55	55	50
1100²	-	-	-	-	-	-	-	-	-	-	80	75	70
1200²	-	-	-	-	-	-	-	-	-	-	85	80	75
1300²	-	-	-	-	-	-	-	-	-	-	-	85	75
1400²	-	-	-	-	-	-	-	-	-	-	-	-	80
1500²	-	-	-	-	-	-	-	-	-	-	-	-	85

Cylindrical float **UZTIS/52/250** **Titanium**

Diameter / length [mm]:	52 / 250
Design temperature [°C]:	-30 ... 150
Design pressure [bar]:	-1 ... 16
Weight [g]:	138
Flange min.:	DN 50

Float UZVS/52/250

Specific gravity of the liquid [kg/m³]	300	400	500	600	700	800	900	1000	1100	1200	1300	1400	1500
L-Mass [mm]	Immersion depth [%]												
400¹	-	-	-	-	70	60	55	50	45	40	40	35	35
500¹	-	-	-	-	70	65	55	50	45	45	40	35	35
600¹	-	-	-	-	75	65	60	55	50	45	40	40	35
700¹	-	-	-	-	80	70	60	55	50	45	45	40	40
800¹	-	-	-	-	80	70	65	60	55	50	45	40	40
900¹	-	-	-	-	85	75	65	60	55	50	45	45	40
1000¹	-	-	-	-	-	75	70	65	55	55	50	45	45
1100²	-	-	-	-	-	-	-	85	80	70	65	60	60
1200²	-	-	-	-	-	-	-	-	80	75	70	65	60
1300²	-	-	-	-	-	-	-	-	-	80	75	70	65
1400²	-	-	-	-	-	-	-	-	-	85	75	70	65
1500²	-	-	-	-	-	-	-	-	-	-	80	75	70

The top mounted level indicator-mini are based on a modular design and can be arranged individually.
Type key page 386 - 390

¹ = Guidance rod 10 x 0.5 mm / ² = Guidance rod 10 x 1.0 mm / ³ = Guidance rod 16 x 1.0 mm

Cylindrical float **UZTIS/52/350** **Titanium**

Diameter / length [mm]:	52 / 350
Design temperature [°C]:	-30 ... 150
Design pressure [bar]:	-1 ... 16
Weight [g]:	193
Flange min.:	DN 50

Float UZTIS/52/350

Specific gravity of the liquid [kg/m³]	300	400	500	600	700	800	900	1000	1100	1200	1300	1400	1500
L-Mass [mm]	Immersion depth [%]												
400¹	-	-	-	65	55	50	45	40	35	35	30	30	30
500¹	-	-	-	70	60	50	45	40	40	35	35	30	30
600¹	-	-	-	70	60	55	50	45	40	35	35	30	30
700¹	-	-	-	75	65	55	50	45	40	40	35	35	30
800¹	-	-	-	75	65	60	50	45	45	40	35	35	30
900¹	-	-	-	80	70	60	55	50	45	40	40	35	35
1000¹	-	-	-	85	70	65	55	50	45	45	40	35	35
1100²	-	-	-	-	-	80	75	65	60	55	50	50	45
1200²	-	-	-	-	-	85	75	70	65	60	55	50	45
1300²	-	-	-	-	-	-	80	70	65	60	55	50	50
1400²	-	-	-	-	-	-	85	75	70	65	60	55	50
1500²	-	-	-	-	-	-	-	80	70	65	60	55	55
1600²	-	-	-	-	-	-	-	80	75	70	65	60	55
1700²	-	-	-	-	-	-	-	85	75	70	65	60	55
1800²	-	-	-	-	-	-	-	-	80	75	70	65	60
1900²	-	-	-	-	-	-	-	-	85	75	70	65	60
2000²	-	-	-	-	-	-	-	-	-	80	75	70	65

Cylindrical float **UZTIS/76/200** **Titanium**

Diameter / length [mm]:	76 / 200
Design temperature [°C]:	-30 ... 150
Design pressure [bar]:	-1 ... 1
Weight [g]:	148
Flange min.:	DN 80

Float UZTIS/76/200

Specific gravity of the liquid [kg/m³]	300	400	500	600	700	800	900	1000	1100	1200	1300	1400	1500
L-Mass [mm]	Immersion depth [%]												
400¹	-	-	-	50	45	40	35	35	30	30	25	25	25
500¹	-	-	-	55	50	40	40	35	35	30	30	25	25
600¹	-	-	-	55	50	45	40	35	35	30	30	30	25
700¹	-	-	-	60	50	45	40	40	35	35	30	30	25
800¹	-	-	-	60	55	50	45	40	35	35	30	30	30
900¹	-	-	-	65	55	50	45	40	35	35	35	30	30
1000¹	-	-	-	65	55	50	45	40	40	35	35	30	30
1100²	-	-	-	-	75	70	60	55	50	50	45	40	40
1200²	-	-	-	-	80	70	65	60	55	50	45	45	40
1300²	-	-	-	-	85	75	65	60	55	50	50	45	45
1400²	-	-	-	-	-	80	70	65	60	55	50	45	45
1500²	-	-	-	-	-	80	75	65	60	55	50	50	45
1600²	-	-	-	-	-	85	75	70	65	60	55	50	50
1700²	-	-	-	-	-	-	80	70	65	60	55	55	50
1800²	-	-	-	-	-	-	80	75	70	65	60	55	50
1900²	-	-	-	-	-	-	85	75	70	65	60	55	55
2000²	-	-	-	-	-	-	-	80	70	65	60	60	55

The top mounted level indicator-mini are based on a modular design and can be arranged individually.
Type key page 386 - 390

¹ = Guidance rod 11 x 0.5 mm / ² = Guidance rod 11 x 1.0 mm / ³ = Guidance rod 17 x 1.0 mm

Heinrich Kübler AG
Ruessenstrasse 4 | CH-6340 Baar | Phone +41 (0)41 766 62 62 | Fax +41 (0)41 766 62 63 | E-Mail info@kubler.ch | Internet www.kubler.ch

Cylindrical float **UZTIS/76/250** **Titanium**

Diameter / length [mm]:	76 / 250
Design temperature [°C]:	-30 ... 150
Design pressure [bar]:	-1 ... 1
Weight [g]:	186
Flange min.:	DN 80

Float UZTIS/76/250													
Specific gravity of the liquid [kg/m³]	**300**	**400**	**500**	**600**	**700**	**800**	**900**	**1000**	**1100**	**1200**	**1300**	**1400**	**1500**
L-Mass [mm]	Immersion depth [%]												
400¹	-	-	55	45	40	35	35	30	30	25	25	25	20
500¹	-	-	55	50	40	40	35	30	30	25	25	25	20
600¹	-	-	60	50	45	40	35	30	30	30	25	25	25
700¹	-	-	60	50	45	40	35	35	30	30	25	25	25
800¹	-	-	65	55	45	40	40	35	30	30	30	25	25
900¹	-	-	65	55	50	45	40	35	35	30	30	25	25
1000¹	-	-	70	55	50	45	40	35	35	30	30	25	25
1100²	-	-	-	75	65	60	50	45	45	40	35	35	35
1200²	-	-	-	80	70	60	55	50	45	40	40	35	35
1300²	-	-	-	80	70	65	55	50	45	45	40	40	35
1400²	-	-	-	85	75	65	60	55	50	45	40	40	35
1500²	-	-	-	-	75	70	60	55	50	45	45	40	40
1600²	-	-	-	-	80	70	65	55	55	50	45	40	40
1700²	-	-	-	-	85	75	65	60	55	50	45	45	40
1800²	-	-	-	-	85	75	70	60	55	50	50	45	45
1900²	-	-	-	-	-	80	70	65	60	55	50	45	45
2000²	-	-	-	-	-	80	70	65	60	55	50	50	45
2100³	-	-	-	-	-	-	-	-	-	80	75	70	65
2200³	-	-	-	-	-	-	-	-	-	85	80	75	70
2300³	-	-	-	-	-	-	-	-	-	-	85	75	70
2400³	-	-	-	-	-	-	-	-	-	-	85	75	75
2500³	-	-	-	-	-	-	-	-	-	-	85	80	75
2600³	-	-	-	-	-	-	-	-	-	-	-	80	75
2700³	-	-	-	-	-	-	-	-	-	-	-	85	80
2800³	-	-	-	-	-	-	-	-	-	-	-	-	80
2900³	-	-	-	-	-	-	-	-	-	-	-	-	85

The top mounted level indicator-mini are based on a modular design and can be arranged individually.
Type key page 386 - 390

¹ = Guidance rod 11 x 0.5 mm / ² = Guidance rod 11 x 1.0 mm / ³ = Guidance rod 17 x 1.0 mm

Heinrich Kübler AG
Ruessenstrasse 4 | CH-6340 Baar | Phone +41 (0)41 766 62 62 | Fax +41 (0)41 766 62 63 | E-Mail info@kubler.ch | Internet www.kubler.ch

Cylindrical float **UZTIS/76/300** **Titanium**

Diameter / length [mm]:	76 / 300
Design temperature [°C]:	-30 ... 150
Design pressure [bar]:	-1 ... 1
Weight [g]:	218
Flange min.:	DN 80

Float UZTIS/76/300													
Specific gravity of the liquid [kg/m³]	**300**	**400**	**500**	**600**	**700**	**800**	**900**	**1000**	**1100**	**1200**	**1300**	**1400**	**1500**
L-Mass [mm]	Immersion depth [%]												
400¹	-	60	50	40	35	35	30	25	25	25	20	20	20
500¹	-	65	50	45	40	35	30	30	25	25	20	20	20
600¹	-	65	55	45	40	35	30	30	25	25	25	20	20
700¹	-	70	55	45	40	35	30	30	25	25	25	20	20
800¹	-	70	55	50	40	35	35	30	30	25	25	25	20
900¹	-	70	60	50	45	40	35	30	30	25	25	25	20
1000¹	-	75	60	50	45	40	35	30	30	30	25	25	25
1100²	-	-	80	65	55	50	45	40	40	35	30	30	30
1200²	-	-	80	70	60	50	45	45	40	35	35	30	30
1300²	-	-	85	70	60	55	50	45	40	40	35	35	30
1400²	-	-	-	75	65	55	50	45	40	40	35	35	30
1500²	-	-	-	75	65	60	50	50	45	40	40	35	35
1600²	-	-	-	80	70	60	55	50	45	40	40	35	35
1700²	-	-	-	80	70	65	55	50	45	45	40	40	35
1800²	-	-	-	85	75	65	60	55	50	45	40	40	35
1900²	-	-	-	-	75	65	60	55	50	45	45	40	40
2000²	-	-	-	-	80	70	60	55	50	50	45	40	40
2100³	-	-	-	-	-	-	-	80	75	70	65	60	55
2200³	-	-	-	-	-	-	-	85	75	70	65	60	55
2300³	-	-	-	-	-	-	-	-	80	75	70	65	60
2400³	-	-	-	-	-	-	-	-	80	75	70	65	60
2500³	-	-	-	-	-	-	-	-	85	80	70	65	65
2600³	-	-	-	-	-	-	-	-	-	80	75	70	65
2700³	-	-	-	-	-	-	-	-	-	80	75	70	65
2800³	-	-	-	-	-	-	-	-	-	85	80	75	70
2900³	-	-	-	-	-	-	-	-	-	-	80	75	70
3000³	-	-	-	-	-	-	-	-	-	-	85	75	70
3100³	-	-	-	-	-	-	-	-	-	-	85	80	75
3200³	-	-	-	-	-	-	-	-	-	-	-	80	75
3300³	-	-	-	-	-	-	-	-	-	-	-	85	80

The top mounted level indicator-mini are based on a modular design and can be arranged individually.
Type key page 386 - 390

¹ = Guidance rod 11 x 0.5 mm / ² = Guidance rod 11 x 1.0 mm / ³ = Guidance rod 17 x 1.0 mm

Heinrich Kübler AG
Ruessenstrasse 4 | CH-6340 Baar | Phone +41 (0)41 766 62 62 | Fax +41 (0)41 766 62 63 | E-Mail info@kubler.ch | Internet www.kubler.ch

Cylindrical float **UZTIS/76/350** **Titanium**

Diameter / length [mm]:	76 / 350
Design temperature [°C]:	-30 ... 150
Design pressure [bar]:	-1 ... 1
Weight [g]:	258
Flange min.:	DN 80

Float UZTIS/76/350

Specific gravity of the liquid [kg/m³]	**300**	**400**	**500**	**600**	**700**	**800**	**900**	**1000**	**1100**	**1200**	**1300**	**1400**	**1500**
L-Mass [mm]	Immersion depth [%]												
400¹	-	60	45	40	35	30	30	25	25	20	20	20	20
500¹	-	60	50	40	35	30	30	25	25	20	20	20	20
600¹	-	60	50	40	35	35	30	25	25	25	20	20	20
700¹	-	65	50	45	40	35	30	30	25	25	20	20	20
800¹	-	65	55	45	40	35	30	30	25	25	25	20	20
900¹	-	70	55	45	40	35	30	30	25	25	25	20	20
1000¹	-	70	55	50	40	35	35	30	30	25	25	20	20
1100²	-	-	70	60	50	45	40	35	35	30	30	25	25
1200²	-	-	75	60	55	45	40	40	40	35	30	30	25
1300²	-	-	75	65	55	50	45	40	35	35	30	30	30
1400²	-	-	80	65	55	50	45	40	40	35	35	30	30
1500²	-	-	80	70	60	50	45	45	40	35	35	30	30
1600²	-	-	85	70	60	55	50	45	40	35	35	35	30
1700²	-	-	-	75	65	55	50	45	40	40	35	35	30
1800²	-	-	-	75	65	60	50	45	45	40	35	35	35
1900²	-	-	-	80	70	60	55	50	45	40	40	35	35
2000²	-	-	-	80	70	60	55	50	45	40	40	35	35
2100³	-	-	-	-	-	-	80	70	65	60	55	50	50
2200³	-	-	-	-	-	-	80	75	65	60	55	55	50
2300³	-	-	-	-	-	-	85	75	70	65	60	55	50
2400³	-	-	-	-	-	-	-	80	70	65	60	55	55
2500³	-	-	-	-	-	-	-	80	75	70	65	60	55
2600³	-	-	-	-	-	-	-	85	75	70	65	60	55
2700³	-	-	-	-	-	-	-	85	80	70	65	60	60
2800³	-	-	-	-	-	-	-	-	80	75	70	65	60
2900³	-	-	-	-	-	-	-	-	80	75	70	65	60
3000³	-	-	-	-	-	-	-	-	85	80	70	65	65
3100³	-	-	-	-	-	-	-	-	-	80	75	70	65
3200³	-	-	-	-	-	-	-	-	-	80	75	70	65
3300³	-	-	-	-	-	-	-	-	-	85	80	70	70
3400³	-	-	-	-	-	-	-	-	-	-	80	75	70
3500³	-	-	-	-	-	-	-	-	-	-	80	75	70
3600³	-	-	-	-	-	-	-	-	-	-	85	80	75
3700³	-	-	-	-	-	-	-	-	-	-	85	80	75
3800³	-	-	-	-	-	-	-	-	-	-	-	80	75
3900³	-	-	-	-	-	-	-	-	-	-	-	85	80
4000³	-	-	-	-	-	-	-	-	-	-	-	85	80
4100³	-	-	-	-	-	-	-	-	-	-	-	-	80
4200³	-	-	-	-	-	-	-	-	-	-	-	-	80
4300³	-	-	-	-	-	-	-	-	-	-	-	-	85
4400³	-	-	-	-	-	-	-	-	-	-	-	-	85
4500³	-	-	-	-	-	-	-	-	-	-	-	-	-

The top mounted level indicator-mini are based on a modular design and can be arranged individually.
Type key page 386 - 390

¹ = Guidance rod 11 x 0.5 mm / ² = Guidance rod 11 x 1.0 mm / ³ = Guidance rod 17 x 1.0 mm

Type	**MNA / MNB** **MNAN / MNBN**
Electrical connection:	Aluminium anodized
Ingress protection class:	IP67

MNA / MNB / MNAN / MNBN

Indication

- Material quality / Diameter:	Pocan / Ø 10 mm
- Colour:	White / Red
End part:	Ryton, black
Sight cover - MNA / MNAN:	Macrolon
- MNB / MNBN:	Glass
Ambient temperature:	-40°C ... 200°C
MNAN / MNBN (over-roll-protected):	Roller rotation max. 180°

Approvals / Certificates

ABS / ATEX / BV / EAC / GL / LR

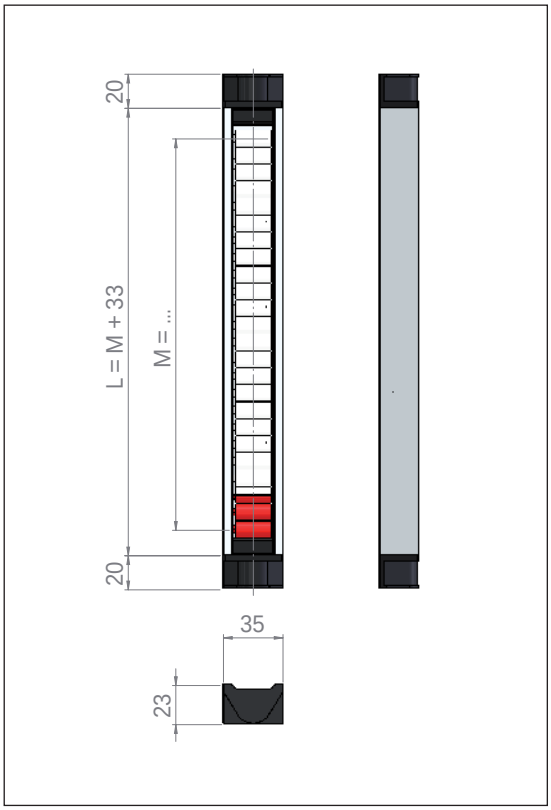

Type	**MNAV / MNBV** **MNAVN / MNBVN**
Electrical connection:	Aluminium with Stainless steel covered
Ingress protection class:	IP67

MNAV / MNBV / MNAVN / MNBVN

Indication

- Material quality / Diameter:	Pocan / Ø 10 mm
- Colour:	White / Red
End part:	Ryton, black
Sight cover - MNAV / MNAVN:	Macrolon
- MNBV / MNBVN:	Glass
Ambient temperature:	-40°C ... 200°C
MNAVN / MNBVN (over-roll-protected):	Roller rotation max. 180°

Approvals / Certificates

ABS / ATEX / BV / EAC / GL / LR

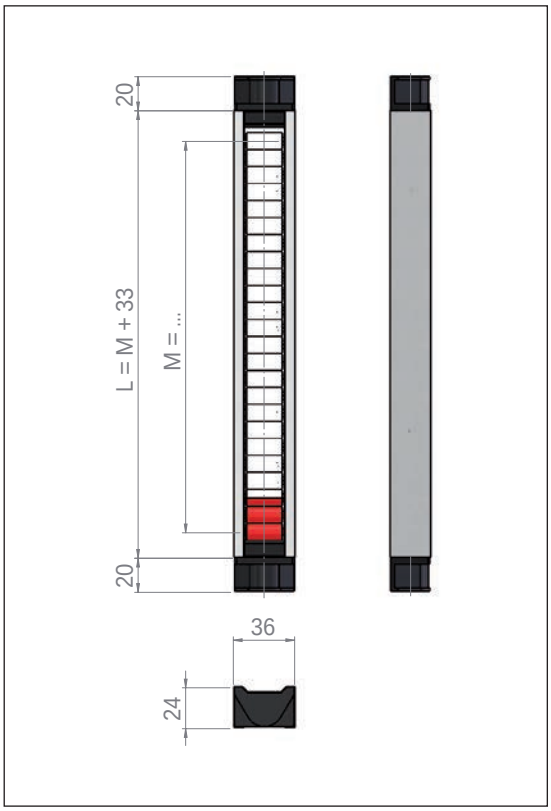

The top mounted level indicator-mini are based on a modular design and can be arranged individually.
Type key page 386 - 390

Heinrich Kübler AG
Ruessenstrasse 4 | CH-6340 Baar | Phone +41 (0)41 766 62 62 | Fax +41 (0)41 766 62 63 | E-Mail info@kubler.ch | Internet www.kubler.ch

Type	SAK / SA.. / SV..

SAK

Scale:	Adhesive foil (black)
Angle profile:	Aluminium
Scaling:	in cm (0 cm .. 10 cm .. 20 cm .. 30 cm ..)
Width:	40 mm
Ambient temperature:	-40°C ... 200°C

SA0 / SA1 / SA2 / SA3 / SA4

Scale:	Engraved
Angle profile:	Aluminium
Scaling:	Blank / % / cm / inch. / ..
Width:	40 mm
Ambient temperature:	-40°C ... 200°C

SV0 / SV1 / SV2 / SV3 / SV4

Scale:	Engraved
Angle profile:	Stainless steel
Scaling:	Blank / % / cm / inch. / ..
Width:	40 mm
Ambient temperature:	-40°C ... 400°C

Approvals / Certificates

ABS / ATEX / BV / EAC / GL / LR

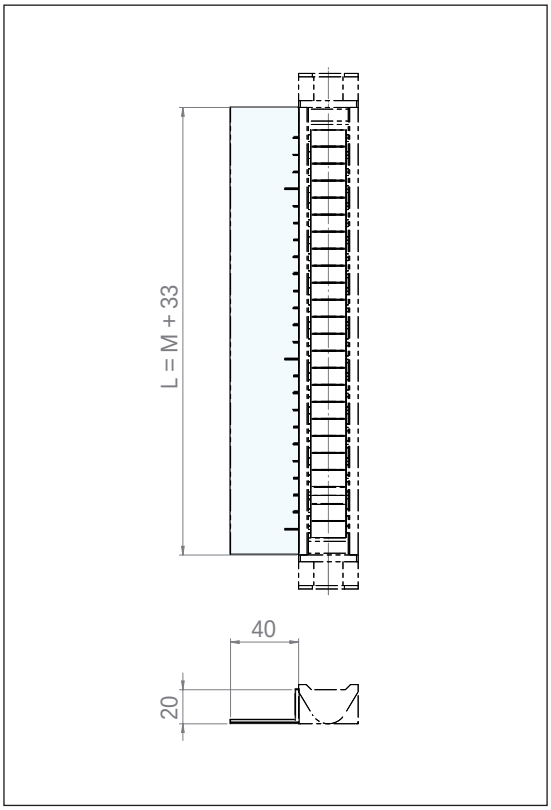

Type	Magnetic roller indicator sight extension PV
Material quality:	Acryl glass
Width:	35 mm
Depth:	67 mm
Ambient temperature:	-40°C ... 100°C
Mounting:	on magnetic roller indicator

Approvals / Certificates

ABS / ATEX / BV / EAC / GL / LR

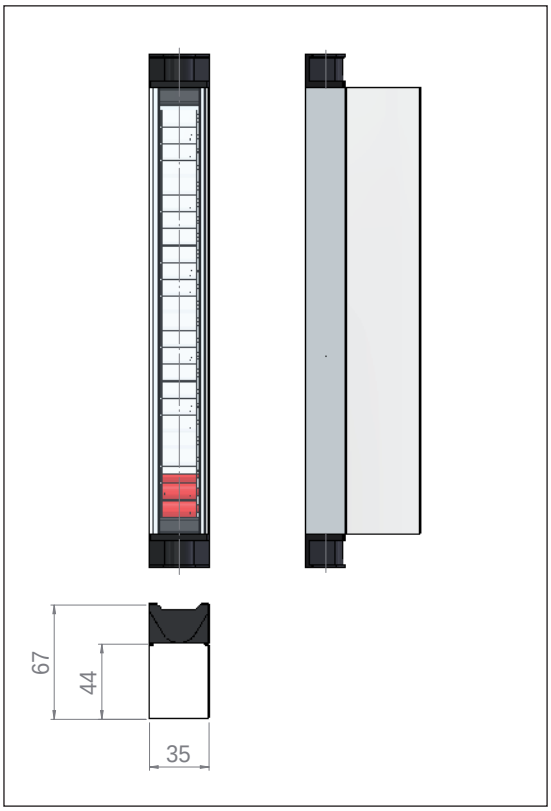

The top mounted level indicator-mini are based on a modular design and can be arranged individually.
Type key page 386 - 390

Connection diagram

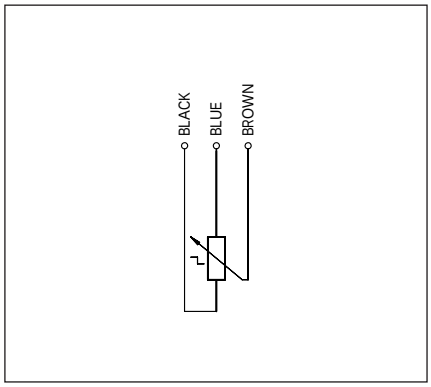

without Control unit

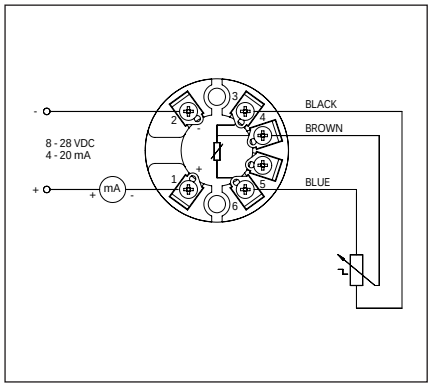

Control unit TP5343..

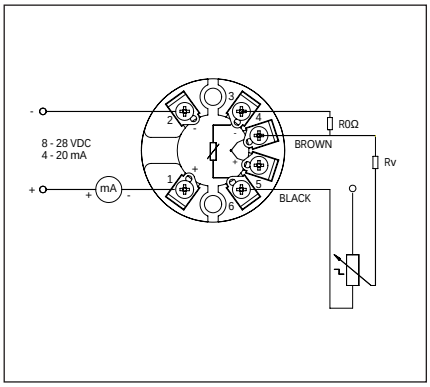

Control unit TD5335..

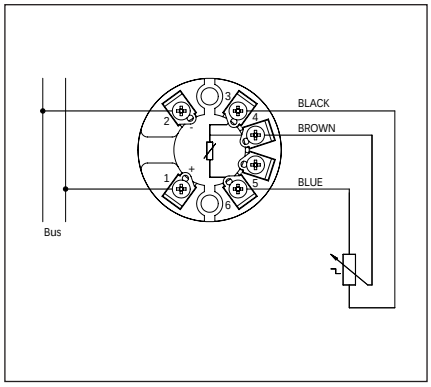

Control unit TP5350..

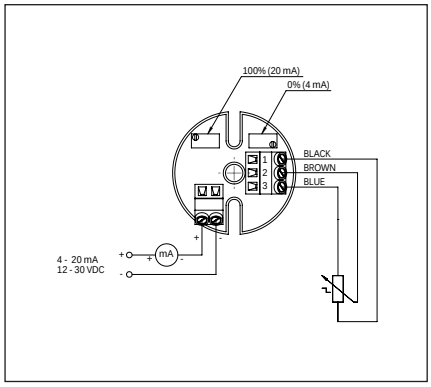

Control unit XT42SI Ex

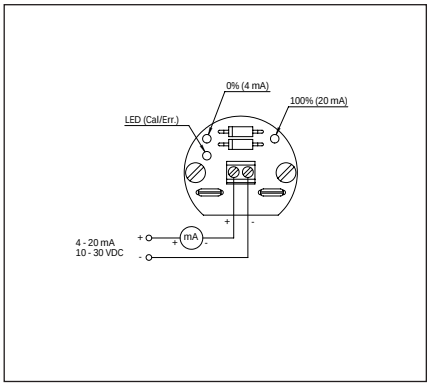

Control unit Magnetostriktiv

Some further data according to chapter Control Units 1011

Approvals / Certificates

ATEX-Approval for accuracy K5.. / K10.. / K15..*

II 1/2G Ex c ia IIC T6 - T3 Ga/Gb	II 2G Ex c d IIC T6 - T4 Gb	II 2G Ex c d IIC T6 - T4 Gb
II 1/2G Ex c d ia IIC T6 - T4 Ga/Gb	II 2D Ex c tb IIIC T80°C - T190°C bzw. T125°C Db IP6X	II 2D Ex c tb IIIC T80°C - T95°C bzw. T125°C Db IP6X

Type of protection intrinsic safety Ex ia IIC passive multi-pole device	U_i ≤ 30 V	I_i ≤ 150 mA		
Type of protection intrinsic safety Ex ia IIC with built-in separately certified measuring transducer		see appropriate special certificate		
Type of protection intrinsic safety Ex ia IIC switch or temperature switch	I_i ≤ 100 mA			
Type of protection intrinsic safety Ex ia IIC temperature sensor	U_N ≤ 28 V	I_i ≤ 100 mA	P_i ≤ 700 mW	
Type of protection “flameproof enclosure” passive multi-pole device	U_N ≤ 30 VDC/AC	I_N ≤ 150 mA		
Type of protection “flameproof enclosure” temperature switch / sensor	U_N ≤ 100 VDC/AC	I_N ≤ 300 mA	P_{SN} ≤ 1 W	P_{FN} ≤ 700 mW

ATEX-Approval for accuracy K1..*

II 2G Ex ia IIB/IIC T6 - T1 Gb	II 2G Ex d IIC T4	

Type of protection intrinsic safety Ex ia IIC	U_i ≤ 30 V	I_i ≤ 200 mA	P_i ≤ 1000 mW
Temperature class	T6	T5	T4 - T2
Ambient temperature(T_a)	-40°C ... 40°C	-40°C ... 55°C	-40°C ... 85°C

The top mounted level indicator-mini are based on a modular design and can be arranged individually.
Type key page 386 - 390

* = The approval is dependent on the equipment combination

Heinrich Kübler AG
Ruessenstrasse 4 | CH-6340 Baar | Phone +41 (0)41 766 62 62 | Fax +41 (0)41 766 62 63 | E-Mail info@kubler.ch | Internet www.kubler.ch

Type **ALF/../V/../..-M..**

Electrical connection:	Aluminium anodized
Cable entry:	M20 x 1.5
Ingress protection class:	IP 65
Ambient temperature:	-40°C ... 100°C
Level transmitter tube material quality:	Stainless steel
Mounting:	Tension strap
Minimum measures:	T: 27 mm / L1: 40 mm / Ub: 50 mm

Accuracy

Accuracy:	5 / 10 / 15 mm
Ambient temperature / ATEX Exia:	
- K5 / K10 / K15:	-30°C ... 130°C
- K5HTF / K10HTF / K15HTF:	-30°C ... 200°C / -30°C ... 180°C
- K5HT / K10HT / K15HT:	-40°C ... 250°C / -40°C ... 180°C

Option control unit / Page 410

Control unit:	- Programmable - Hart-programmable / SIL2 - Profibus PA - Foundation Fieldbus

Approvals / Certificates

ABS / ATEX / BV / EAC / GL / LR

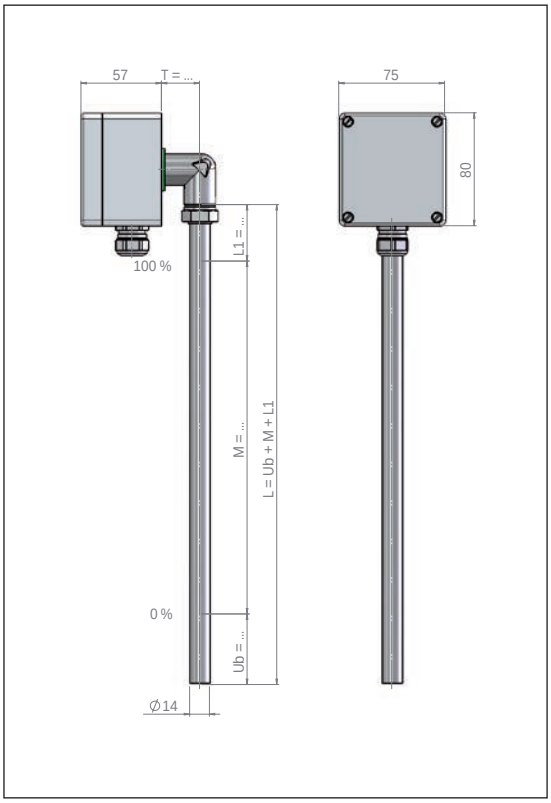

Type **ALDA/../V/../EXDG-M..**

Electrical connection:	Aluminium coated RAL 9006
Cable entry:	M20 x 1.5
Ingress protection class:	IP 68
Ambient temperature:	-40°C ... 100°C
Level transmitter tube material quality:	Stainless steel
Mounting:	Tension strap
Minimum measures:	T: 50 mm / L1: 40 mm / Ub: 50 mm

Accuracy

Accuracy:	5 / 10 / 15 mm
Ambient temperature	
- K5 / K10 / K15:	-30°C ... 130°C
- K5HTF / K10HTF / K15HTF:	-30°C ... 200°C
- K5HT / K10HT / K15HT:	-40°C ... 250°C

Option control unit / Page 410

Control unit:	- Programmable - Hart-programmable / SIL2 - Profibus PA - Foundation Fieldbus

Approvals / Certificates

ABS / ATEX / BV / EAC / GL / LR

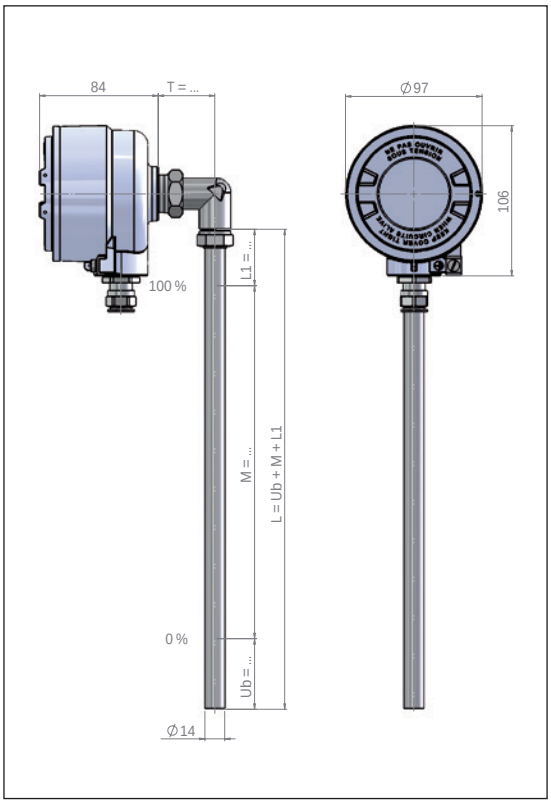

The top mounted level indicator-mini are based on a modular design and can be arranged individually.
Type key page 386 - 390

Type **DAALA/../V/..-M..**

Electrical connection:	Aluminium anodized
Cable entry:	M20 x 1.5
Ingress protection class:	IP 65
Ambient temperature:	-40°C ... 60°C
Display:	4-digit LED display in red / Free scaling
Current input:	4 ... 20 mA
Level transmitter tube material quality:	Stainless steel
Mounting:	Tension strap
Minimum measures:	T: 50 mm / L1: 40 mm / Ub: 50 mm

Accuracy:	5 / 10 / 15 mm
Ambient temperature	
- K5 / K10 / K15:	-30°C ... 130°C
- K5HTF / K10HTF / K15HTF:	-30°C ... 200°C
- K5HT / K10HT / K15HT:	-40°C ... 250°C

Option control unit / Page 410

Control unit:	- Programmable - Hart-programmable / SIL2 - Profibus PA - Foundation Fieldbus

Approvals / Certificates

EAC

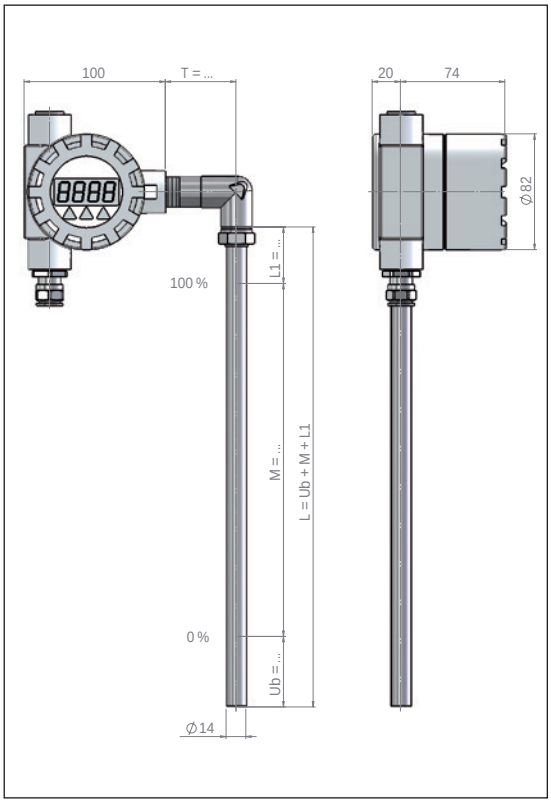

Type **DAAVDA/../V/../EXDG-M..**

Electrical connection:	Stainless steel electropolished
Cable entry:	M20 x 1.5
Ingress protection class:	IP 68
Ambient temperature:	-40°C ... 60°C
Display:	4-digit LED display in red / Free scaling
Current input:	4 ... 20 mA
Level transmitter tube material quality:	Stainless steel
Mounting:	Tension strap
Minimum measures:	T: 50 mm / L1: 40 mm / Ub: 50 mm

Accuracy:	5 / 10 / 15 mm
Ambient temperature	
- K5 / K10 / K15:	-30°C ... 130°C (Exd 120°C)
- K5HTF / K10HTF / K15HTF:	-30°C ... 180°C (Exd 120°C)
- K5HT / K10HT / K15HT:	-40°C ... 180°C (Exd 120°C)

Option control unit / Page 410

Control unit:	- Programmable - Hart-programmable / SIL2 - Profibus PA - Foundation Fieldbus

Approvals / Certificates

ATEX / EAC

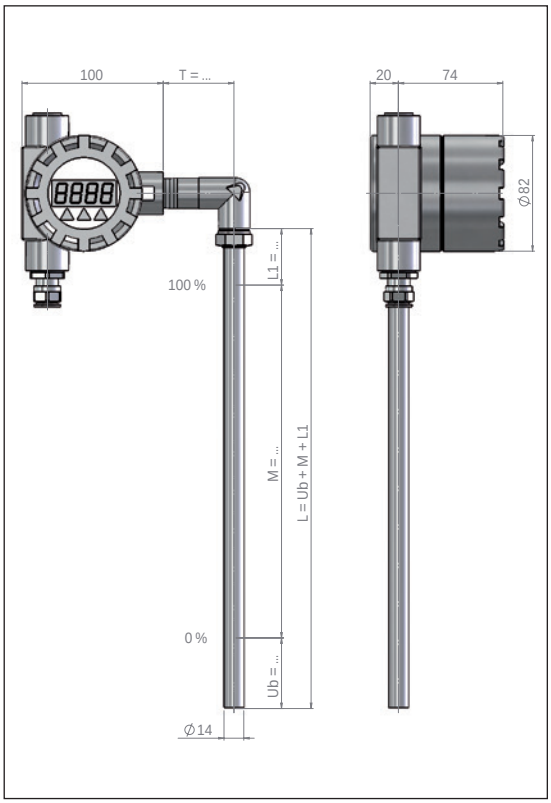

The top mounted level indicator-mini are based on a modular design and can be arranged individually.
Type key page 386 - 390

Heinrich Kübler AG
Ruessenstrasse 4 | CH-6340 Baar | Phone +41 (0)41 766 62 62 | Fax +41 (0)41 766 62 63 | E-Mail info@kubler.ch | Internet www.kubler.ch

Type **AVA/../V/..-M..**

Electrical connection:	Stainless steel A4 (SS316)
Cable entry:	M20 x 1.5
Ingress protection class:	IP 67
Ambient temperature:	-40°C ... 85°C
Level transmitter tube material quality:	Stainless steel
Mounting:	Tension strap
Minimum measures:	T: 50 mm / L1: 40 mm / Ub: 50 mm

Accuracy

Accuracy:	5 / 10 / 15 mm
Ambient temperature / ATEX Exia:	
- K5 / K10 / K15:	-30°C ... 130°C
- K5HTF / K10HTF / K15HTF:	-30°C ... 200°C / -30°C ... 180°C
- K5HT / K10HT / K15HT:	-40°C ... 250°C / -40°C ... 180°C

Option control unit / Page 410

Control unit:	- Programmable - Hart-programmable / SIL2 - Profibus PA - Foundation Fieldbus

Approvals / Certificates

ABS / ATEX / BV / EAC / GL / LR

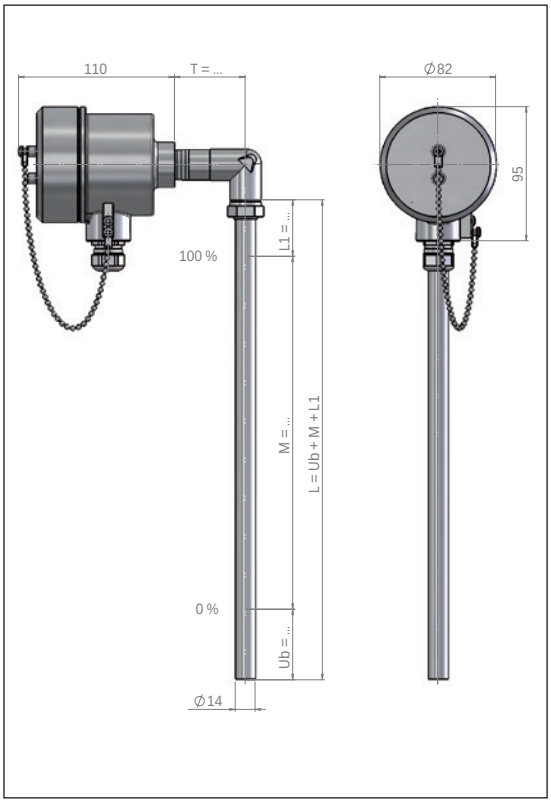

Type **AVM/../V/../..-M..**

Electrical connection:	Stainless steel A4 (SS316)
Cable entry:	M16 x 1.5
Ingress protection class:	IP 68
Ambient temperature:	-40°C ... 85°C / ATEX temperature p. 410
Level transmitter tube material quality:	Stainless steel
Mounting:	Tension strap
Minimum measures:	L1: 40 mm / Ub: 50 mm

Accuracy

Accuracy:	0.2 mm
Ambient temperature / ATEX Exia:	
- K1:	-40 ... 125°C / ATEX temperature p. 410
- K1HT:	-40 ... 250°C / ATEX temperature p. 410

Control unit

- MST / MSTB:	- Programmable 4 ... 20 mA, 10 ... 30 VDC
- MSTH / MSTHB:	- Hart-programmable 4 ... 20 mA, 10 ... 30 VDC

Approvals / Certificates

ATEX / EAC / IECEX / SIL2

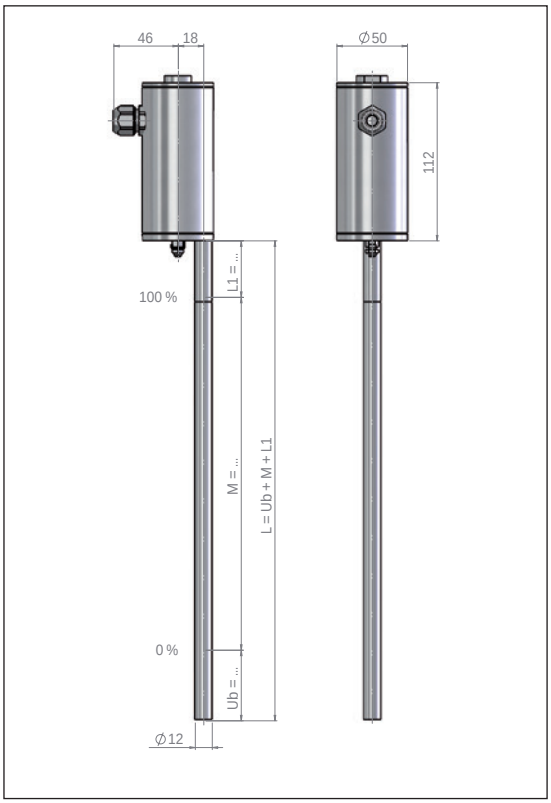

The top mounted level indicator-mini are based on a modular design and can be arranged individually.
Type key page 386 - 390

Type **AVDM/../V/../EXDG-M..**

Electrical connection:	Stainless steel A4 (SS316)
Cable entry:	M20 x 1.5
Ingress protection class:	IP 68
Ambient temperature:	ATEX temperature page 410
Level transmitter tube material quality:	Stainless steel
Mounting:	Tension strap
Minimum measures:	L1: 40 mm / Ub: 50 mm

Accuracy

Accuracy:	0.2 mm
Ambient temperature - K1:	ATEX temperature page 410

Control unit

- MSTB:	- Programmable 4 ... 20 mA, 10 ... 30 VDC
- MSTHB:	- Hart-programmable 4 ... 20 mA, 10 ... 30 VDC

Approvals / Certificates

ATEX / EAC / IECEX / SIL2

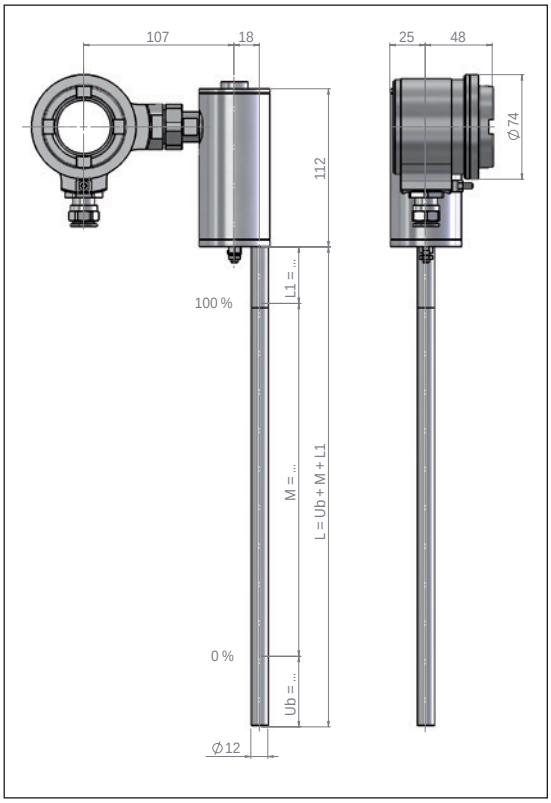

Type **DAAVDM/../V/../EXDG-M..**

Electrical connection:	Stainless steel A4 (SS316)
Cable entry:	M20 x 1.5
Ingress protection class:	IP 68
Ambient temperature:	ATEX temperature page 410
Level transmitter tube material quality:	Stainless steel
Mounting:	Tension strap
Minimum measures:	L1: 40 mm / Ub: 50 mm

Accuracy

Accuracy:	0.2 mm
Ambient temperature - K1:	ATEX temperature page 410

Control unit

- MSTB:	- Programmable 4 ... 20 mA, 10 ... 30 VDC
- MSTHB:	- Hart-programmable 4 ... 20 mA, 10 ... 30 VDC

Approvals / Certificates

ATEX / EAC / IECEX / SIL2

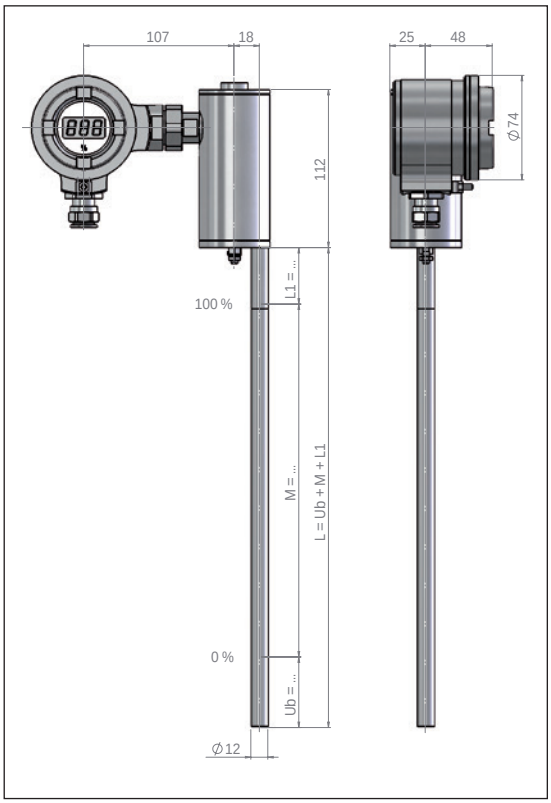

The top mounted level indicator-mini are based on a modular design and can be arranged individually.
Type key page 386 - 390

Heinrich Kübler AG
Ruessenstrasse 4 | CH-6340 Baar | Phone +41 (0)41 766 62 62 | Fax +41 (0)41 766 62 63 | E-Mail info@kubler.ch | Internet www.kubler.ch

Notes

The top mounted level indicator-mini are based on a modular design and can be arranged individually.
Type key page 386 - 390

Connection diagram

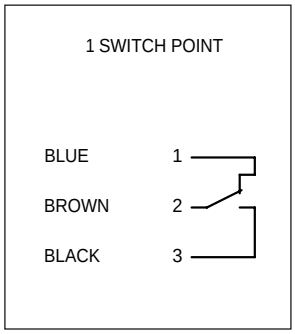

Change over (SPDT)

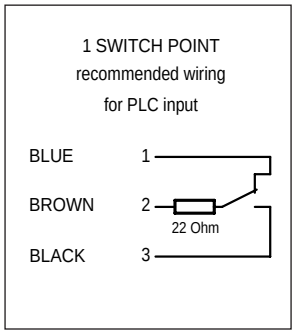

Change over (SPDT)
with resistor

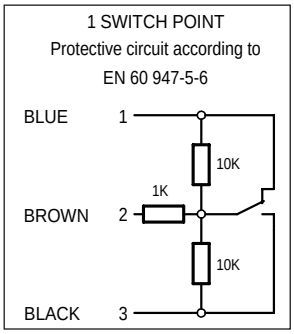

Change over (SPDT)
with NAMUR EN 60947

Approvals / Certificates

ATEX*

II 2G Ex ia IIC T6 - T1 Gb	II 2G Ex d IIC T6 - T4 Gb
II 2D Ex tb IIIC T80°C - T300°C Db IP6X	II 2D Ex tb IIIC T80°C - T120°C Db IP6X

Type of protection intrinsic safety Ex ia IIC	I_i ≤ 100 mA		
Type of protection intrinsic safety Ex ia IIC with option /R22 (resistor)	I_i ≤ 100 mA		
Type of protection intrinsic safety Ex ia IIC with option /N (NAMUR EN 60947)	U_i ≤ 15 VDC	I_i ≤ 60 mA	
Type of protection „flameproof enclosure“	U_N ≤ 250 VDC/AC	I_N ≤ 100 mA	
Type of protection „flameproof enclosure“ with option /R22 (resistor)	U_N ≤ 250 VDC/AC	I_N ≤ 100 mA	P_V ≤ 0.21 W
Type of protection „flameproof enclosure“ with option /N (NAMUR EN 60947)	U_N ≤ 15 VDC	I_N ≤ 60 mA	

The top mounted level indicator-mini are based on a modular design and can be arranged individually.
Type key page 386 - 390

* = The approval is dependent on the equipment combination

Heinrich Kübler AG
Ruessenstrasse 4 | CH-6340 Baar | Phone +41 (0)41 766 62 62 | Fax +41 (0)41 766 62 63 | E-Mail info@kubler.ch | Internet www.kubler.ch

Type	**RU40/../../../..** **RU40/../../../../EXIAG**
Housing:	Aluminium anodized
Ingress protection class:	IP 68
Mounting:	Free positionable on the chamber
Ambient temperature	
- with PVC connection cable:	-20°C ... 80°C
- with Silikon connection cable:	-40°C ... 150°C
- with PUR connection cable:	-40°C ... 80°C
- with Radox connection cable:	-35°C ... 120°C

Switch function	
Function:	Change over (SPDT)
Switch behaviour:	Bistable
Switching capacity:	230 V / 0.5 A / 30 VA
Switching capacity / ATEX Exia:	Exia 100 mA / Exia NAMUR 60 mA
Switching hysteresis:	5 mm ... 7 mm

Options	
- Switch option .. /R22:	22 Ohm Resistor
- Switch option .. /N:	NAMUR EN 60947

Approvals / Certificates

AABS / ATEX / BV / EAC / GL / LR / SIL1

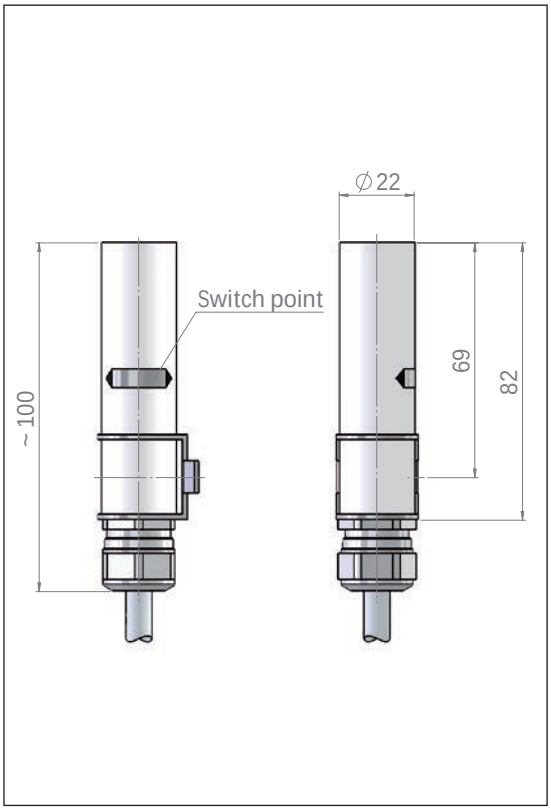

Type	**RUD40/../../../../EXDG**
Housing:	Aluminium anodized
Ingress protection class:	IP 68
Mounting:	Free positionable on the chamber
Ambient temperature:	
- with PVC connection cable:	-20°C ... 80°C
- with Silikon connection cable:	-40°C ... 120°C
- with PUR connection cable:	-40°C ... 80°C
- with Radox connection cable:	-35°C ... 120°C

Switch function	
Function:	Change over (SPDT)
Switch behaviour:	Bistable
Switching capacity:	U_N 250 V / P_{SN} 50 W/VA / P_{FN} 700 mW
- NAMUR EN 60947:	U_N 15 VDC / I_N 60 mA
- with resistor:	U_N 250 V / I_N 100 mA
Switching hysteresis:	5 mm ... 7 mm

Options	
- Switch option .. /R22:	22 Ohm Resistor
- Switch option .. /N:	NAMUR EN 60947

Approvals / Certificates

AABS / ATEX / BV / EAC / GL / LR / SIL1

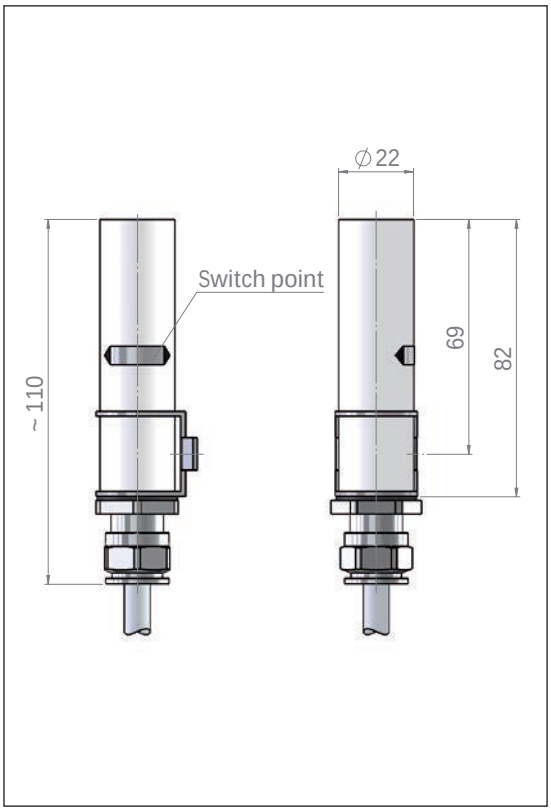

The top mounted level indicator-mini are based on a modular design and can be arranged individually.
Type key page 386 - 390

Type	**RUV40/../../../..** **RUV40/../../../../EXIAG**

Housing:	Stainless steel
Ingress protection class:	IP 68
Mounting:	Free positionable on the chamber
Ambient temperature	
- with PVC connection cable:	-20°C ... 80°C
- with Silikon connection cable:	-40°C ... 150°C
- with PUR connection cable:	-40°C ... 80°C
- with Radox connection cable:	-35°C ... 120°C

Switch function	
Function:	Change over (SPDT)
Switch behaviour:	Bistable
Switching capacity:	230 V / 0.5 A / 30 VA
Switching capacity / ATEX Exia:	Exia 100 mA / Exia NAMUR 60 mA
Switching hysteresis:	5 mm ... 7 mm

Options	
- Switch option .. /R22:	22 Ohm Resistor
- Switch option .. /N:	NAMUR EN 60947

Approvals / Certificates

AABS / ATEX / BV / EAC / GL / LR / SIL1

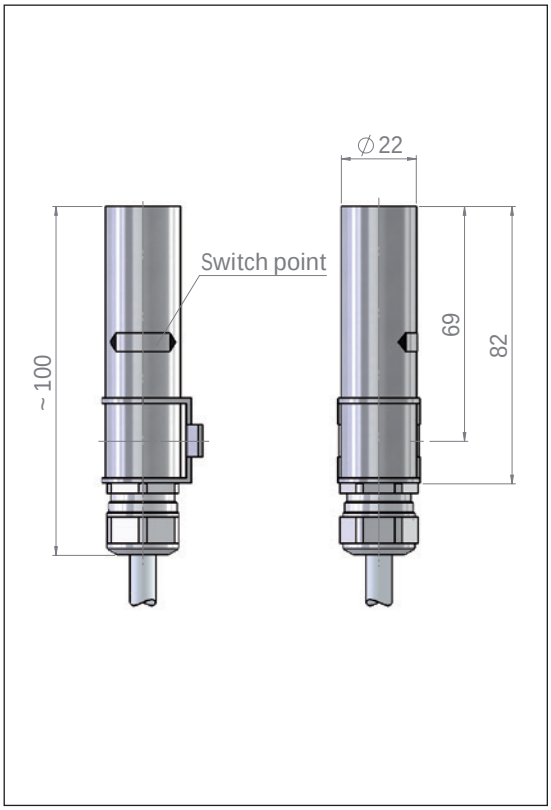

Type	**RUVD40/../../../../EXDG**

Housing:	Stainless steel
Ingress protection class:	IP 68
Mounting:	Free positionable on the chamber
Ambient temperature	
- with PVC connection cable:	-20°C ... 80°C
- with Silikon connection cable:	-40°C ... 120°C
- with PUR connection cable:	-40°C ... 80°C
- with Radox connection cable:	-35°C ... 120°C

Switch function	
Function:	Change over (SPDT)
Switch behaviour:	Bistable
Switching capacity:	U_N 250 V / P_{SN} 50 W/VA / P_{FN} 700 mW
- NAMUR EN 60947:	U_N 15 VDC / I_N 60 mA
- with resistor:	U_N 250 V / I_N 100 mA
Switching hysteresis:	5 mm ... 7 mm

Options	
- Switch option .. /R22:	22 Ohm Resistor
- Switch option .. /N:	NAMUR EN 60947

Approvals / Certificates

AABS / ATEX / BV / EAC / GL / LR / SIL1

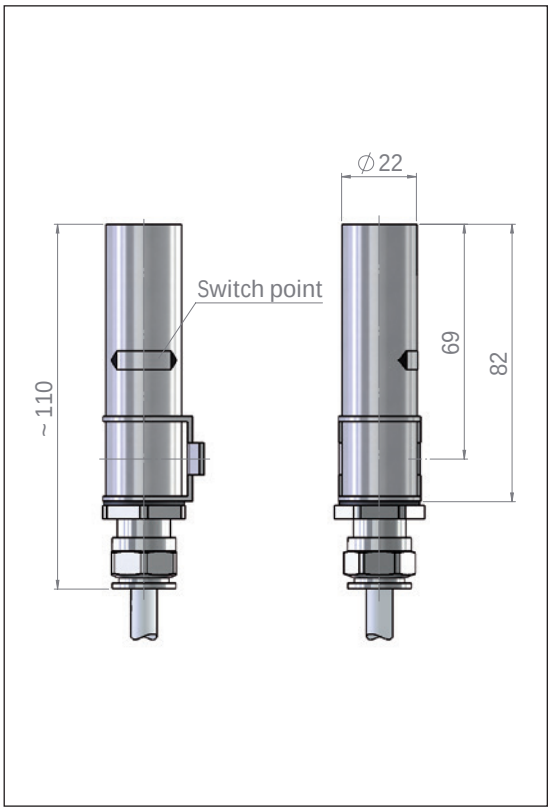

The top mounted level indicator-mini are based on a modular design and can be arranged individually.
Type key page 386 - 390

Heinrich Kübler AG
Ruessenstrasse 4 | CH-6340 Baar | Phone +41 (0)41 766 62 62 | Fax +41 (0)41 766 62 63 | E-Mail info@kubler.ch | Internet www.kubler.ch

Type	**ALERU40/..** **ALERU40/../EXIAG**
Housing:	Aluminium anodized
Cable entry:	M20 x 1.5
Ingress protection class:	IP 65 (optional IP 66)
Mounting:	Free positionable on the chamber
Ambient temperature:	-40°C ... 130°C

Switch function

Function:	Change over (SPDT)
Switch behaviour:	Bistable
Switching capacity:	230 V / 0.5 A / 30 VA
Switching capacity / ATEX Exia:	Exia 100 mA / Exia NAMUR 60 mA
Switching hysteresis:	5 mm ... 7 mm

Options

- Switch option .. /R22:	22 Ohm Resistor
- Switch option .. /N:	NAMUR EN 60947

Approvals / Certificates

AABS / ATEX / BV / EAC / GL / LR / SIL1

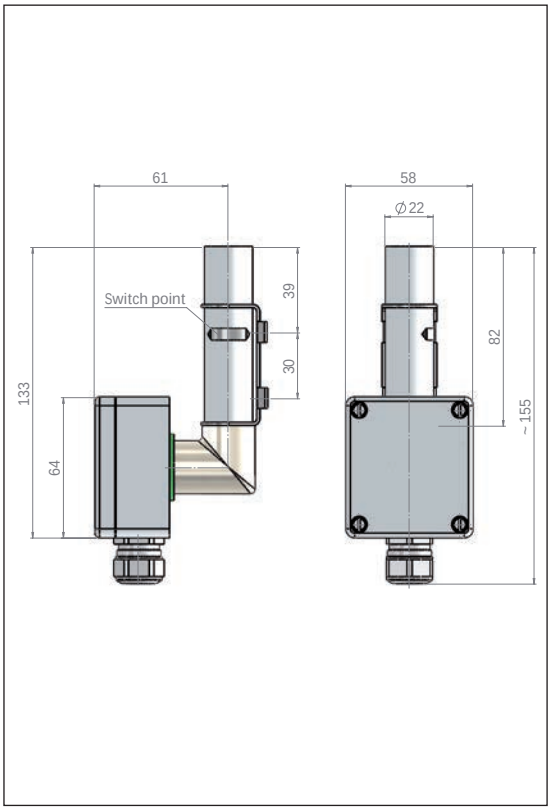

Type	**ALFRU40/..** **ALFRU40/../EXIAG**
Housing:	Aluminium anodized
Cable entry:	M20 x 1.5
Ingress protection class:	IP 65 (optional IP 66)
Mounting:	Free positionable on the chamber
Ambient temperature:	-40°C ... 130°C

Switch function

Function:	Change over (SPDT)
Switch behaviour:	Bistable
Switching capacity:	230 V / 0.5 A / 30 VA
Switching capacity / ATEX Exia:	Exia 100 mA / Exia NAMUR 60 mA
Switching hysteresis:	5 mm ... 7 mm

Options

- Switch option .. /R22:	22 Ohm Resistor
- Switch option .. /N:	NAMUR EN 60947

Approvals / Certificates

AABS / ATEX / BV / EAC / GL / LR / SIL1

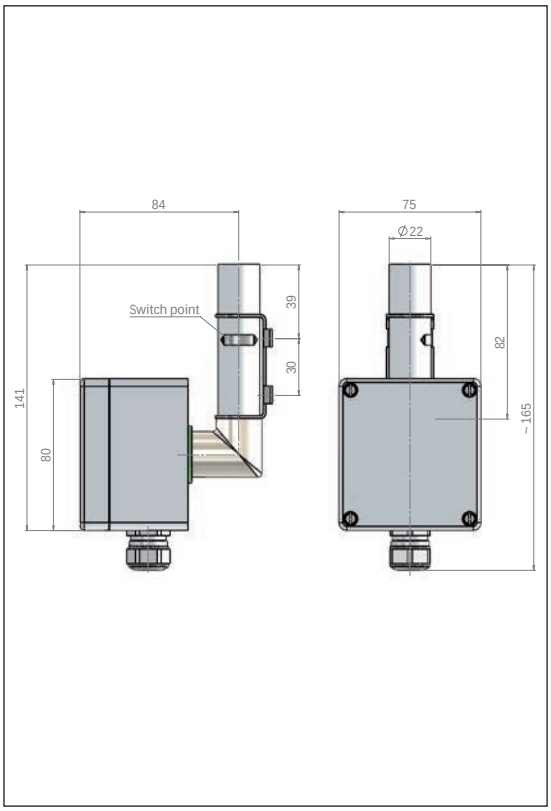

The top mounted level indicator-mini are based on a modular design and can be arranged individually.
Type key page 386 - 390

Type	**AIT** **AHT**

Armaflex isolation AIT

Material quality:	Cellular plastic based on synthetic rubber
Fire behaviour:	Self-extinguishing, not drippy, not flammable
Nominal thickness:	32 mm
Ambient temperature:	-50°C ... 105°C
UV-resistance:	No
Approvals:	-

Armaflex isolation AHT

Material quality:	Cellular plastic based on synthetic rubber
Fire behaviour:	Self-extinguishing, not drippy, not flammable
Nominal thickness:	25 mm
Ambient temperature:	-50°C ... 150°C
UV-resistance:	Yes
Approvals:	-

Type	**H..A** **H..B**

Self-regulating antifreeze heat tracing

Type:	H75A H75B acc. to EExe / T4
Terminal box:	GFK black with cable entry M25
Protective shell:	Fluorpolymer
Power supply:	230V AC
Power output:	76 W/m at 10°C
Holding temperature:	~10°C / Frost protection (32 mm Isolation necessary)
Steam-flushing:	No
Ambient temperature:	-40°C ... 75°C
Approvals / Certificates:	ATEX

Self-regulating antifreeze heat tracing

Type:	H150A H150B acc. to EExe / T2
Terminal box:	GFK black with cable entry M25
Protective shell:	Fluorpolymer
Power supply:	230V AC
Power output:	50 W/m at 10°C
Holding temperature:	~10°C / Frost protection (32 mm Isolation necessary)
Steam-flushing:	Yes
Ambient temperature:	-40°C ... 150°C
Approvals / Certificates:	ATEX

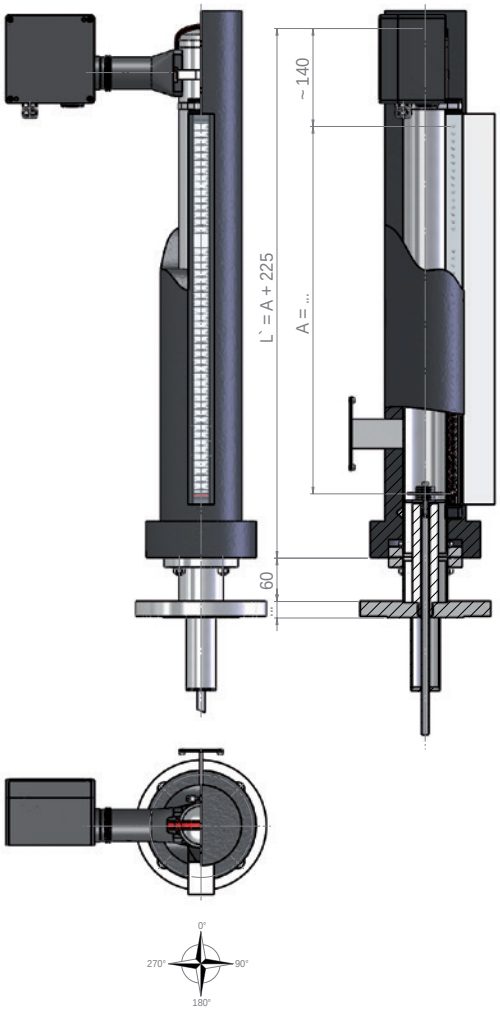

Approvals / Certificates

The top mounted level indicator-mini are based on a modular design and can be arranged individually.
Type key page 386 - 390

Heinrich Kübler AG
Ruessenstrasse 4 | CH-6340 Baar | Phone +41 (0)41 766 62 62 | Fax +41 (0)41 766 62 63 | E-Mail info@kubler.ch | Internet www.kubler.ch

Type	**SW**
Rock-wool isolation SW	
Material quality:	Rock-woll with crome-nickel cover (Removable)
Nominal thickness:	~50 mm
Ambient temperature:	-50°C ... 750°C
UV-resistance:	Yes
Approvals:	ATEX

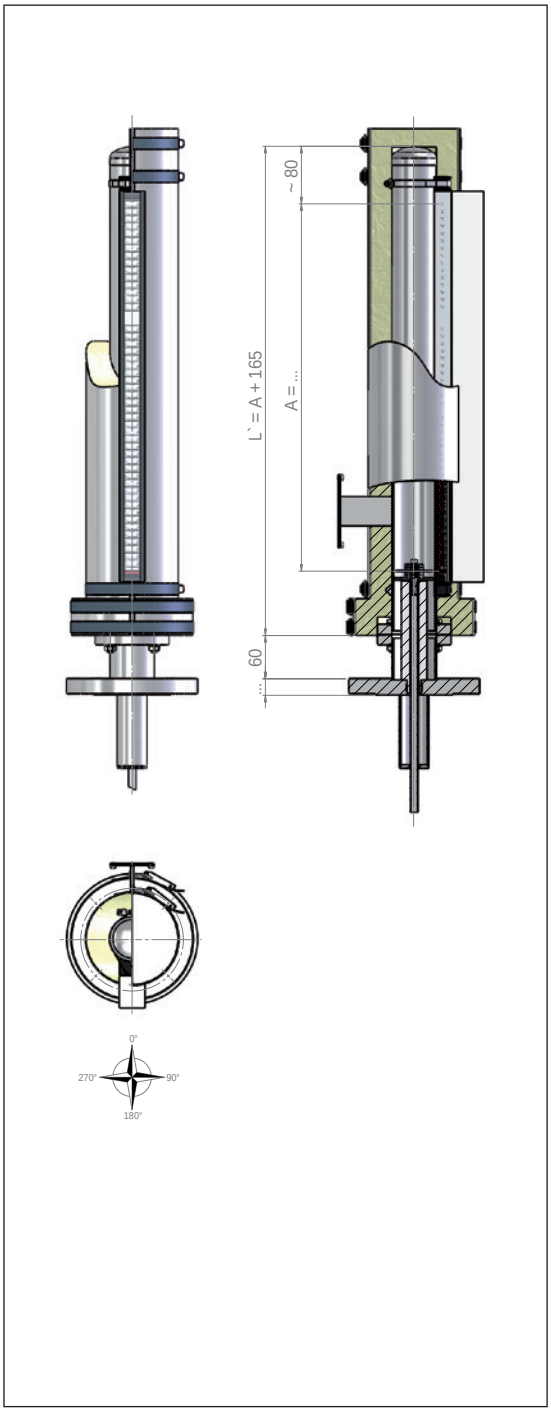

Approvals / Certificates

The top mounted level indicator-mini are based on a modular design and can be arranged individually.
Type key page 386 - 390

CERTIFICATES

Zertifikat

Heinrich Kübler AG
CH-6341 Baar

Zertifizierter Bereich
Ganzes Unternehmen

Tätigkeitsgebiet
Fühlstands-, Steuer- und Regeltechnik

Normative Grundlage
ISO 9001:2008 Qualitätsmanagementsystem

KESSELINSPEKTORAT
INSPECTION DES CHAUDIÈRES

SVTI ASIT

Zulassung

Heinrich Kübler AG
Ruessenstrasse 4
CH-6341 Baar

Heinrich Kübler AG
Ruessenstrasse 4
CH-6341 Baar

Zulassung: Nr. KIS.PQ.5499034

Walliselen, 01.11.2010

Leiter Kesselinspektorat

Sachverständiger

Umberto Rosso

IQNet
THE INTERNATIONAL CERTIFICATION NETWORK
CERTIFICATE
IQNet and SQS
hereby certify that the organisation

Heinrich Kübler AG
CH-6341 Baar

Certified area
Whole company

Field of activity
Level control instrumentation

has implemented and maintains a
Management System
which fulfils the requirements of the following standards:

ISO 9001:2008

Scope Nbr(s): 18
Issued on: 2011-06-27
Registration Number: CH-10106

Michael Drechsel
President of IQNet

Theodor Zehner
Managing Director SQS

KESSELINSPEKTORAT
INSPECTION DES CHAUDIÈRES

SVTI ASIT

Zulassung

Heinrich Kübler AG Steuer- & Regeltechnik
Ruessenstrasse 4
CH-6341 Baar

Heinrich Kübler AG Steuer- und Regeltechnik
Ruessenstrasse 4
CH-6341 Baar

Zulassung: Nr. KIS.VZ.5300240

Walliselen, 27.08.2007

Leiter Kesselinspektorat

Sachverständiger

B. Schüpbach, Obering.

Umberto Rosso

ZERTIFIKAT

Die Firma
Heinrich Kübler AG Steuer- und Regeltechnik
Ruessenstrasse 4
CH-6341 Baar
wurde als Hersteller nach
AD 2000-Merkblatt HP 0 und EN ISO 3834-3
überprüft.

Sie hat damit die schweißtechnischen Voraussetzungen zur Fertigung von Druckgeräten gemäß
Druckgeräterichtlinie 97/23/EG
nachgewiesen.

Unabhängig von dieser Bescheinigung sind die Verfahrensschritte gemäß dem jeweils gewählten Modul einzuhalten.

Die Firma verfügt über folgende Voraussetzungen:
- Einrichtungen, die eine sachgerechte und dem Stand der Technik entsprechende Herstellung und Prüfung gestatten,
- eine Qualitätsbeschreibung, die eine den Technischen Regeln entsprechende Verarbeitung und Prüfung der Werkstoffe sicherstellt,
- fachkundiges Aufsicht- und Prüfpersonal.

München, 17.10.2007

TÜV SÜD Industrie Service GmbH
TÜV CERT Zertifizierungsstelle für Druckgeräte

ZERTIFIKAT
Certificate

Interne Fertigungskontrolle mit Überwachung der Abnahme (Modul A1) nach Richtlinie 97/23/EG
Internal manufacturing control with surveillance of the assessment (Module A1) according to Directive 97/23/EC

Zertifikat-Nr.: IS-CH-DWS978-02-03-27945-001
Certificate No.

Name und Anschrift des Herstellers:
name and postal address of manufacturer:
Heinrich Kübler AG – KFG Level AG
Ruessenstrasse 4
CH-6340 Baar

Der Hersteller ist nach Prüfung der Voraussetzungen berechtigt, die von ihm im Rahmen des Geltungsbereichs hergestellten Druckgeräte mit unserer Kennzeichnung gemäß dem eingangs bezeichneten CE-Kennzeichen zu kennzeichnen.
The manufacturer is entitled, after examination of the requirements, authorised to provide his products equipment manufactured within the scope, after the successful affix our identification number to the CE mark as described.

CE 0036

Prüfbericht Nr.:
Test report No.
P-CH-SVTI-02-03-27945-001
CCB.EP.0802893

Geltungsbereich
Scope of application
Mini-Bypass-Niveauistandsanzeiger Typ 1010 Mini
Bypass-Niveauistandsanzeiger Typ 1010
Überlauf-Niveauistandsanzeiger Typ 1016
Mini-Überlauf-Niveauistandsanzeiger Typ 1016 Mini
Niveauanzeiger Schwimmer Typ 1020
Niveauanzeiger Schwimmer Magnet-Kopfer Typ 1020 K
Niveau-Magnetanzeiger Typ 1021
Niveau-Typ 1024
Endkontakt Typ 1058

Fertigungsgeräte
Manufacturing unit
Heinrich-Kübler AG – KFG Level AG | CH-6340 Baar

Walliselen, 09.02.2011

TÜV SÜD Industrie Service GmbH
Zertifizierungsstelle
Notified body

Dr. Ing. Otto Meyer

Weitere Informationen über das anerkannte Verfahren
Please write for details on the assessed page

TÜV Industrie Service GmbH
TÜV SÜD Group
Sitz der Gesellschaft: München
Handelsregister HRB 96869
Amtsgericht München

Tel.: 49 (0)7131 18 - 19 - 0
Fax: 49 (0)7131 18 - 19 - 10
E-Mail:
www.tuv-sud.de

Mitglied der
CERTIFICATION OF PRODUCTS
CEOC
International GmbH Germany

TÜV CERT
TÜV
SÜDDEUTSCHLAND

ZERTIFIKAT
Certificate

EG-Baumusterprüfung (Modul B) nach Richtlinie 97/23/EG
EC Type-examination (Module B) according to Directive 97/23/EC

Zertifikat-Nr.: CH-SVTI-02-03-27945-002
Certificate No.

Name und Anschrift des Herstellers:
Name and Postal Address of Manufacturer:
Heinrich Kübler AG – KFG Level AG
Ruessenstrasse 4
CH – 6341 Baar

Hiermit wird bescheinigt, daß das unten genannte EG-Baumuster die Anforderungen der Richtlinie 97/23/EG erfüllt.
We hereby certify that the type mentioned below meets the requirements of the Directive 97/23/EC.

CE 0036

Prüfbericht Nr.
Test Report No.
P-CH-SVTI-02-03-27945-002

Geltungsbereich
Scope of application
Bypass-Niveauistandsanzeiger Typ 1010
Mini Bypass-Niveauistandsanzeiger Typ 1010 Mini

Fertigungsstätte
Manufacturing point
Heinrich Kübler AG – KFG Level AG
CH – 6341 Baar

TÜV Süddeutschland
Bau und Betrieb GmbH
TÜV CERT Zertifizierungsstelle für Druckgeräte

Dr. Ing. Otto Meyer

Weitere Informationen über das anerkannte Verfahren
Please write for details on the assessed page

TÜV Industrie Service GmbH
TÜV SÜD Group
Sitz der Gesellschaft: München
Handelsregister HRB 96869
Amtsgericht München

Tel.: 49 (0)7131 18 - 19 - 0
Fax: 49 (0)7131 18 - 19 - 10
E-Mail:
www.tuv-sud.de

Mitglied der
CERTIFICATION OF PRODUCTS
CEOC
International GmbH Germany

TÜV CERT

ZERTIFIKAT

Die Benannte Stelle nach Druckgeräterichtlinie
- Zertifizierungsstelle für Qualitätssicherungssysteme -
der TÜV SÜD Industrie Service GmbH

bescheinigt, dass das Unternehmen

Heinrich Kübler AG
KFG Level AG
Ruessenstrasse 4
6341 Baar, Schweiz

für den Geltungsbereich

Herstellung und Vertrieb von
Niveaumess-Systemen, Steuer- und Regelgeräten
nach EG-Baumusterprüfungen

ein Qualitätssicherungssystem nach Druckgeräterichtlinie 97/23/EG
Anhang III, Modul D
eingeführt hat und anwendet.

Durch ein Audit, Bericht -Nr. SWTS-DGA-Q-040-08, wurde der Nachweis erbracht, dass die betreffenden Anforderungen erfüllt sind.

Der Hersteller ist berechtigt, die im Rahmen des Geltungsbereiches dieses Qualitätssicherungssystems hergestellten Druckgeräte bei der Kennzeichnung mit unserer Kenn-Nummer wie dargestellt zu versehen:

CE 0036

Zertifikat - Nr.: DGR-0036-QS-478-08

Walliselen, 19. August 2008

TÜV SÜD Industrie Service GmbH
Postfach
Sitz der Gesellschaft
München
Handelsregister
Amtsgericht München
Germany

Tel.: 49(0) 621 30 30 10
Fax: 49(0) 30 4156 1500
E-Mail:
www.tuv-sud.de

Mitglied der
CERTIFICATION OF PRODUCTS
CEOC
International GmbH Germany