HMI solutions

Catalog 2011

Beijer
ELECTRONICS

The link between man and machine

Beijer Electronics has been in the operating & monitoring business for more than 30 years. Our goal right from the start has been to develop and market products that meet the needs of our customers and are geared toward future applications.

As a specialist for HMI (Human Machine Interface) systems, we provide the right solutions to your visualization demands. With decades of experience in the HMI field, we make sure that your decision for our products is the right one and a reliable one.

As a multinational company we benefit from the expertise of our international development teams from all over the world. At our 4 production facilities in Germany, 2 in Sweden and Taiwan our employees are developing automation solutions for all markets.
You benefit from this international technology transfer because hardware and software are developed according to the latest processes, taking into particular account their performance capability. In other words, the best of what is developed from our locations is integrated into products for your markets.

We think global and act local. This guarantees short transport routes and fast delivery times for you. As a specialist for Human-Machine interfaces, we are constantly striving to optimize the relationship between manufacturer and user. This catalogue is a reliable and fast tool for finding the right solution and for your visualization requirements.

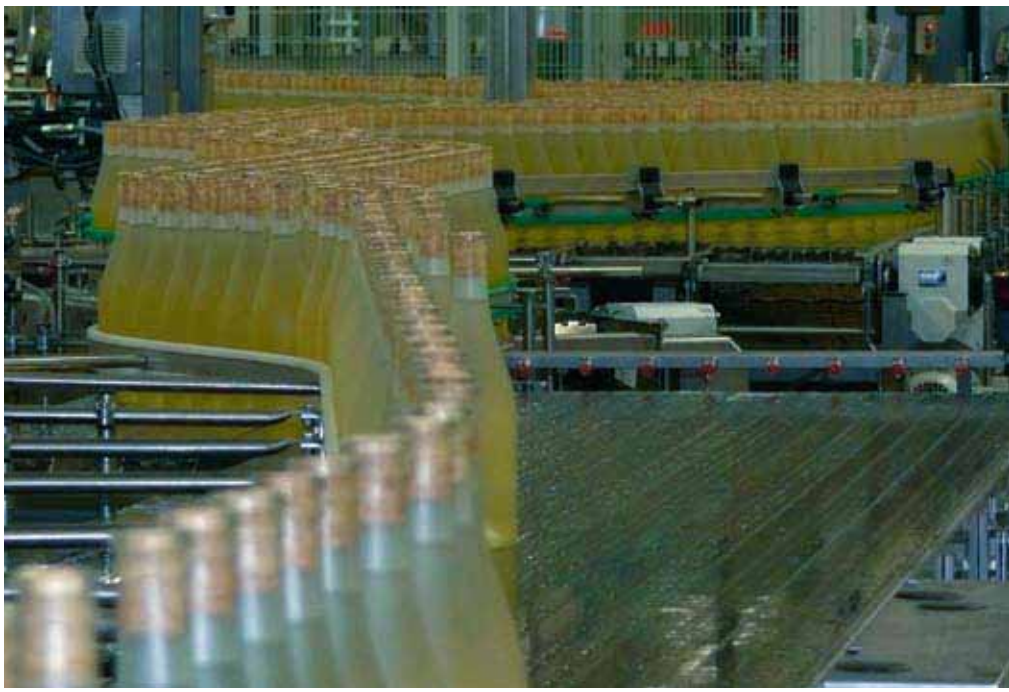

	iX Panel & iX Panel Pro	Industrial PC EPC series	Monitors MT series	Operator panel EXTER series	Operator panel H series
Use Display sizes in inches/cm	Machine-oriented use when trend-setting process visualization with realistic user interfaces is required.	Universal industrial application in combination with software from third-party suppliers, e.g. SCADA	Universal industrial application in combination with remote computer unit	Machine-oriented use for process operation in combination with a variety of controls	Machine and process operation for small to medium-sized applications
3 / 7.6	1.9			4.3 4.4	5.3
4 / 10.1	1.5			4.5 4.6	5.4 5.5
6 / 15.2	1.10 1.11			4.7	5.6
7 / 17.5	1.6 1.12 1.13 1.19	2.3 2.7		4.8	5.7
8 / 20.3		2.8			5.8
10 / 25.4	1.7 1.14 1.15 1.20	2.4 2.9		4.9	5.9
12 / 30.5	1.23	2.10 2.13	3.3		
15 / 38.1	1.16 1.21 1.24	2.5 2.11 2.14 2.19	3.4 3.6	4.10	
17 / 43.2	1.25	2.15 2.20			
19 / 48.2	1.26	2.16	3.5		

Content

Product overview	4
iX Panel & iX Panel Pro Innovative HMI solutions that combines high-performance hardware with State-of-the-art software which are suitable for any industrial application.	1.1
Industrial PC EPC High-performance industrial PCs for SCADA and 3rd party software visualizations. Modular design which guarantees high flexibility.	2.1
MT monitors Flat screen monitors for industrial use in combination with remote computer units.	3.1
EXTER operator panel Operator panels with keypad and touchscreen design for the simple and intuitive operation of demanding machine processes.	4.1
H-series operator panel Operator panels with excellent price/performance ratio for small to medium-sized applications.	5.1
Industrial solutions	6.1
References	86
Contact	87

iX - The world´s most graphic HMI solution.
Truly open.

iX - HMI Solutions

Process visualizations are becoming increasingly complex and user requirements even more demanding. The trend is now for authentic 3D representations combined with clear icons as displayed for example by the modern smartphones. Aesthetically pleasing user interfaces motivate the operator to engage with his working environment more positively. This results in greater efficiency and thus fewer machine and plant downtimes. And smooth running production means greater return. iX is setting the trend when it comes to HMI solutions, fully meeting the current and future requirements of the user's environment.

It is a software-based HMI concept which closes the gap between proprietary operator panels and cost-intensive SCADA license solutions. The software comprises of iX Developer and iX Runtime and are available in several specifications. Such a large selection of suitable operator panels means there is a tailor-made solution for almost every industry application.

The most impressive features of iX are its ease of operation, comprehensive range of functions and flexibility. Thanks to intuitive handling, you can develop impressive projects with minimal effort. Costly development time is reduced to an absolute minimum. All graphics can be enlarged without loss of quality and multiplied regardless of resolution. This is made possible by the vector-based graphic framework from Microsoft®.

The truly open platform provides plenty of room for your individual requirements. It gives you the power to gain a competitive edge with your own special functions. Consistent incorporation of the very latest Microsoft® .Net framework technology gives you a future-proof tool, for which software updates and support will still be available after years of operation. Discover in the following pages the many advantages iX can bring to you.

What is iX?

The perfect HMI package

iX is a complete HMI solution which is available in a variety of different designs. Together with the iX Panel or a PC-based iX Panel Pro, this concept is suitable for any process application in a number of industrial sectors.

iX Panel

The iX Panel series combines impressive visualization competence and a robust yet lightweight aluminum design with a universal HMI solution. The innovative devices meet international industry standards such as IP66 and are available in a number of different display sizes with keypads or touchscreens.

iX Panel Pro

The iX Panel Pro series boasts the highest HMI performance thanks to powerful Intel® C2D processors, a completely open and expandable HMI platform for industry applications. Both product series have high-contrast TFT touch displays and are delivered with pre-installed iX Runtime. A box PC completes this professional package.

Further technical information can be found at www.beijerelectronics.com

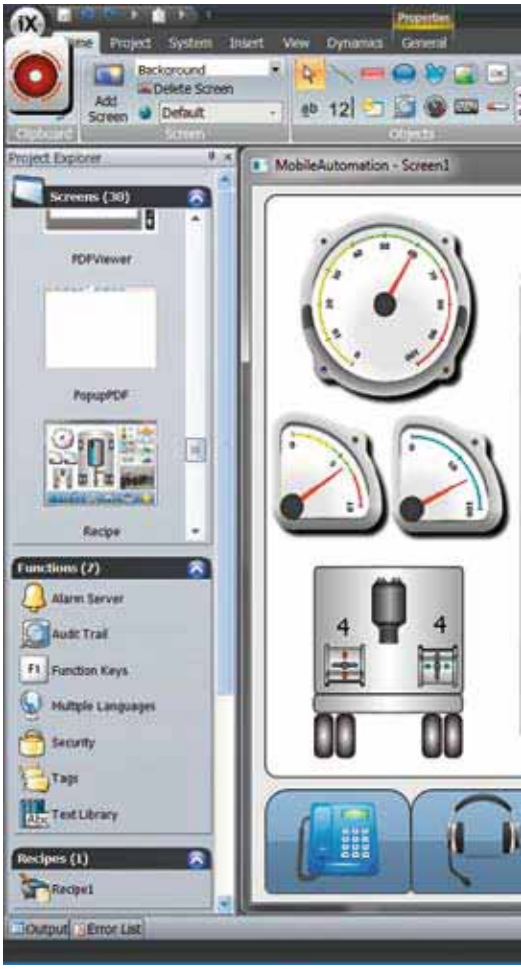

Trend-setting visualization

Vector-based graphics
Scaling and rotation of the graphics without any loss of quality.

Windows Media Items
Interface displays using iX media items such as Internet Browser, Media Player and PDF Viewer.

Dynamic
Through the use of dynamic objects and their movement, generate increased interest from the operator.

Navigation control
Create an overview of all displays using authentic preview images.

High-performance HMI functions

Security
Create safe access authorization with a password-protected user structure.

Data logging
Use time- or event-based data acquisition for process documentation or maintenance.

Remote maintenance
Improve customer support and troubleshooting measures using remote access.

Alarm Management
Reports activity via the screen, printer, by SMS or email.

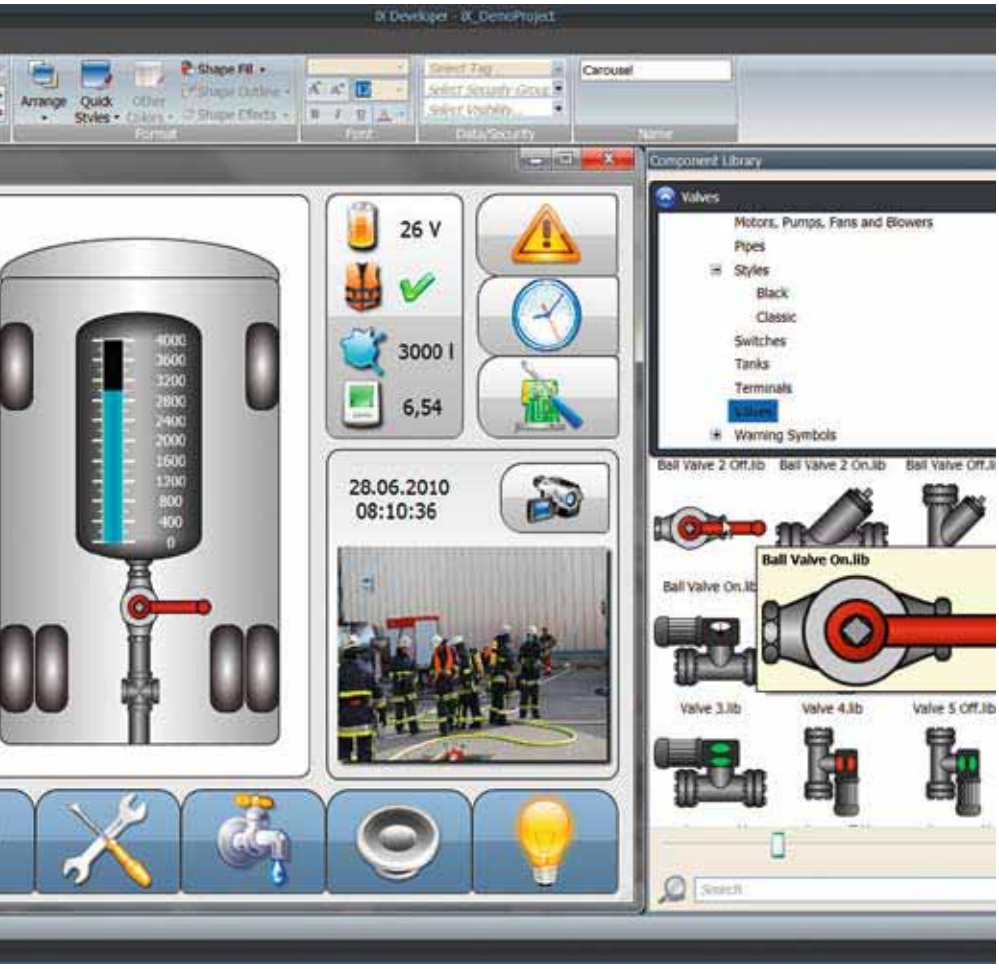

iX Software

The software comprises of iX Developer and iX Runtime, with the runtime available with 250, 2000 and 4000 addressable tags (intended for use on third-party computers). The iX Panel and iX Panel Pro series come with an unlimited Runtime license. With the iX Developer the user creates clearly arranged user interfaces within an intuitive project environment.

Efficient project creation

User-friendly project environment
Create complete HMI solutions in an intuitive Windows environment.

Multi-Edit
Change object properties such as background color, font, tags, etc. for several objects at the same time.

Navigation Manager
Clearly show how all the displays used are connected to each other.

Simulation
Use the multi-purpose project simulations in both on and offline mode.

Unlimited possibilities

.Net Import
Import your own or external .Net controls and use them in your projects.

OPC Connection
With OPC, use the industry standard for real-time communication with all leading automation systems.

SQL Connection
Benefit from the quick management of databases.

C# Scripting
Customize HMI functions with C# Scripts or develop your own objects.

Operator panel - iX Panel TxA

Characteristics

- Latest display technology
- Dimmable LED background lighting
- Compact dimensions
- High-quality industrial design
- Unlimited iX Runtime
- SD card expansion
- Real-time clock
- Available in display sizes 4", 7", 10"

TECHNICAL DATA - iX Panel TxA PRODUCT GROUP	
Front panel	
Type of data entry	Resistive touch
Degree of protection	IP 65 front-mounted
Power supply	
Operating voltage	24 VDC
Power consumption	max. 2 A
System	
Processor	ARM 9
Application memory	80 MB
External storage medium	SD card slot
Operating system	Windows CE
Interfaces	
Serial	2 x RS232 2 x RS422/485
Ethernet	10/100 Mbit/s RJ45
USB	USB host
General information	
Frame material	Aluminum
Foil	Acid-resistant polyester Foil
Certification	CE, UL 508*

* In progress

iX Panel T4A

TECHNICAL DATA - iX Panel T4A (for further data, see page 1.4)	
Display	
Size in inches	4.3"
Resolution in pixels	480 x 272
Coloration	65,000 colors TFT
MTBF backlight	> 40,000 hrs
General information	
External dimensions in mm W x H x D	145 x 103 x 49
Panel profile in W x H in mm	128 x 87
VESA	50, 75
Weight	ca. 0.5 kg
Order information	
Description of item	iX Panel T4A

Dimensional drawings in mm

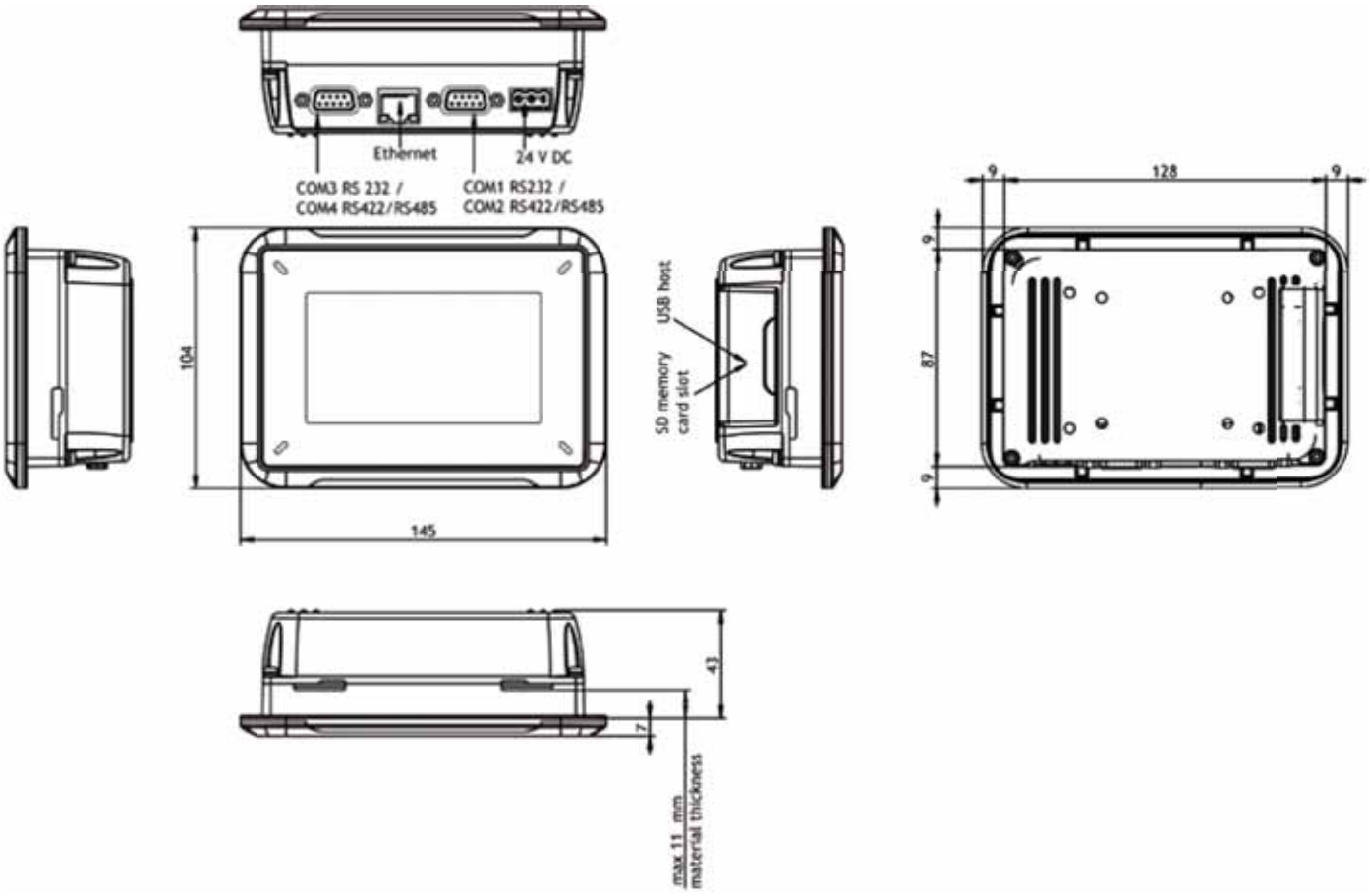

iX Panel T7A

TECHNICAL DATA - iX Panel T7A (for further data, see page 1.4)	
Display	
Size in inches	7"
Resolution in pixels	800 x 480
Coloration	65,000 colors TFT
MTBF backlight	20,000 hrs
General information	
External dimensions in mm W x H x D	204 x 143 x 49
Panel profile in W x H in mm	187 x 126
VESA	50, 75
Weight	ca. 1.2 kg
Order information	
Description of item	iX Panel T7A

Dimensional drawings in mm

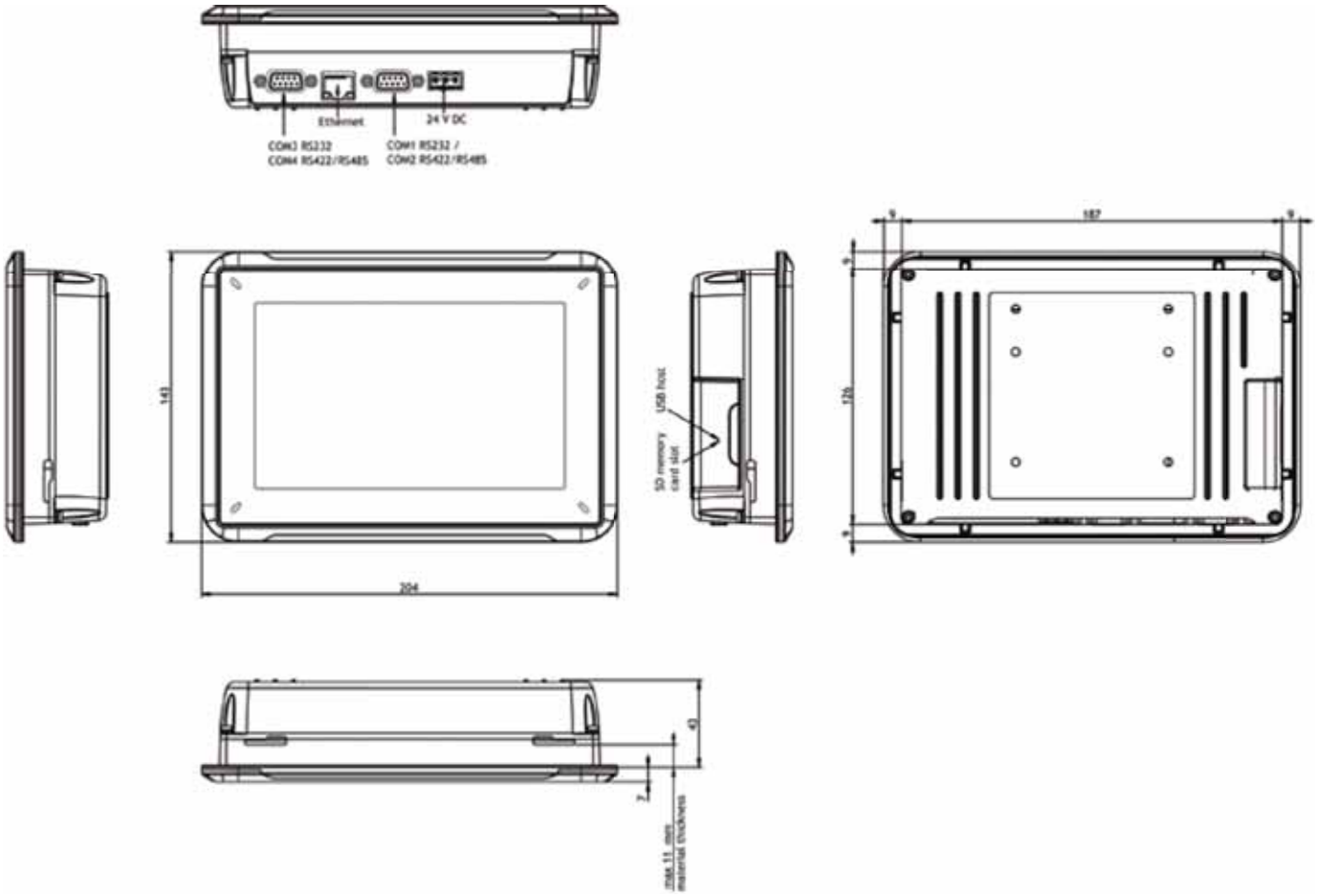

iX Panel T10A

TECHNICAL DATA - iX Panel T10A (for further data, see page 1.4)	
Display	
Size in inches	10.4"
Resolution in pixels	640 x 480
Coloration	65,000 colors TFT
MTBF backlight	> 40,000 hrs
General information	
External dimensions in mm W x H x D	280 x 228 x 51
Panel profile in W x H in mm	262 x 209
VESA	50, 75
Weight	ca. 2.4 kg
Order information	
Description of item	iX Panel T10A

Dimensional drawings in mm

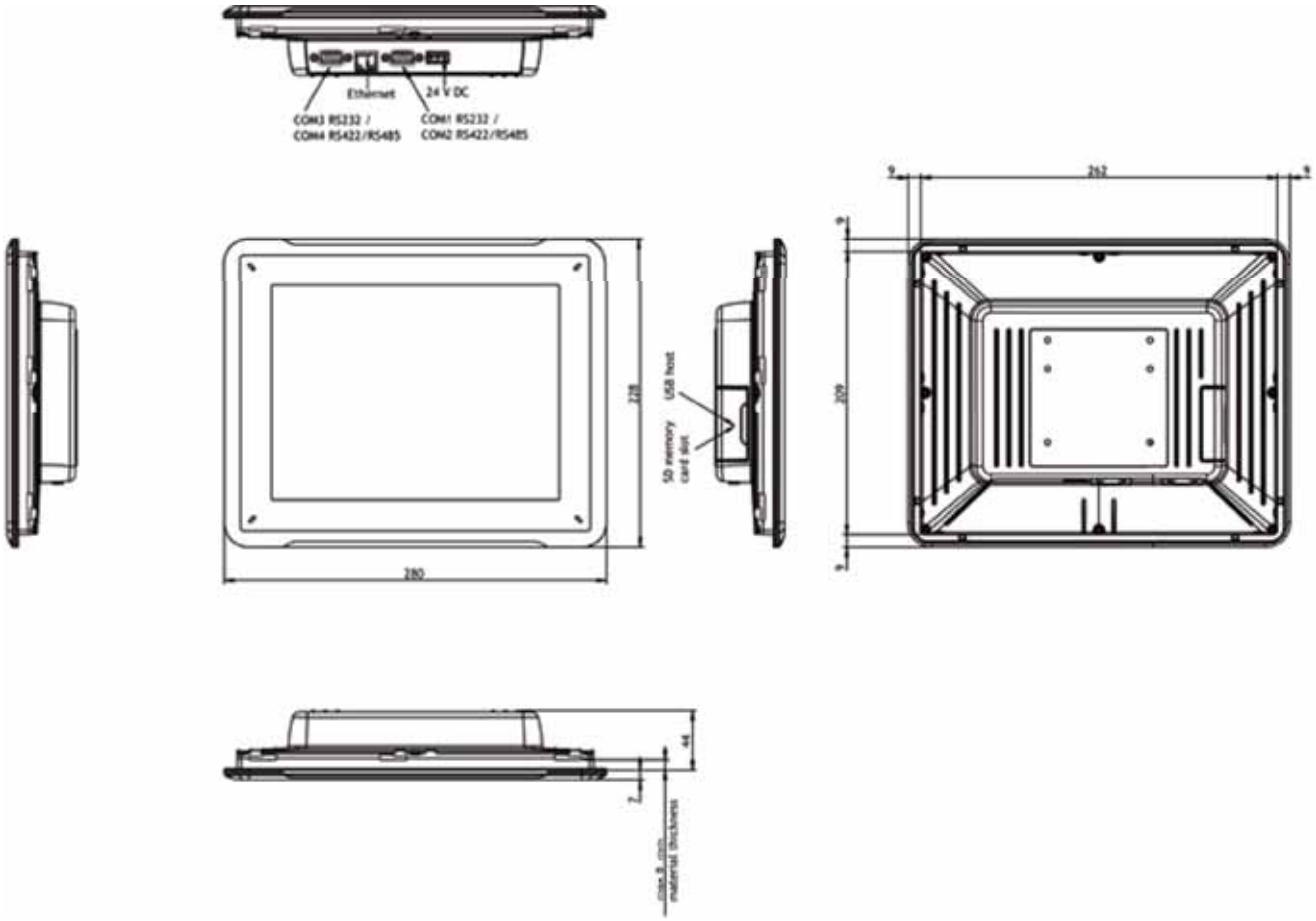

Operator panel - iX Panel

Characteristics

- Robust industrial design
- Dimmable background lighting
- Keypads and touchscreens
- Low installation depth
- Unlimited iX Runtime
- Display sizes from 3.5 to 15 inches

TECHNICAL DATA - iX Panel PRODUCT GROUP	
Display	
Degree of protection	IP66 / NEMA 4 front-mounted
Voltage supply	
Operating voltage	24 VDC
Power consumption	See detailed description
System	
Processor	XScale
Application memory	12 MB / >500 MB
External storage medium (CFC)	See detailed description
Operating system	Windows CE
Interfaces	
Serial	1 x RS232 1 x 422/485
Ethernet	10/100 Mbit/s RJ45
USB	See detailed description
Communications module	Profibus DP, MPI, CAN J1939
General information	
Frame material	Aluminum
Foil	Acid-resistant polyester Foil
Operating temperature	0 to 50° C
Storage temperature	-20 to 60° C

iX Panel T40

TECHNICAL DATA - iX Panel T40 (for further data, see page 1.8)	
Display	
Size in inches	3.5 "
Resolution in pixels	320 x 240
Coloration	65,000 colors TFT
MTBF backlight	> 10,000 hrs
Type of data entry	Resistive touch
Voltage supply	
Power consumption	max. 0.35 A
System	
Application memory	12 MB
External storage medium (CFC)	-
Interfaces	
USB	USB host
General information	
External dimensions in mm W x H x D	155 x 119 x 63
Panel profile in W x H in mm	139 x 105
Weight	ca. 0.6 kg
Order information	
Description of item	iX Panel T40

Dimensional drawings in mm

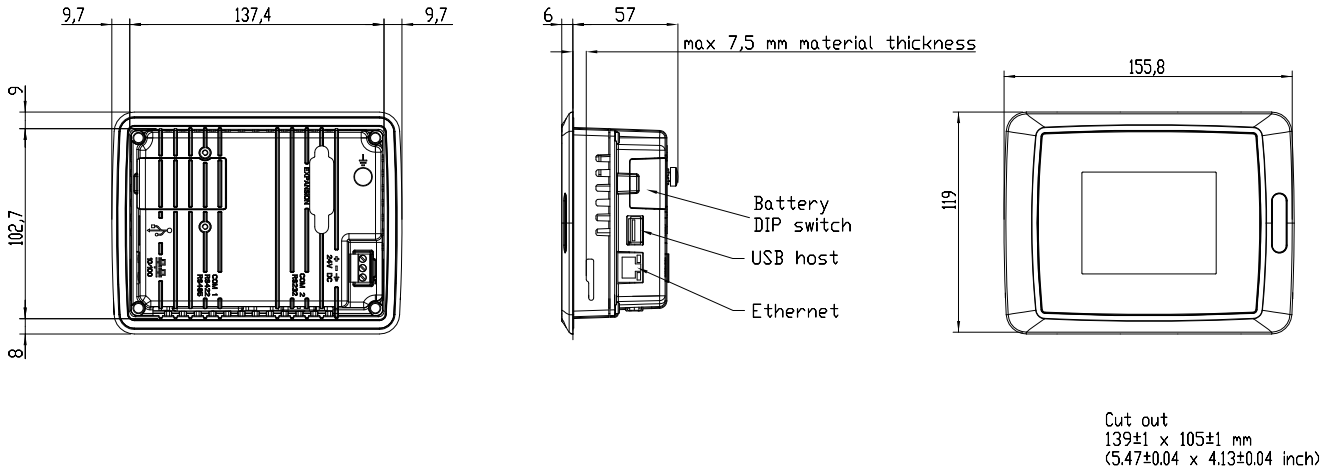

iX Panel K60

TECHNICAL DATA - iX Panel K60 (for further data, see page 1.8)	
Display	
Size in inches	5.7"
Resolution in pixels	320 x 240
Coloration	65,000 colors TFT
MTBF backlight	> 40,000 hrs
Type of data entry	Alphanumeric keypad
Voltage supply	
Power consumption	max. 0.5 A
System	
Application memory	12 MB
External storage medium (CFC)	-
Interfaces	
USB	USB host
General information	
External dimensions in mm W x H x D	275 x 168 x 63
Panel profile in W x H in mm	240 x 130
Weight	ca. 1.1 kg
Order information	
Description of item	iX Panel K60

Dimensional drawings in mm

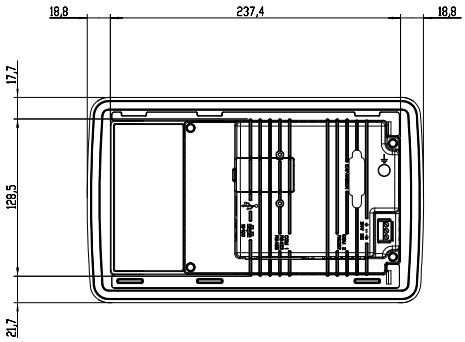

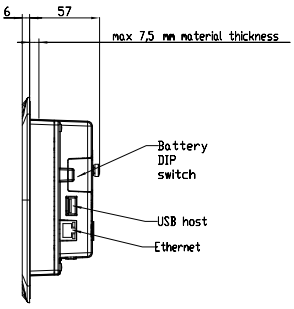

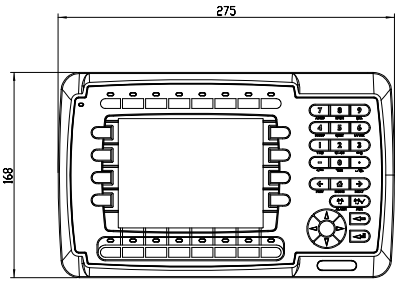

Cut out
240±1 x 131±1 mm
(9.45±0.04 x 5.12±0.04 inch)

iX Panel T60

TECHNICAL DATA - EXTER T60 (for further data, see page 1.8)	
Display	
Size in inches	5.7"
Resolution in pixels	320 x 240
Coloration	65,000 colors TFT
MTBF backlight	> 40,000 hrs
Type of data entry	Resistive touch
Voltage supply	
Power consumption	max. 0.45 A
System	
Application memory	12 MB
External storage medium (CFC)	-
Interfaces	
USB	USB host
General information	
External dimensions in mm W x H x D	201 x 152 x 63
Panel profile in W x H in mm	180 x 130
Weight	ca. 0.9 kg
Order information	
Description of item	iX Panel T60

Dimensional drawings in mm

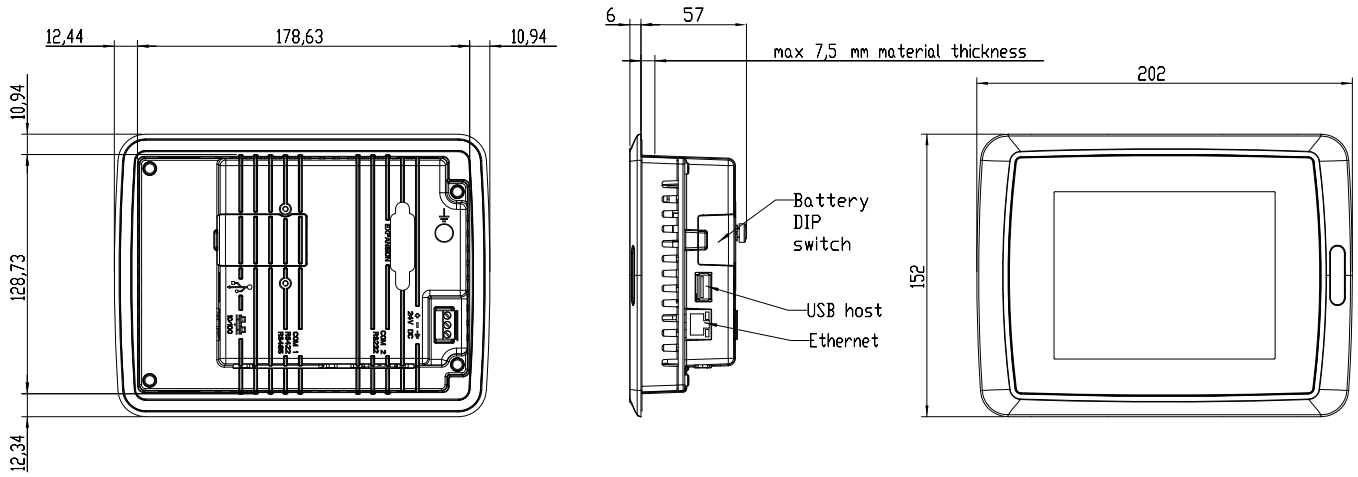

Cut out
180±1 x 130±1 mm
(7.09±0.04 x 5.12±0.04 inch)

iX Panel K70

TECHNICAL DATA - iX Panel K70 (for further data, see page 1.8)	
Display	
Size in inches	6.5"
Resolution in pixels	640 x 480
Coloration	65,000 colors TFT
MTBF backlight	> 40,000 hrs
Type of data entry	Alphanumeric keypad
Voltage supply	
Power consumption	max. 0.9 A
System	
Application memory	12 MB
External storage medium (CFC)	yes
Interfaces	
USB	USB host / USB device
General information	
External dimensions in mm W x H x D	285 x 177 x 62
Panel profile in W x H in mm	246 x 139
Weight	ca. 1.5 kg
Order information	
Description of item	iX Panel K70

Dimensional drawings in mm

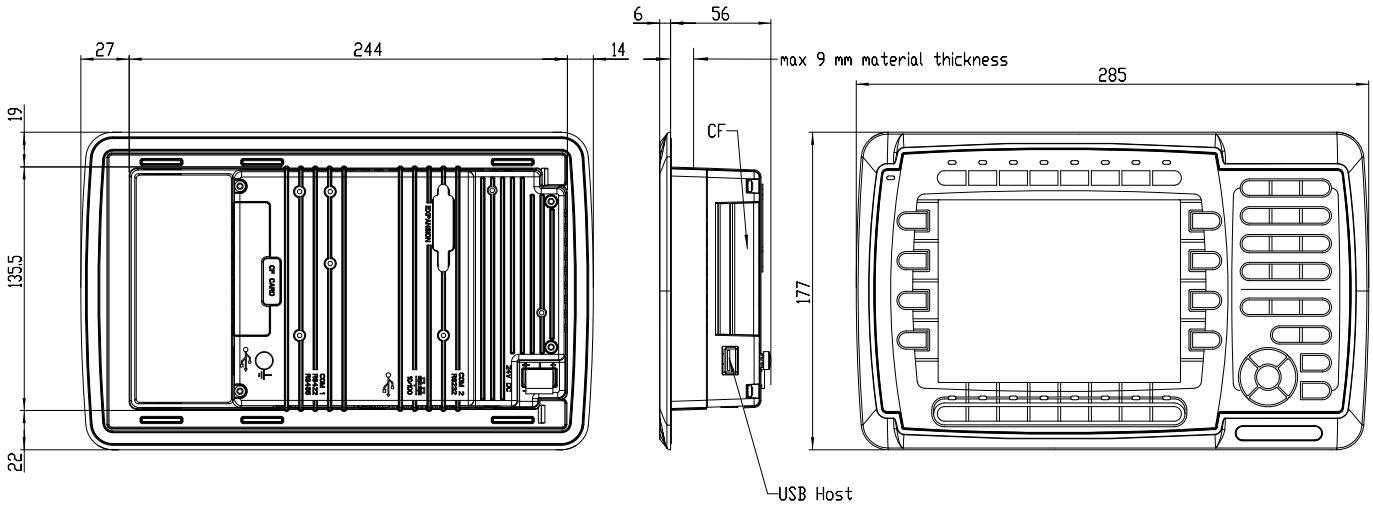

Cut out
245.5±1 x 138.5±1 mm
(9.67±0.04 x 5.45±0.04 inch)

iX Panel T70

TECHNICAL DATA - iX Panel T70 (for further data, see page 1.8)	
Display	
Size in inches	6.5"
Resolution in pixels	640 x 480
Coloration	65,000 colors TFT
MTBF backlight	> 40,000 hrs
Type of data entry	Resistive touch
Voltage supply	
Power consumption	max. 0.9 A
System	
Application memory	> 500 MB
External storage medium (CFC)	yes
Interfaces	
USB	USB host / USB device
General information	
External dimensions in mm W x H x D	219 x 154 x 61
Panel profile in W x H in mm	189 x 138
Weight	ca. 1.3 kg
Order information	
Description of item	iX Panel T70

Dimensional drawings in mm

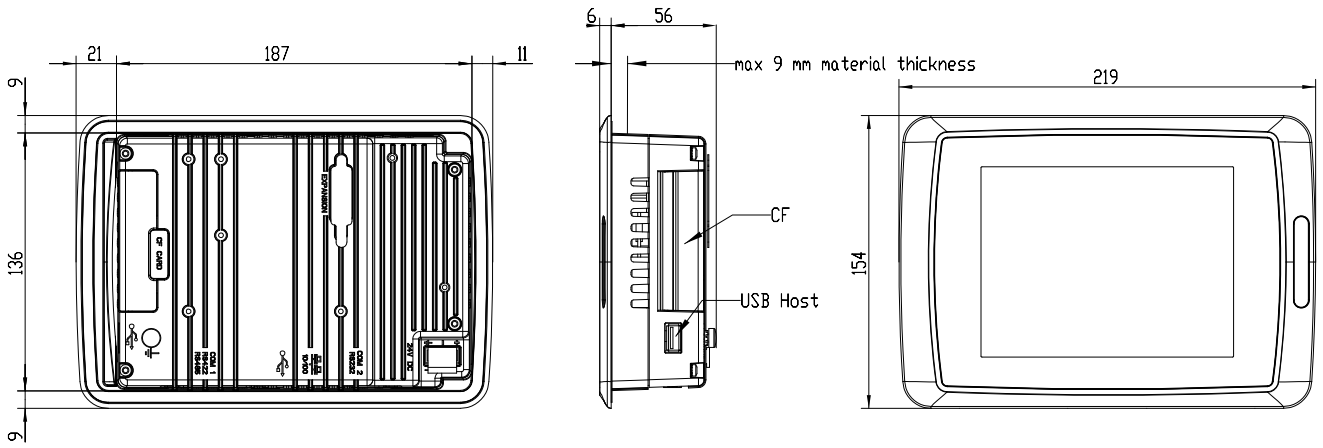

Cut out
188.5±1 x 137.5±1 mm
(7.42±0.04 x 5.41±0.04 inch)

iX Panel K100

TECHNICAL DATA - iX Panel K100 (for further data, see page 1.8)	
Display	
Size in inches	10.4"
Resolution in pixels	800 x 600
Coloration	65,000 colors TFT
MTBF backlight	> 40,000 hrs
Type of data entry	Alphanumeric keypad
Voltage supply	
Power consumption	max. 1 A
System	
Application memory	> 500 MB
External storage medium (CFC)	yes
Interfaces	
USB	USB host
General information	
External dimensions in mm W x H x D	382 x 252 x 64
Panel profile in W x H in mm	343 x 208
Weight	ca. 2.5 kg
Order information	
Description of item	iX Panel K100

Dimensional drawings in mm

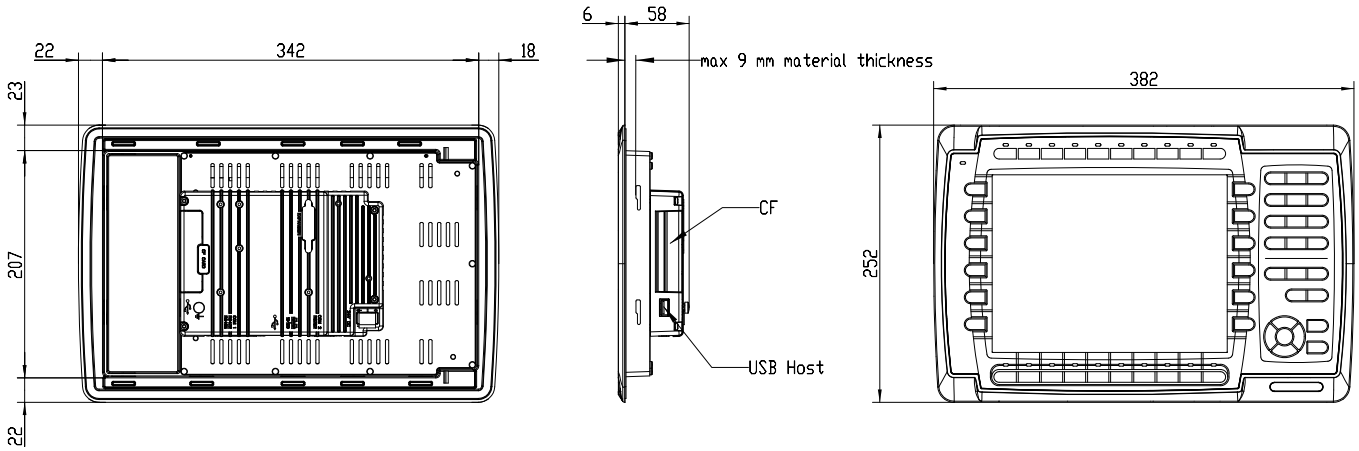

iX Panel T100

TECHNICAL DATA - iX Panel T100 (for further data, see page 1.8)	
Display	
Size in inches	10.4"
Resolution in pixels	800 x 600
Coloration	65,000 colors TFT
MTBF backlight	> 40,000 hrs
Type of data entry	Resistive touch
Voltage supply	
Power consumption	max. 1 A
System	
Application memory	> 500 MB
External storage medium (CFC)	yes
Interfaces	
USB	USB host
General information	
External dimensions in mm W x H x D	302 x 228 x 64
Panel profile in W x H in mm	265 x 206
Weight	ca. 2.5 kg
Order information	
Description of item	iX Panel T100

Dimensional drawings in mm

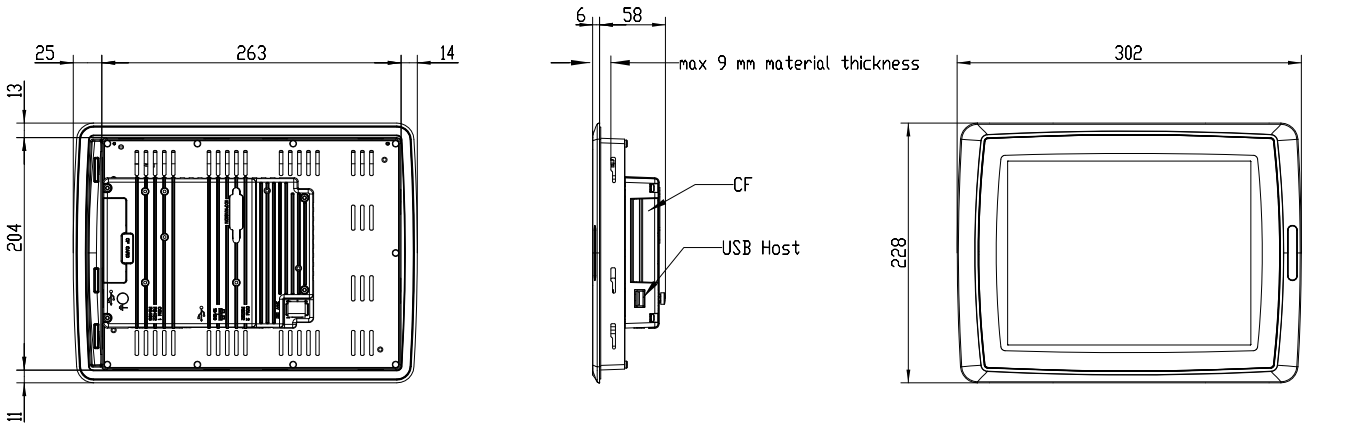

Cut out
264.5±1 x 206±1 mm
(10.4±0.04 x 8.1±0.04 inch)

iX Panel T150

TECHNICAL DATA - iX Panel T150 (for further data, see page 1.8)	
Display	
Size in inches	15"
Resolution in pixels	1024 x 768
Coloration	65,000 colors TFT
MTBF backlight	> 40,000 hrs
Type of data entry	Resistive touch
Voltage supply	
Power consumption	max. 1.7 A
System	
Application memory	> 500 MB
External storage medium (CFC)	yes
Interfaces	
USB	USB host / USB device
General information	
External dimensions in mm W x H x D	398 x 304 x 66
Panel profile in W x H in mm	356 x 279
Weight	ca. 4 kg
Order information	
Description of item	iX Panel T150

Dimensional drawings in mm

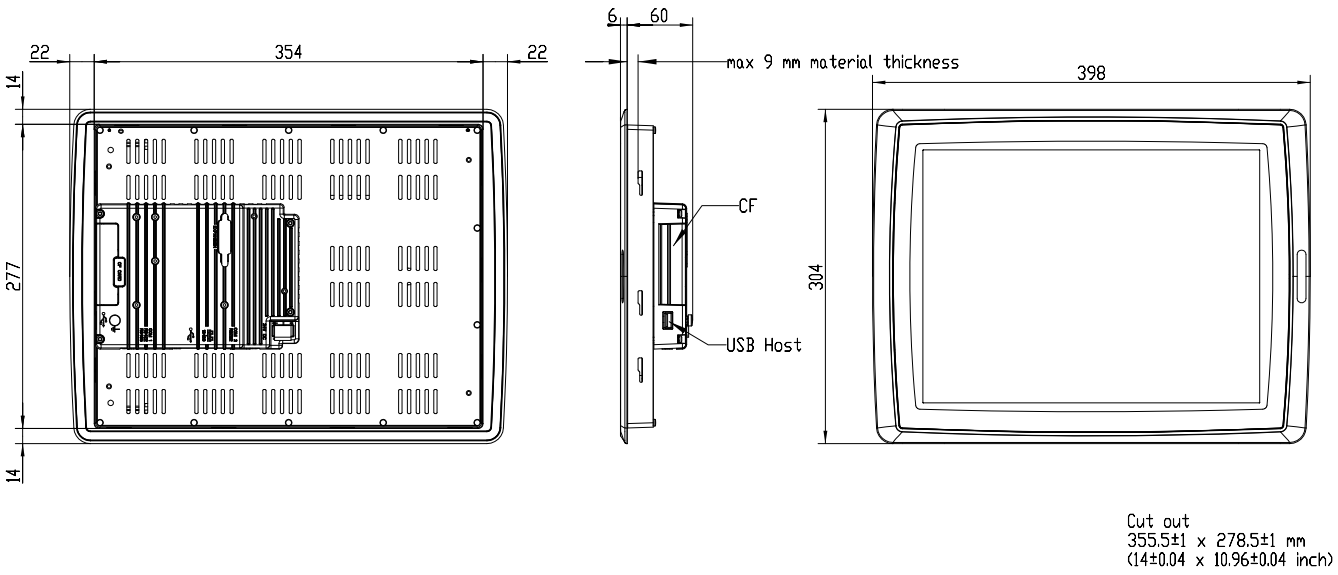

Cut out
355.5±1 x 278.5±1 mm
(14±0.04 x 10.96±0.04 inch)

Operator panel - iX Panel TA

Characteristics

- Robust industrial design
- Expanded application memory
- High process performance
- Unlimited iX Runtime
- Data logging on SD card
- Dual LAN interface
- Display sizes from 6 to 15 inches

TECHNICAL DATA - iX Panel TA PRODUCT GROUP	
Display	
Degree of protection	IP66 / NEMA 4 front-mounted
Voltage supply	
Operating voltage	24 VDC
Power consumption	See detailed description
System	
Processor	Intel® Atom™ Z series
Application memory	1.7 GB
External storage medium (CFC)	SD card slot
Operating system	Windows CE
Interfaces	
Serial	1 x RS232 1 x 422/485
Ethernet	1 x 10/100/1000 Mbit/s 1 x 10/100 Mbit/s
USB	USB host 2.0
Communications module	Profibus DP, MPI, CAN J1939
General information	
Frame material	Aluminum
Foil	Acid-resistant polyester Foil
Operating temperature	0 to 50° C
Storage temperature	-20 to 60° C

iX Panel TA70

TECHNICAL DATA - iX Panel TA70 (for further data, see page 1.18)	
Display	
Size in inches	6.5"
Resolution in pixels	640 x 480
Coloration	65,000 colors TFT
MTBF backlight	> 40,000 hrs
Type of data entry	Resistive touch
Voltage supply	
Power consumption	max. 1.3 A
General information	
External dimensions in mm W x H x D	219 x 154 x 61
Panel profile in W x H in mm	189 x 138
Weight	ca. 1.3 kg
Order information	
Description of item	iX Panel TA70

Dimensional drawings in mm

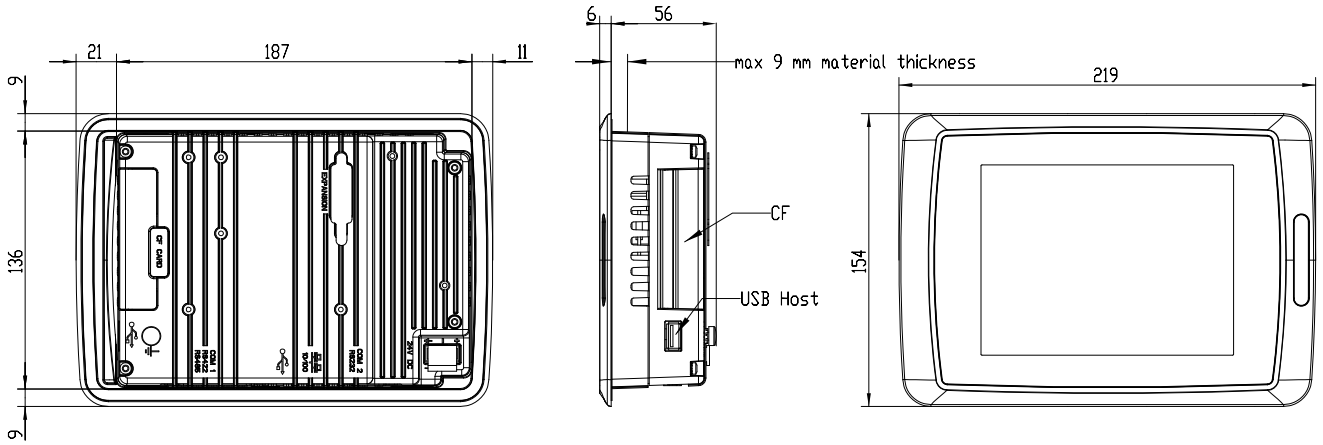

Cut out
188.5±1 x 137.5±1 mm
(7.42±0.04 x 5.41±0.04 inch)

iX Panel TA100

TECHNICAL DATA - iX Panel TA100 (for further data, see page 1.18)	
Display	
Size in inches	10.4"
Resolution in pixels	800 x 600
Coloration	65,000 colors TFT
MTBF backlight	> 40,000 hrs
Type of data entry	Resistive touch
Voltage supply	
Power consumption	max. 1.4 A
General information	
External dimensions in mm W x H x D	302 x 228 x 64
Panel profile in W x H in mm	265 x 206
Weight	ca. 2.5 kg
Order information	
Description of item	iX Panel TA100

Dimensional drawings in mm

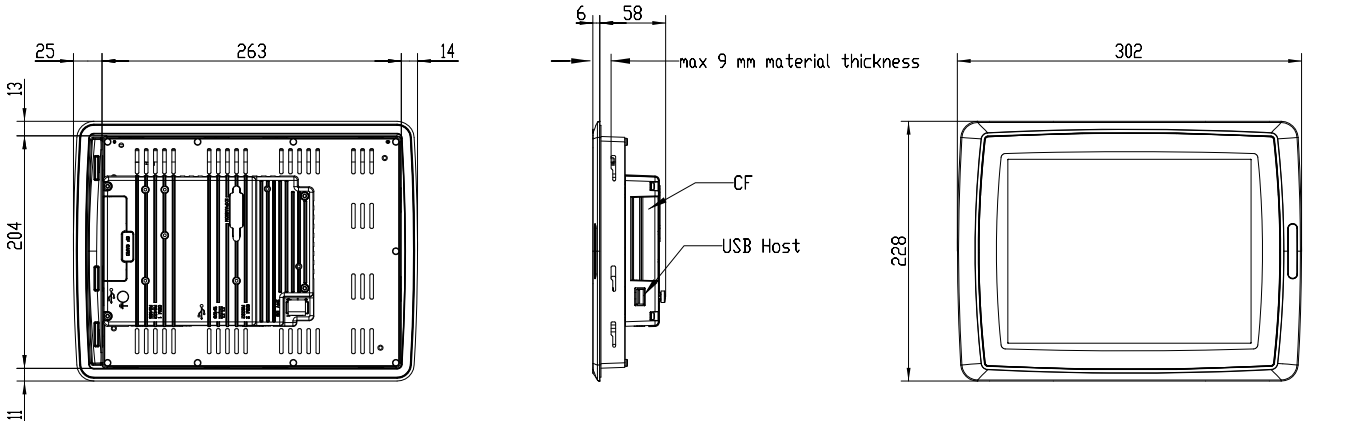

Cut out
264.5±1 x 206±1 mm
(10.4±0.04 x 8.1±0.04 inch)

iX Panel TA150

TECHNICAL DATA - iX Panel TA150 (for further data, see page 1.18)	
Display	
Size in inches	15"
Resolution in pixels	1024 x 768
Coloration	65,000 colors TFT
MTBF backlight	> 40,000 hrs
Type of data entry	Resistive touch
Voltage supply	
Power consumption	max. 2.1 A
General information	
External dimensions in mm W x H x D	398 x 304 x 66
Panel profile in W x H in mm	356 x 279
Weight	ca. 4 kg
Order information	
Description of item	iX Panel TA150

Dimensional drawings in mm

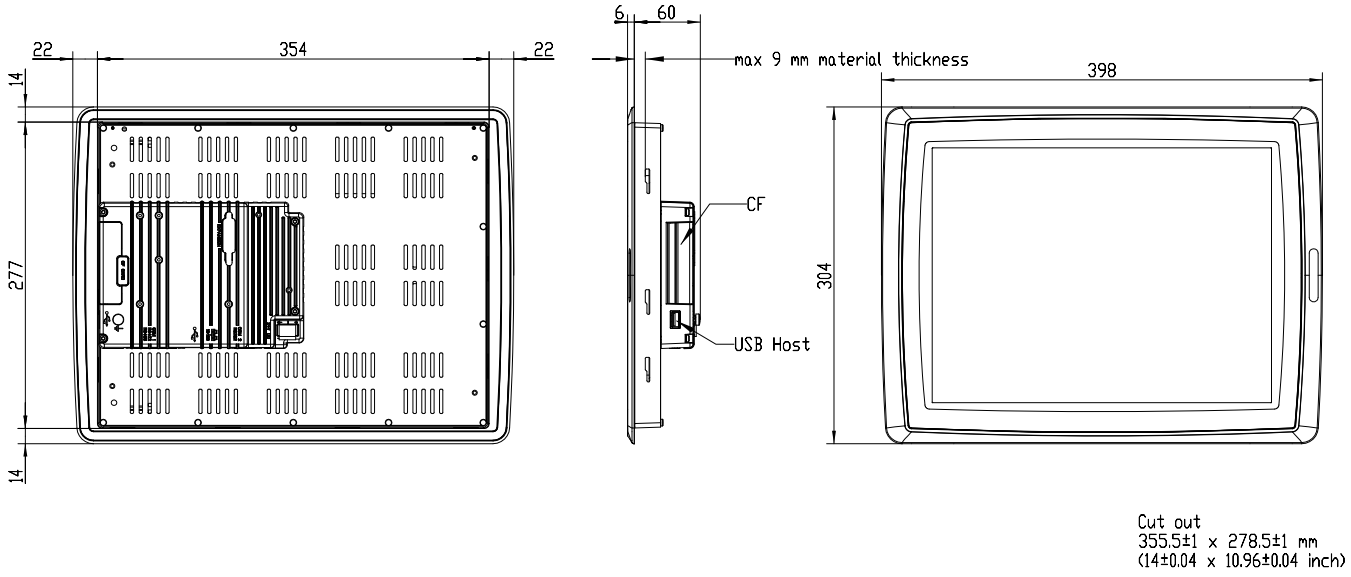

Cut out
355.5±1 x 278.5±1 mm
(14±0.04 x 10.96±0.04 inch)

Operator panel - iX Panel Pro C2D

Characteristics

- Robust industrial design
- Open PC architecture
- 24 VDC or 230 VAC internal
- Unlimited iX Runtime
- 4 x USB interface
- Dual GLAN interface
- Available sizes: 12", 15", 17", 19"

TECHNICAL DATA - iX Panel Pro C2D PRODUCT GROUP	
Front panel	
Type of data entry	Resistive touch
MTBF backlight	> 40,000 hrs
Degree of protection	IP 65 front-mounted
Power supply	
Operating voltage	24 VDC +/- 20% or 115-230 +/- 15% VAC
Power consumption	ca. 4.0 / 1.0 A
System	
Processor	Intel® Core2Duo 2.2 GHz / Celeron > 1.6 GHz
Main memory	1 GB / 2 GB / 4 GB
External storage medium (CFC)	2 - 8 GB
Internal mass memory (CFC/HDD)	4 - 8 GB / HDD automotive 80 GB / SSD 64-128 GB
Operating system	Windows XP professional, Windows XP embedded, Windows 7*
Interfaces	
Serial	2 x RS232
Ethernet	2 x 10/100/1000 Mbit/s
Keypad / Mouse	2 x PS/2
Monitor	VGA + DVI-I
USB	4 x USB 2.0 optional front USB
Slots	2 x PCI (max. 220 mm long)
Communications module	MPI, Profibus, CANopen
General information	
Frame material	Aluminum
Foil	Acid-resistant polyester Foil

*in progress

iX Panel Pro T120 C2D

TECHNICAL DATA - iX Panel Pro T120 C2D (for further data, see page 1.22)	
Front panel	
Size in inches	12.1”
Resolution in pixels	800 x 600
Coloration	16 million colors TFT
General information	
External dimensions in mm W x H x D	364 x 296 x 133
Panel profile in W x H in mm	345 x 277
Weight	ca. 7 kg
Order information	
Description of item	iX Panel Pro T120 C2D

Dimensional drawings in mm

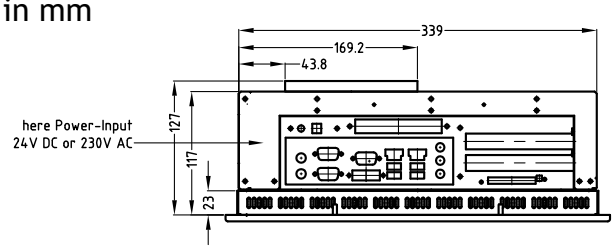

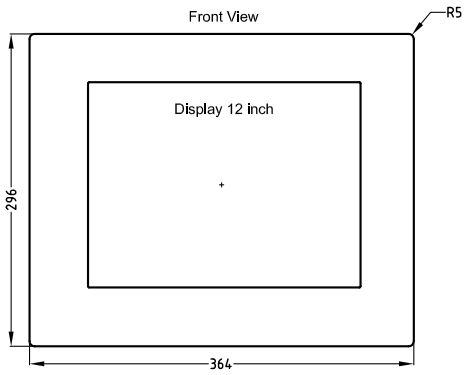

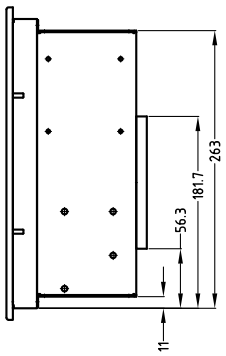

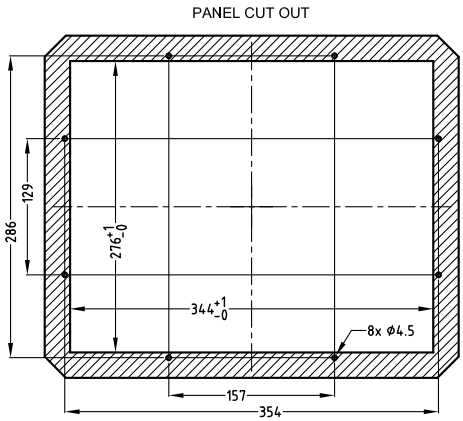

iX Panel Pro T150 C2D

TECHNICAL DATA - iX Panel Pro T150 C2D (for further data, see page 1.22)	
Front panel	
Size in inches	15”
Resolution in pixels	1024 x 768
Coloration	16 million colors TFT
General information	
External dimensions in mm W x H x D	452 x 357 x 136
Panel profile in W x H in mm	429 x 334
Weight	ca. 9 kg
Order information	
Description of item	iX Panel Pro T150 C2D

Dimensional drawings in mm

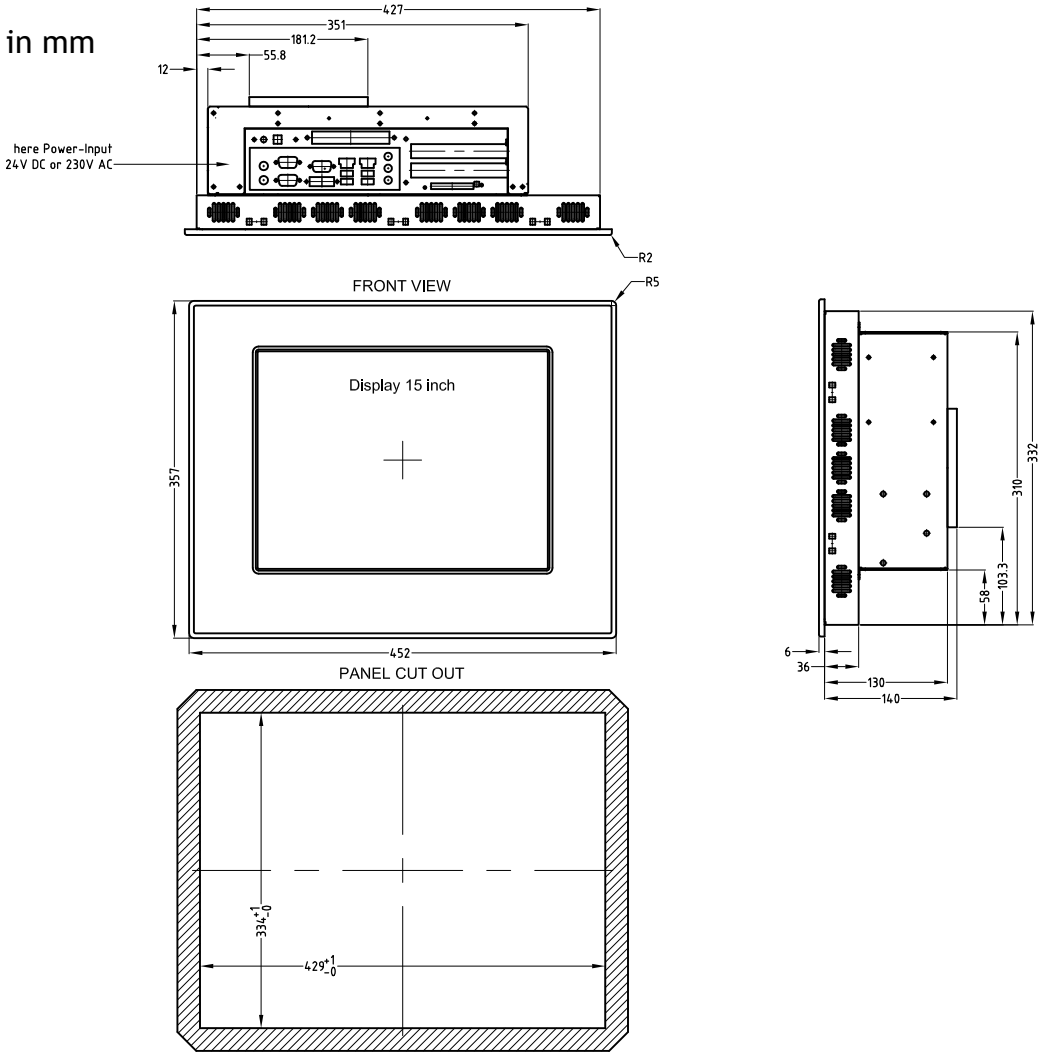

iX Panel Pro T170 C2D

TECHNICAL DATA - iX Panel Pro T170 C2D (for further data, see page 1.22)	
Front panel	
Size in inches	17”
Resolution in pixels	1280 x 1024
Coloration	16 million colors TFT
General information	
External dimensions in mm W x H x D	480 x 377 x 141
Panel profile in W x H in mm	454 x 351
Weight	ca. 10 kg
Order information	
Description of item	iX Panel Pro T170 C2D

Dimensional drawings in mm

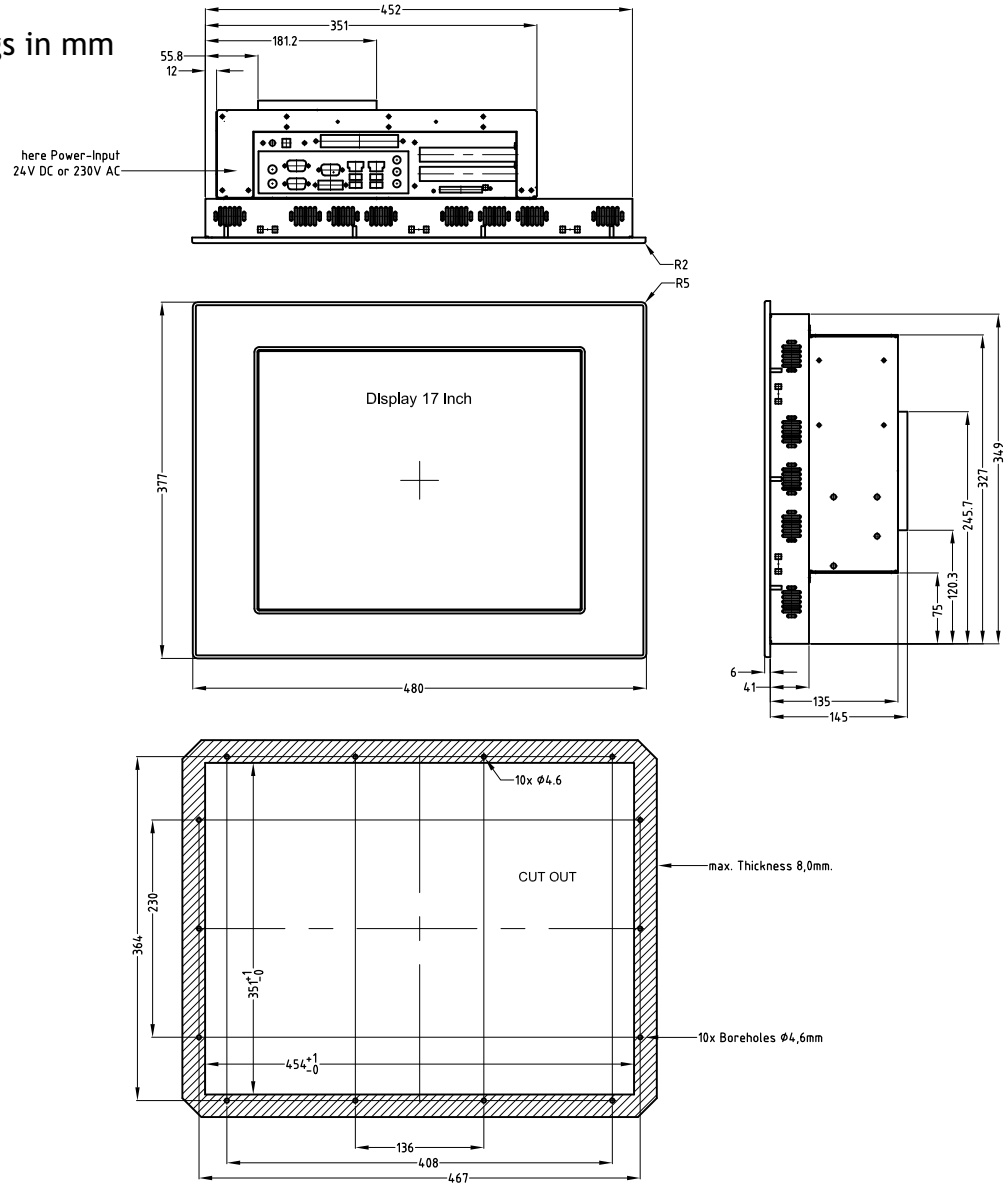

iX Panel Pro T190 C2D

TECHNICAL DATA - iX Panel Pro T190 C2D (for further data, see page 1.22)	
Front panel	
Size in inches	19”
Resolution in pixels	1280 x 1024
Coloration	16 million colors TFT
General information	
External dimensions in mm W x H x D	480 x 377 x 154
Panel profile in W x H in mm	454 x 350
Weight	ca. 11 kg
Order information	
Description of item	iX Panel Pro T190 C2D

Dimensional drawings in mm

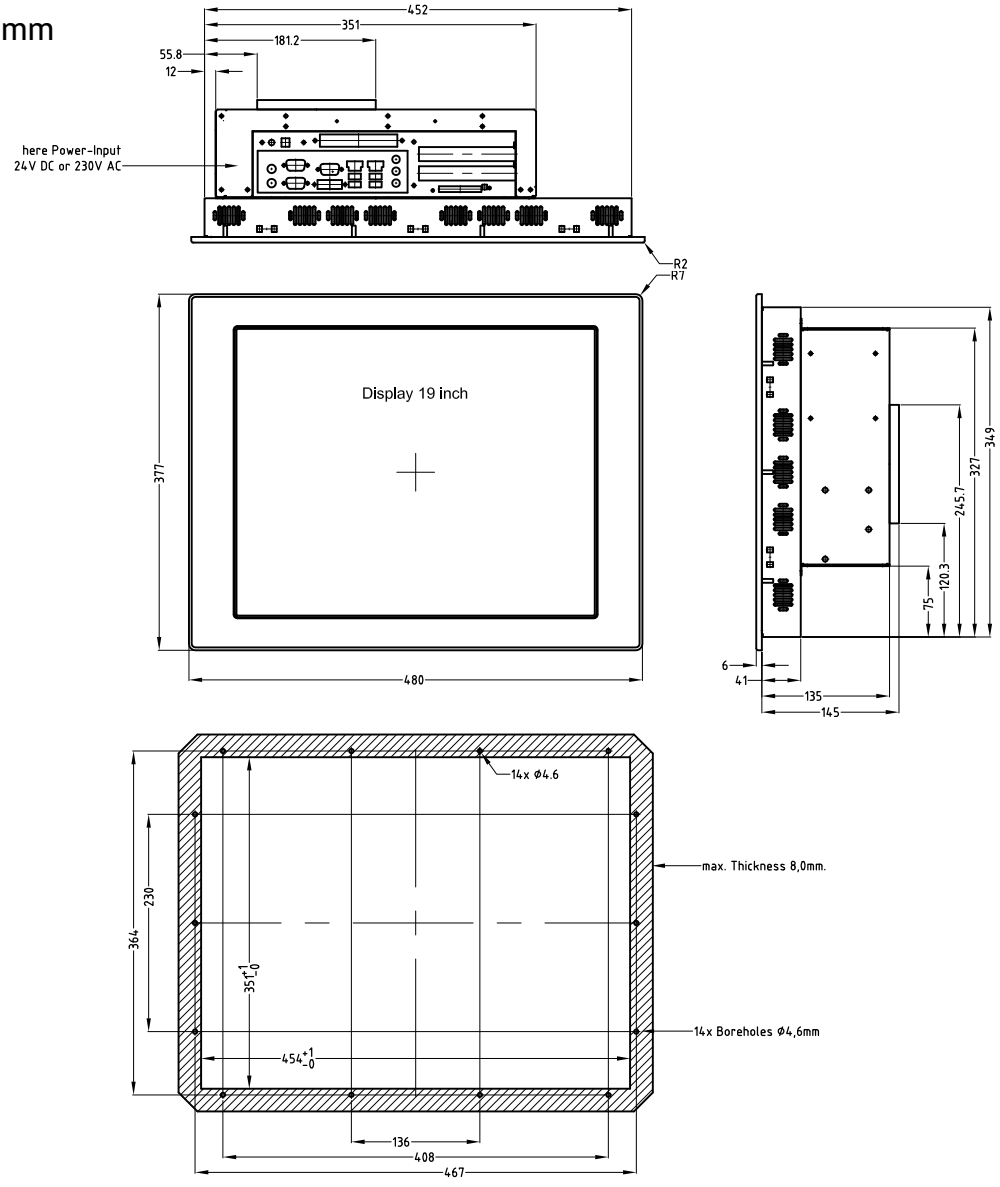

iX Box Pro C2D

TECHNICAL DATA - iX Box Pro C2D (for further data, see page 1.22)	
Panel	
Degree of protection	IP 20 from all sides
General information	
External dimensions in mm W x H x D	389 x 276 x 114
Panel profile in W x H in mm	-
Weight	ca. 3.5 kg
Order information	
Description of item	iX Box Pro C2D

Dimensional drawings in mm

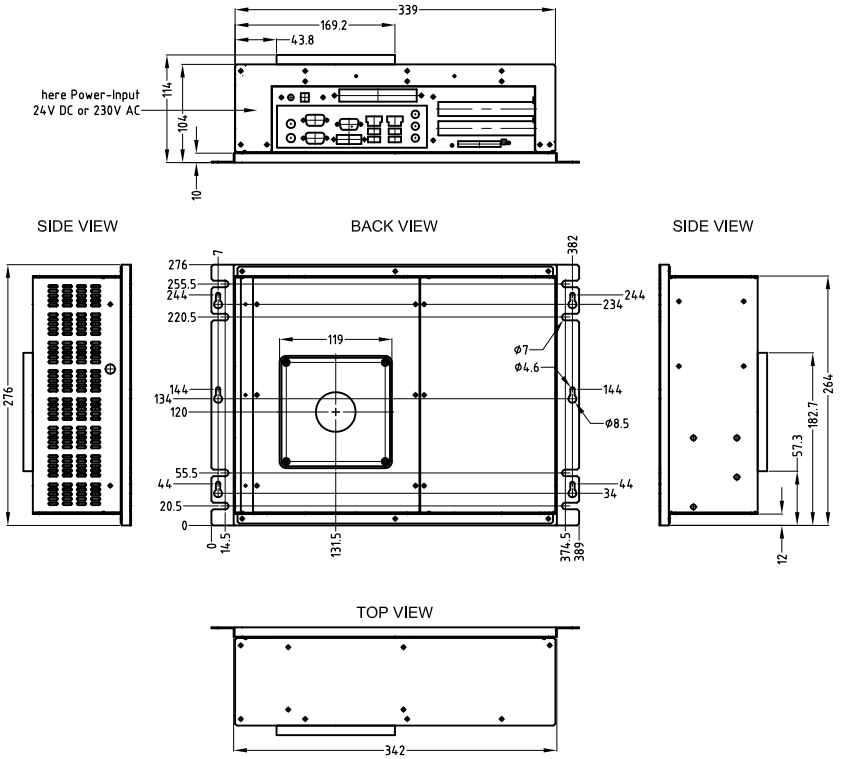

1. To allow for adequate air circulation in the switch cabinet / control panel, there must be an open area of at least 50mm around the PC-backside.

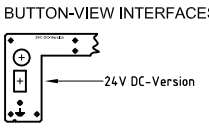

iX Software

TECHNICAL DATA - iX Developer & iX Runtime	
iX Developer	
iX Developer	iX development environment for Windows XP & Vista Single license
iX Runtime	
iX Runtime 250	iX Runtime license with 250 tags limit, with USB dongle
iX Runtime 2000	iX Runtime license with 2000 tags limit, with USB dongle
iX Runtime 4000	iX Runtime license with 4000 tags limit, with USB dongle
iX Runtime upgrade	There is an upgrade to the next version for all iX Runtime licenses.
Training	
iX Basic Training	1 day of training at Beijer Electronics in Unterensingen
iX Advanced Training	1 day of training at Beijer Electronics in Unterensingen, following on from the basic training
iX Project Training	iX individual project training for customer projects
Service	
iX Project Creation	Creation of a customer project according to specific requirements

Industrial PC EPC series - High performance in various specifications

The EPC-series industrial PCs are high-performance computers used for demanding visualization tasks. The product series includes fan-less panel PCs with compact flash cards, standard industrial PCs with mass storage and extension slots, as well as mechanically robust box PCs together with flat screens suitable for industrial applications. With embedded operating systems such as Windows CE, Windows XP emb., Windows emb. Standard or Windows XP Prof. and Windows 7, the industrial computers are equipped to cope with demanding HMI solutions from Beijer Electronics or from third-party software packages.

High flexibility in all environments

The variety on offer ranges from starter computers with AMD LX800 CPU through to energy saving Intel® Atom™ CPU, right down to the high-performance Intel® Core Quad processors. Plenty of options too in terms of display: With sizes ranging from 6 inches (15.2 cm) to 19 inches (48.3 cm), there is a design suitable for almost every application.

With a specially designed aluminum frame and highly available PC components the devices are a valuable addition to the machine, even in the toughest of conditions. Depending on the model series data is entered and the process operated using both keypad and touchscreen.

Summary

High-performance, robust and tailored to suit individual needs: The comprehensive spectrum of panel and box PCs from Beijer Electronics meets the requirements of every user. Check out our product lines and decide for yourself which panel PC best suits your next visualization requirements.

Industrial PC EPC AM

Characteristics

- TFT color display
- Robust industrial design
- High-performance Atom™ CPU
- Low installation depth
- Fan-less systems
- Embedded operating system
- Available display sizes: 7", 10", 15"

TECHNICAL DATA - EPC AM PRODUCT GROUP	
Display	
Type of data entry	Resistive touch
MTBF backlight	> 40,000 hrs
Degree of protection	IP66 / NEMA 4 front-mounted
Voltage supply	
Operating voltage	24 VDC (20 - 30 V)
Power consumption	See detailed description
System	
Processor	Intel® Atom™ Z 530 (1.6 GHz)
Main memory	1,024 MB
External storage medium	SD card slot
Internal mass memory (Flash)	4 GB
Operating system	Windows XP embedded
Interfaces	
Serial	2 x RS232 2 x RS422/485
Ethernet	1 x 10/100/1000 Mbit/s 1 x 10/100 Mbit/s
Keypad / Mouse	USB
USB	1 x USB 2.0
Communications module	MPI, Profibus, CANopen (only in conjunction with the appropriate software)
General information	
Frame material	Aluminum
Foil	Acid-resistant polyester Foil
Operating temperature	0 to 50° C (vertical)
Storage temperature	-20 to 60° C

EPC AM TA70

TECHNICAL DATA - EPC AM TA70 (for further data, see page 2.2)	
Front panel	
Size in inches	6.5”
Resolution in pixels	640 x 480
Coloration	262,000 colors TFT
Voltage supply	
Power consumption	1.5 A
General information	
External dimensions in mm W x H x D	219 x 154 x 61
Panel profile in W x H in mm	189 x 138
Weight	ca. 1.3 kg
Order information	
Description of item	EPC AM TA70

Dimensional drawings in mm

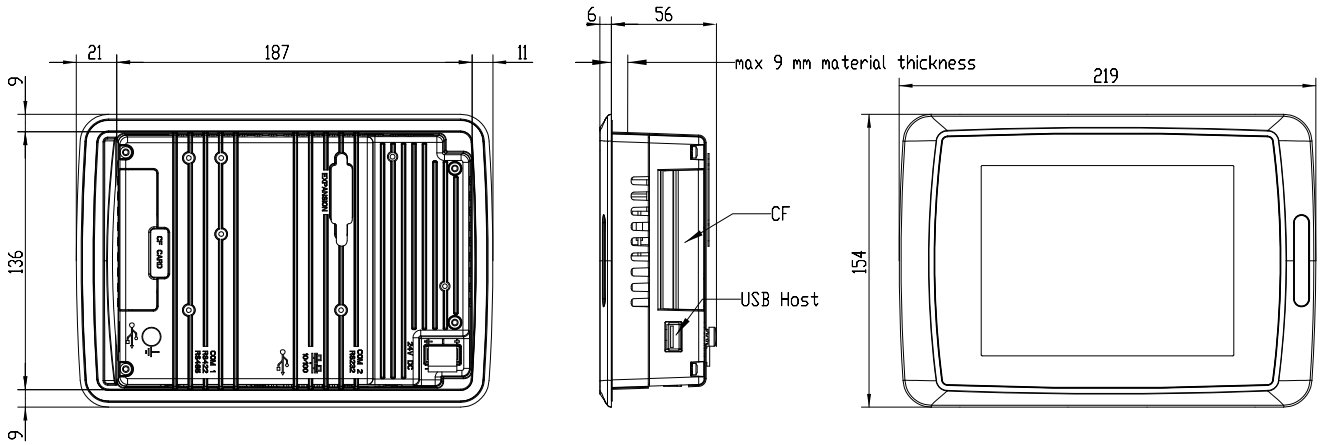

Cut out
188.5±1 x 137.5±1 mm
(7.42±0.04 x 5.41±0.04 inch)

EPC AM TA100

TECHNICAL DATA - EPC AM TA100 (for further data, see page 2.2)	
Front panel	
Size in inches	10.4”
Resolution in pixels	800 x 600
Coloration	262,000 colors TFT
Voltage supply	
Power consumption	1.7 A
General information	
External dimensions in mm W x H x D	302 x 228 x 64
Panel profile in W x H in mm	265 x 206
Weight	ca. 2.5 kg
Order information	
Description of item	EPC AM TA100

Dimensional drawings in mm

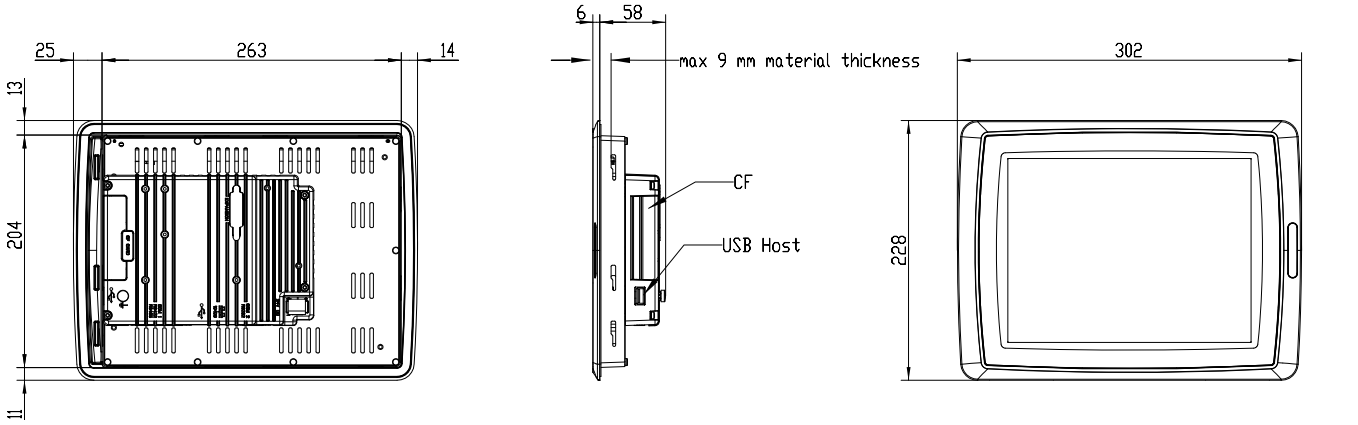

Cut out
264.5±1 x 206±1 mm
(10.4±0.04 x 8.1±0.04 inch)

EPC AM TA150

TECHNICAL DATA - EPC AM TA150 (for further data, see page 2.2)	
Front panel	
Size in inches	15"
Resolution in pixels	1024 x 768
Coloration	16 million colors TFT
Voltage supply	
Power consumption	2.2 A
General information	
External dimensions in mm W x H x D	398 x 304 x 66
Panel profile in W x H in mm	356 x 279
Weight	ca. 4 kg
Order information	
Description of item	EPC AM TA150

Dimensional drawings in mm

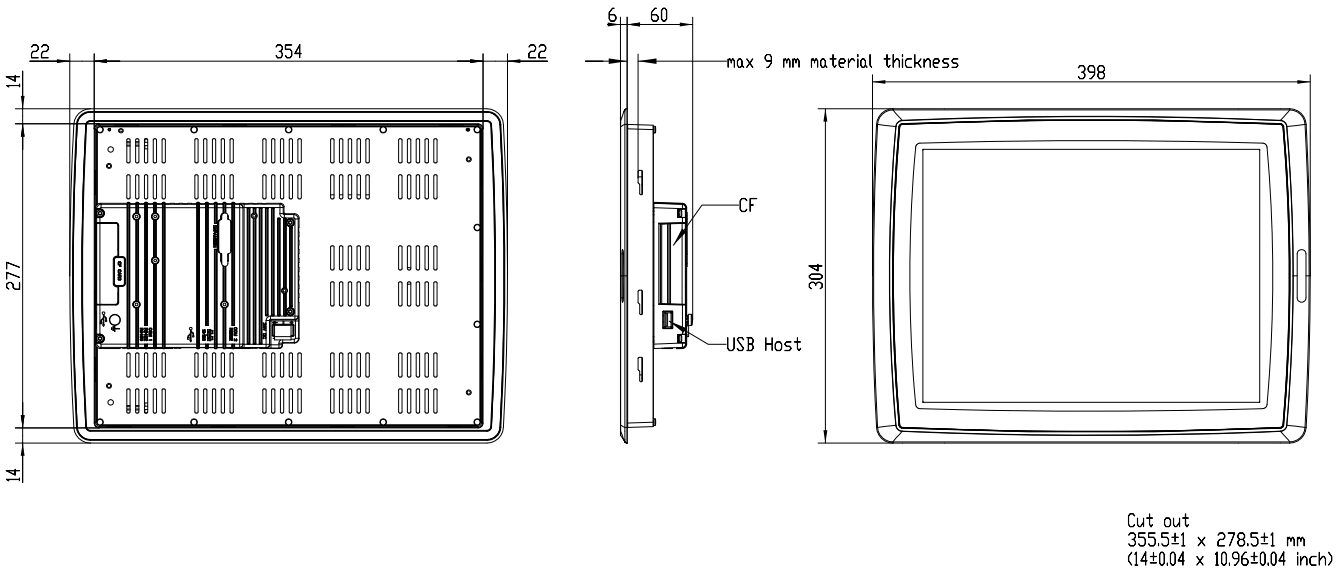

Industrial PC EPC LX

Characteristics

- TFT color display
- Resistive touch
- Fully passively cooled
- Noiseless
- Compact design
- Robust industrial design
- CFC & embedded operating system available
- Available sizes: 7", 8", 10", 12", 15"

TECHNICAL DATA - EPC LX PRODUCT GROUP	
Front panel	
Type of data entry	Resistive touch
MTBF backlight	> 40,000 hrs
Degree of protection	IP 65 front-mounted
Power supply	
Operating voltage	24 VDC +/- 20%
Power consumption	ca. 0.7 - 1.0 A
System	
Processor	AMD LX 800
Main memory	256 / 1,024 MB
External storage medium (CFC)	2 - 8 GB
Internal mass memory (CFC)	2 - 8 GB
Operating system	Windows CE.NET, Windows XP embedded
Interfaces	
Serial	RS232
Ethernet	2 x 10/100 Mbit/s
Keypad / Mouse	1 x PS/2
Monitor	VGA
USB	2 x USB 2.0
Slots	PC 104
Communications module	MPI, Profibus, CANopen (only in conjunction with the appropriate software)
General information	
Frame material	Aluminum
Foil	Acid-resistant polyester Foil
Operating temperature	0 to 50° C
Storage temperature	-20 to 60° C

EPC T70 LX

TECHNICAL DATA - EPC T70 LX (for further data, see page 2.6)	
Front panel	
Size in inches	6.4”
Resolution in pixels	640 x 480
Coloration	262,000 colors TFT
General information	
External dimensions in mm W x H x D	211 x 156 x 57
Panel profile in W x H in mm	197 x 142
Weight	ca. 1.2 kg
Order information	
Description of item	EPC T70 LX

Dimensional drawings in mm

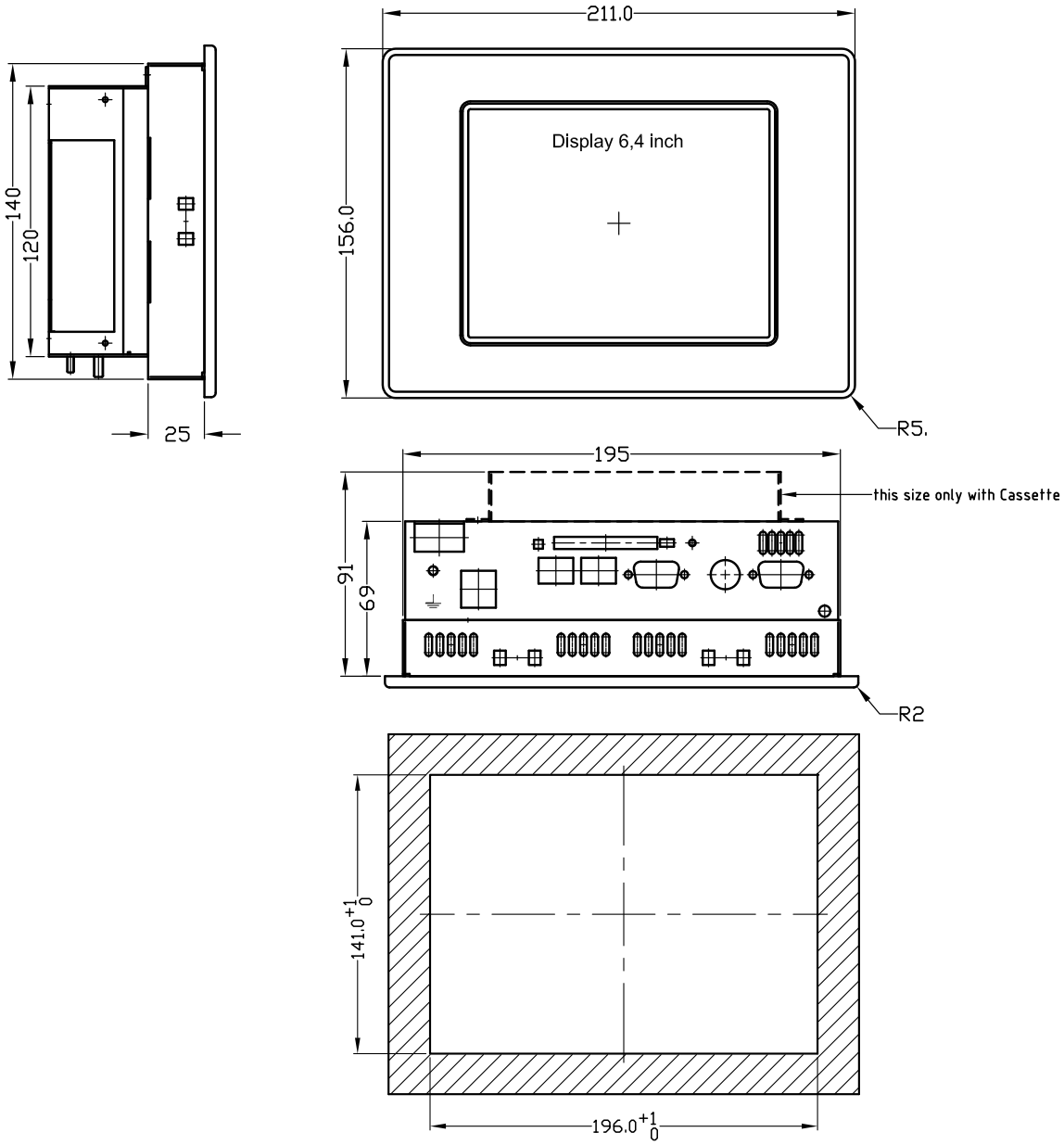

EPC T80 LX

TECHNICAL DATA - EPC T80 LX (for further data, see page 2.6)	
Front panel	
Size in inches	8.4”
Resolution in pixels	640 x 480
Coloration	262,000 colors TFT
General information	
External dimensions in mm W x H x D	252 x 190 x 73
Panel profile in W x H in mm	232 x 170
Weight	ca. 1.9 kg
Order information	
Description of item	EPC T80 LX

Dimensional drawings in mm

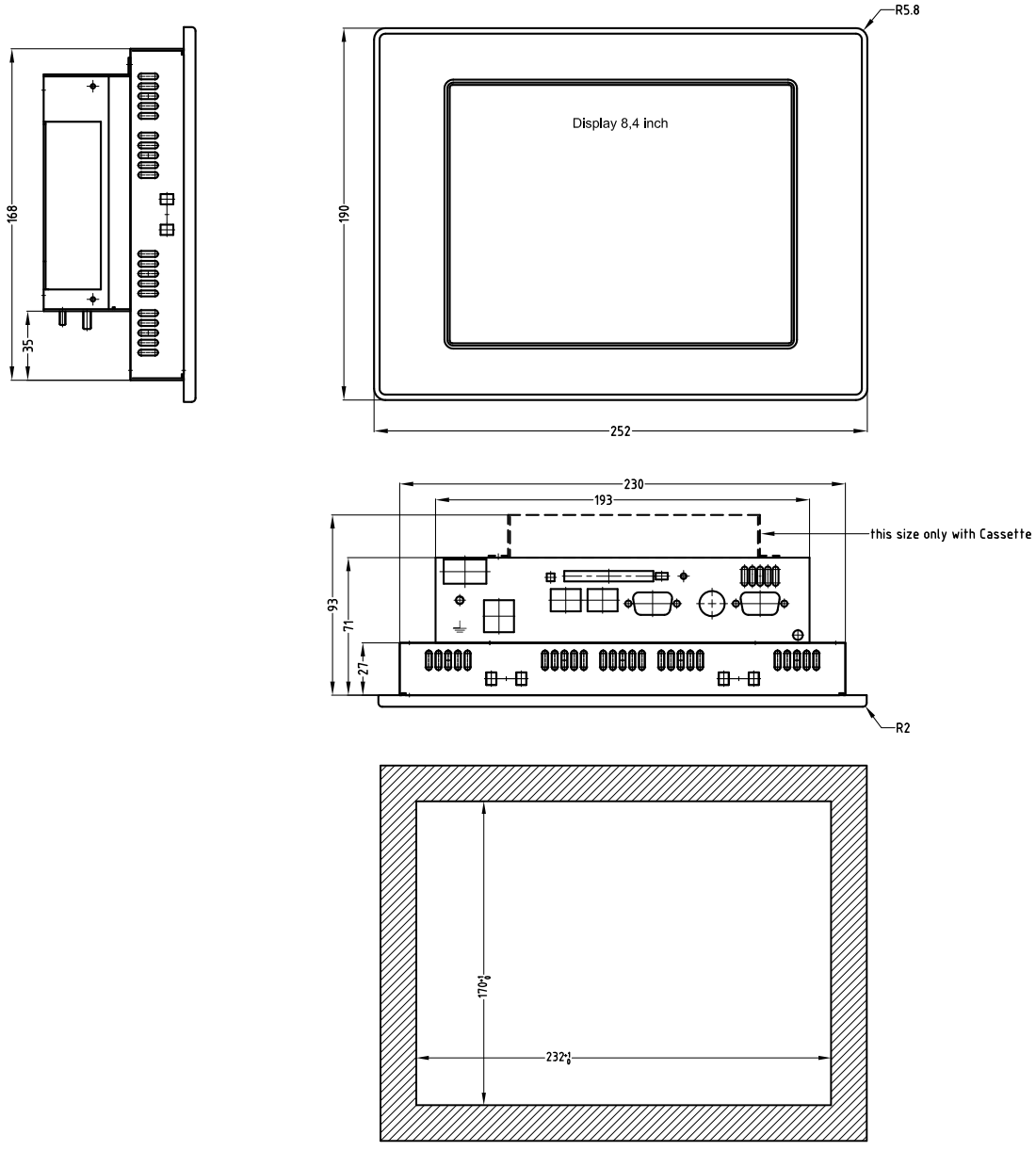

EPC T100 LX

TECHNICAL DATA - EPC T100 LX (for further data, see page 2.6)	
Front panel	
Size in inches	10.4"
Resolution in pixels	800 x 600
Coloration	262,000 colors TFT
General information	
External dimensions in mm W x H x D	318 x 244 x 68
Panel profile in W x H in mm	303 x 229
Weight	ca. 2.8 kg
Order information	
Description of item	EPC T100 LX

Dimensional drawings in mm

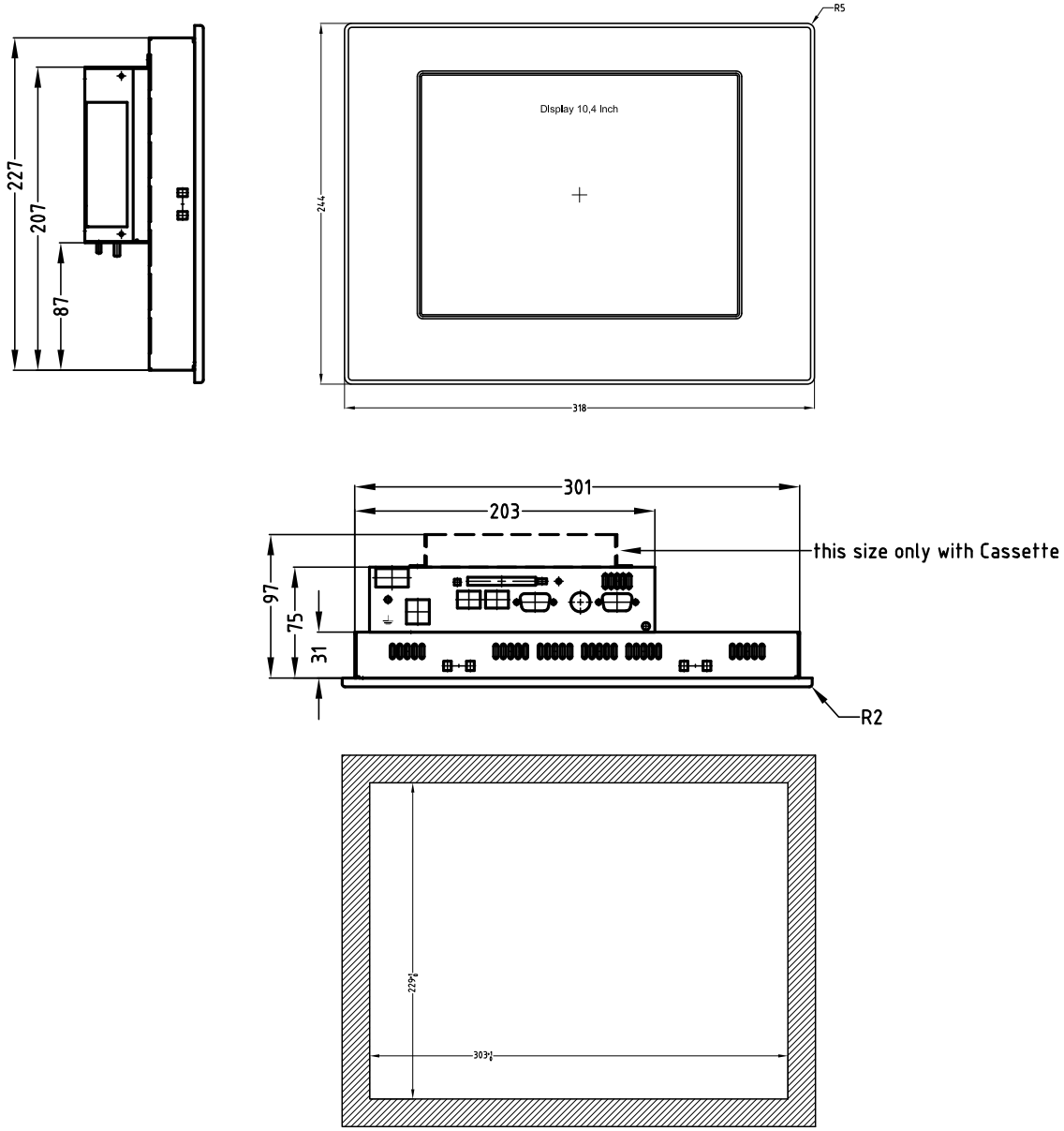

EPC T120 LX

TECHNICAL DATA - EPC T120 LX (for further data, see page 2.6)	
Front panel	
Size in inches	12.1”
Resolution in pixels	800 x 600
Coloration	262,000 colors TFT
General information	
External dimensions in mm W x H x D	364 x 296 x 67
Panel profile in W x H in mm	344 x 276
Weight	ca. 3.0 kg
Order information	
Description of item	EPC T120 LX

Dimensional drawings in mm

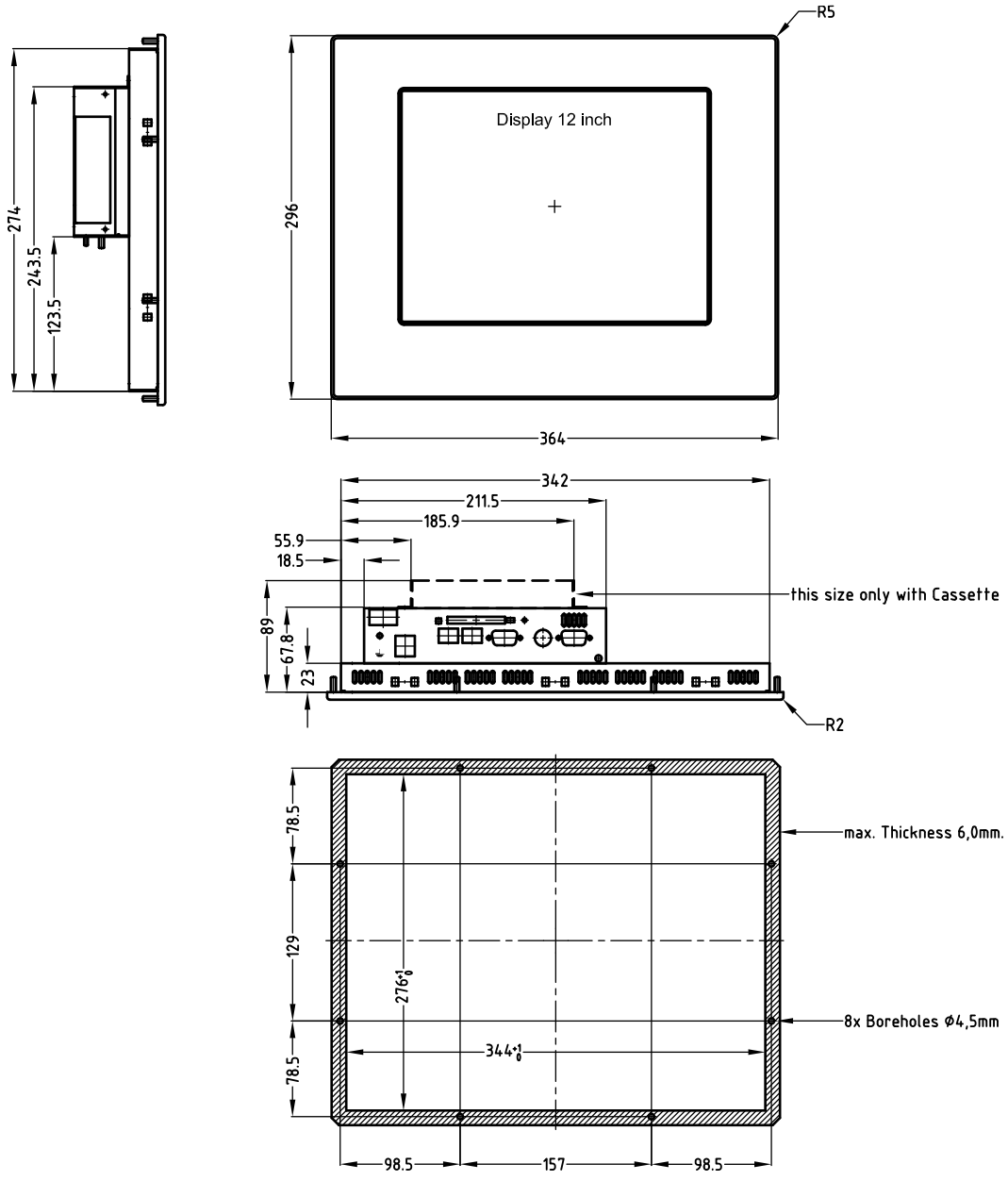

EPC T150 LX

TECHNICAL DATA - EPC T150 LX (for further data, see page 2.6)	
Front panel	
Size in inches	15”
Resolution in pixels	1024 x 768
Coloration	16 million colors TFT
General information	
External dimensions in mm W x H x D	452 x 357 x 68
Panel profile in W x H in mm	429 x 334
Weight	ca. 5.0 kg
Order information	
Description of item	EPC T150 LX

Dimensional drawings in mm

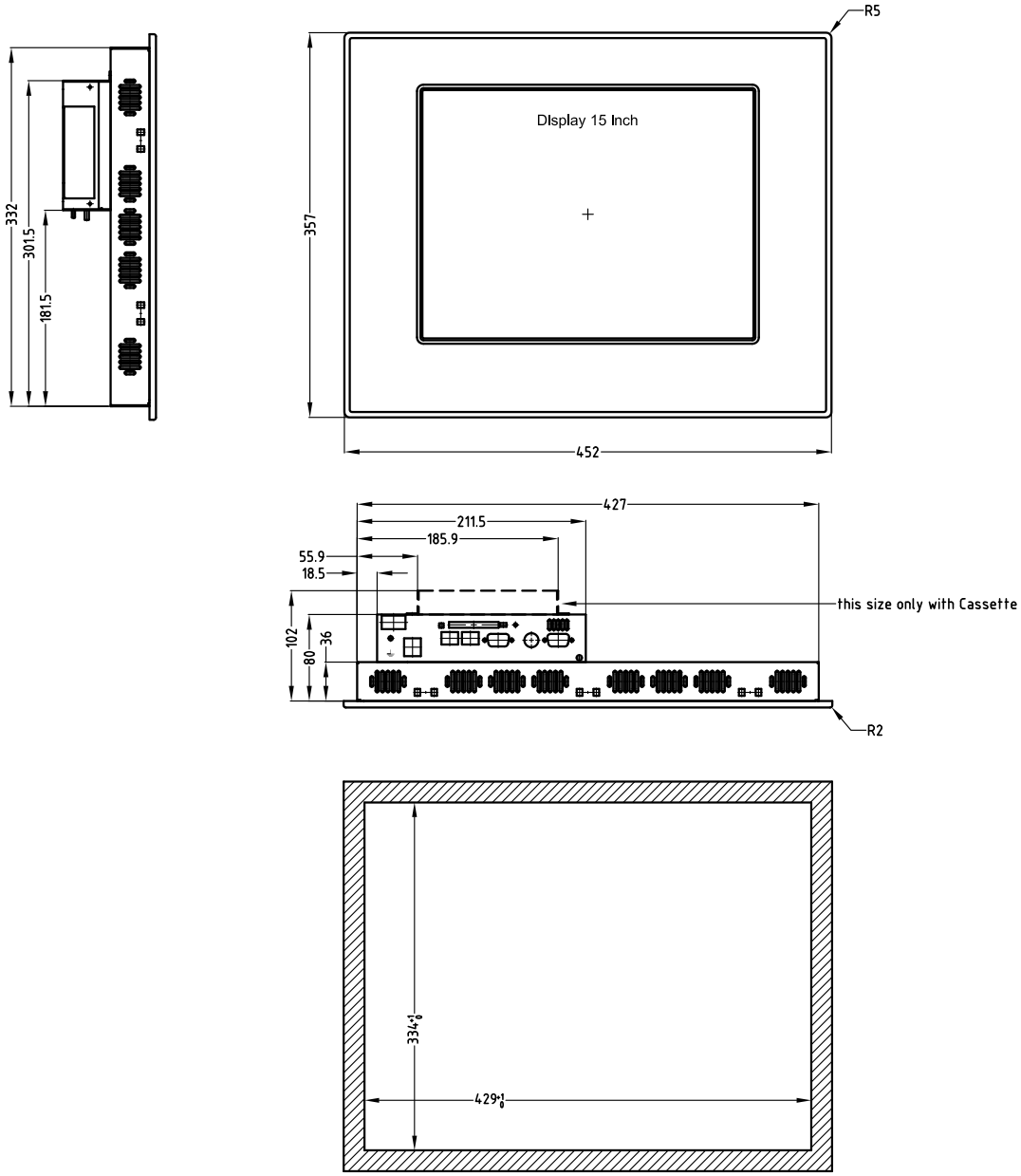

Industrial PC EPC C2D

Characteristics

- Resistive touch
- Core™2Duo
- Front USB (optional)
- Robust industrial design
- PCI extension slots
- 24 VDC operating voltage or 230 VAC internal
- Embedded operating systems
- Available sizes: 12", 15", 17", 19"

TECHNICAL DATA - EPC C2D PRODUCT GROUP	
Front panel	
Type of data entry	Resistive touch
MTBF backlight	> 40,000 hrs
Degree of protection	IP 65 front-mounted
Power supply	
Operating voltage	24 VDC +/- 20% or 115-230 +/- 15% VAC
Power consumption	ca. 4.0 / 1.0 A
System	
Processor	Intel® Core2Duo 2.2 GHz / Celeron > 1.6 GHz
Main memory	1 GB / 2 GB / 4 GB
External storage medium (CFC)	2 - 8 GB
Internal mass memory (CFC/HDD)	2 - 8 GB / HDD automotive 80 GB / SSD 64-128 GB
Operating system	Windows XP Professional, Windows XP embedded, Windows 7*
Interfaces	
Serial	2x RS232
Ethernet	2 x 10/100/1000 Mbit/s
Keypad / Mouse	2 x PS/2
Monitor	VGA + DVI-I
USB	4 x USB 2.0 Front USB (optional)
Slots	2 x PCI (max. 220 mm long)
Communications module	MPI, Profibus, CANopen (only in conjunction with the appropriate software)
General information	
Frame material	Aluminum
Foil	Acid-resistant polyester Foil

*in progress

EPC T120 C2D

TECHNICAL DATA - EPC T120 C2D (for further data, see page 2.12)	
Front panel	
Size in inches	12.1”
Resolution in pixels	800 x 600
Coloration	16 million colors TFT
General information	
External dimensions in mm W x H x D	364 x 296 x 133
Panel profile in W x H in mm	345 x 277
Weight	ca. 7 kg
Order information	
Description of item	EPC T120 C2D

Dimensional drawings in mm

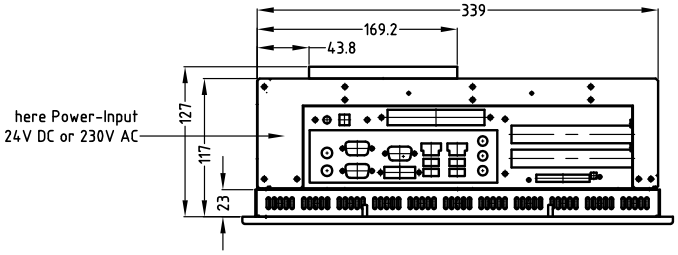

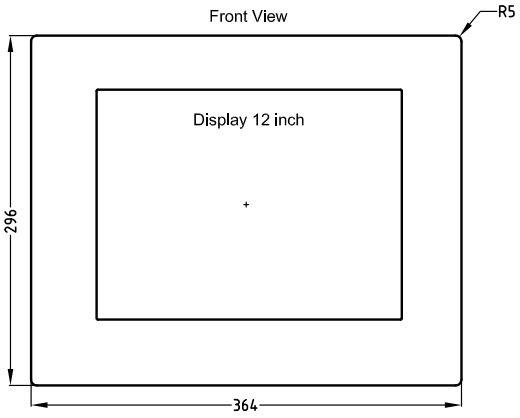

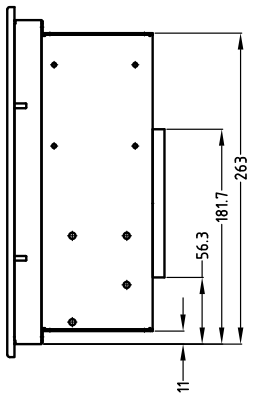

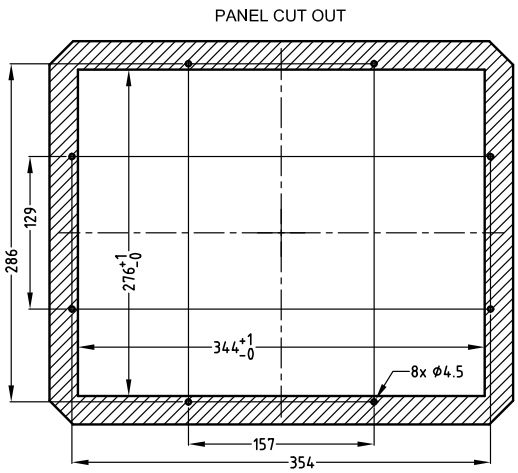

EPC T150 C2D

TECHNICAL DATA - EPC T150 C2D (for further data, see page 2.12)	
Front panel	
Size in inches	15”
Resolution in pixels	1024 x 768
Coloration	16 million colors TFT
General information	
External dimensions in mm W x H x D	452 x 357 x 136
Panel profile in W x H in mm	429 x 334
Weight	ca. 9 kg
Order information	
Description of item	EPC T150 C2D

Dimensional drawings in mm

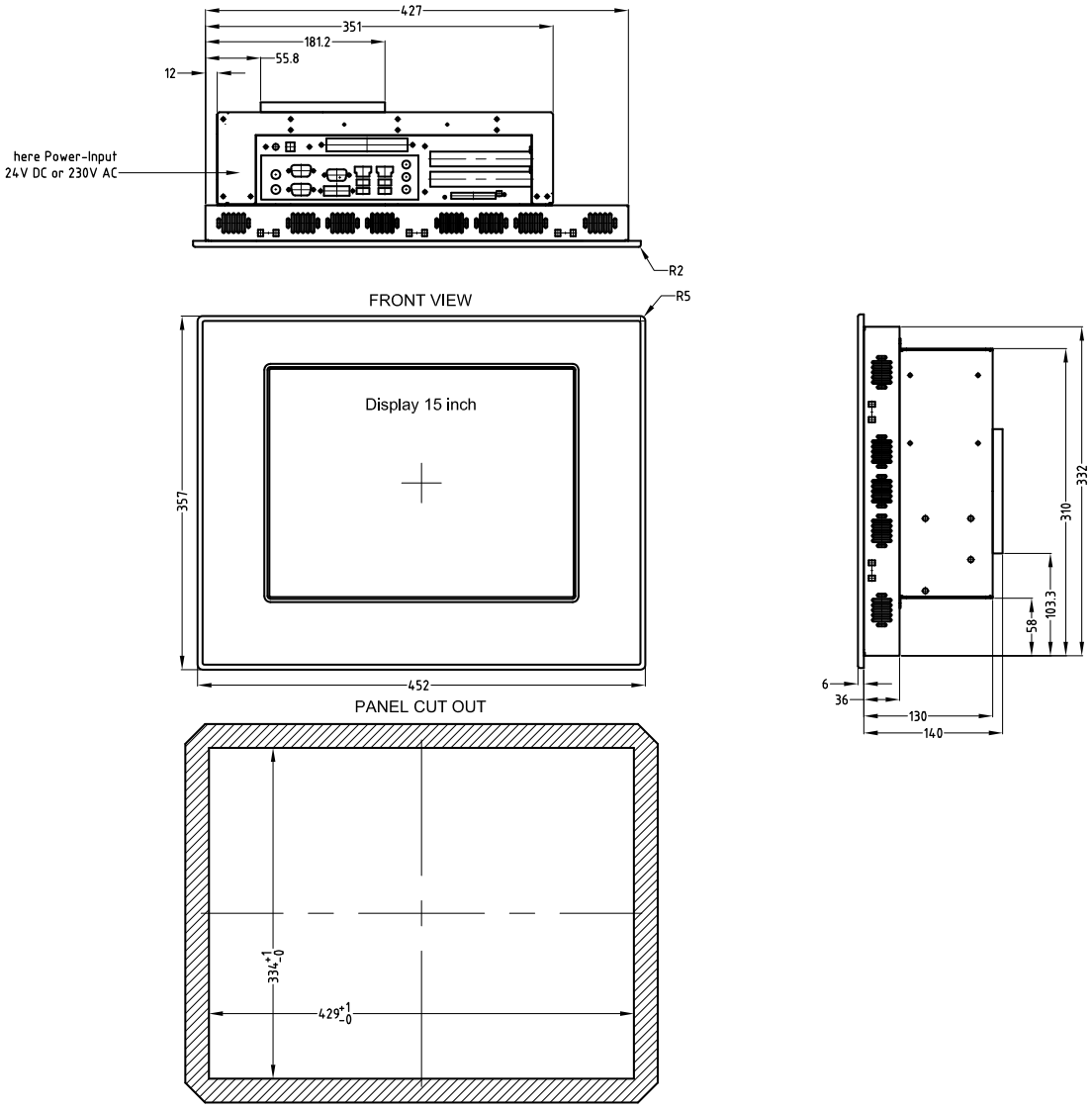

EPC T170 C2D

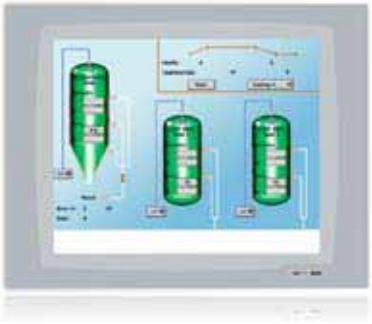

TECHNICAL DATA - EPC T170 C2D (for further data, see page 2.12)	
Front panel	
Size in inches	17”
Resolution in pixels	1280 x 1024
Coloration	16 million colors TFT
General information	
External dimensions in mm W x H x D	480 x 377 x 141
Panel profile in W x H in mm	454 x 351
Weight	ca. 10 kg
Order information	
Description of item	EPC T170 C2D

Dimensional drawings in mm

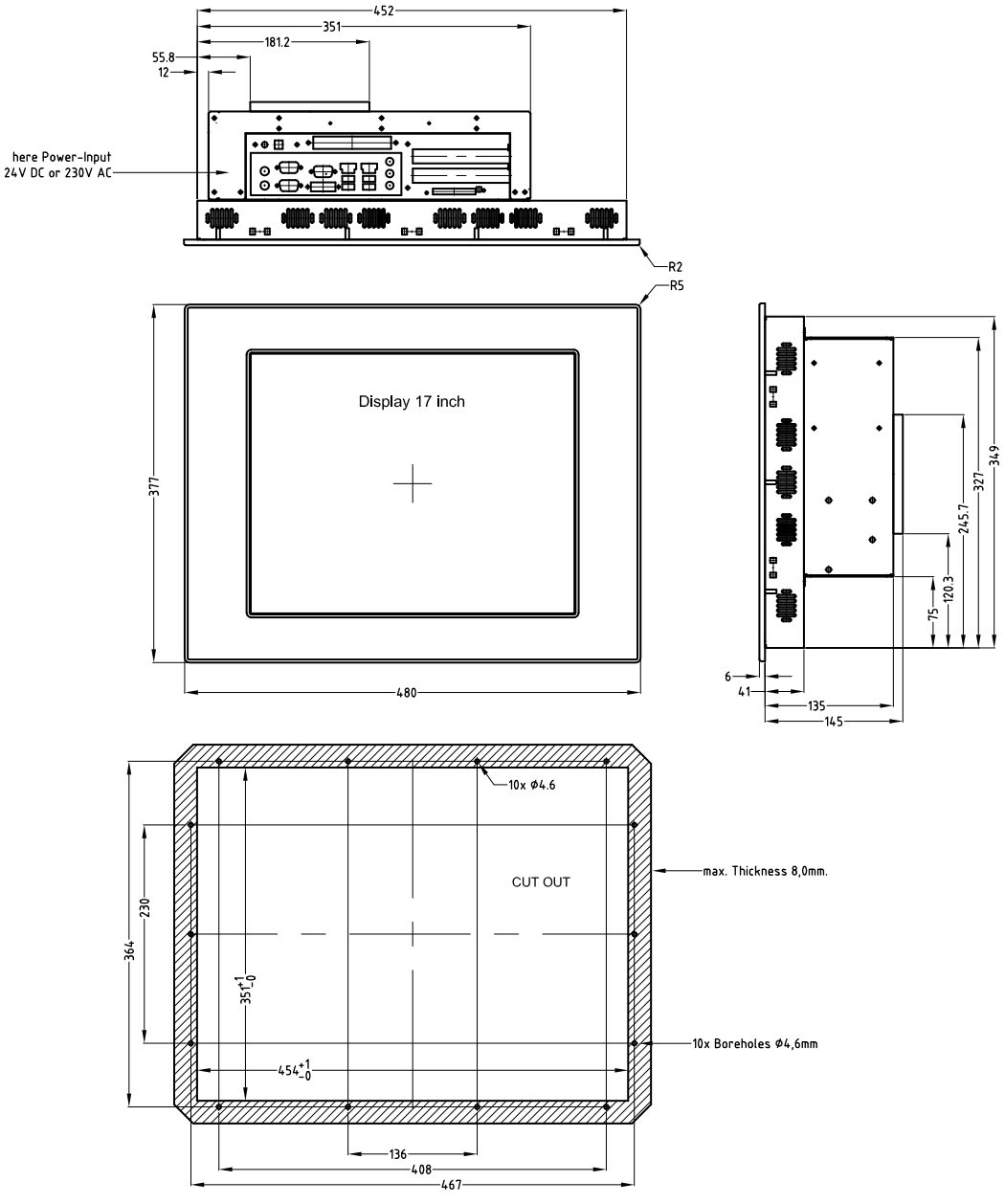

EPC T190 C2D

TECHNICAL DATA - EPC T190 C2D (for further data, see page 2.12)	
Front panel	
Size in inches	19”
Resolution in pixels	1280 x 1024
Coloration	16 million colors TFT
General information	
External dimensions in mm W x H x D	480 x 377 x 154
Panel profile in W x H in mm	454 x 350
Weight	ca. 11 kg
Order information	
Description of item	EPC T190 C2D

Dimensional drawings in mm

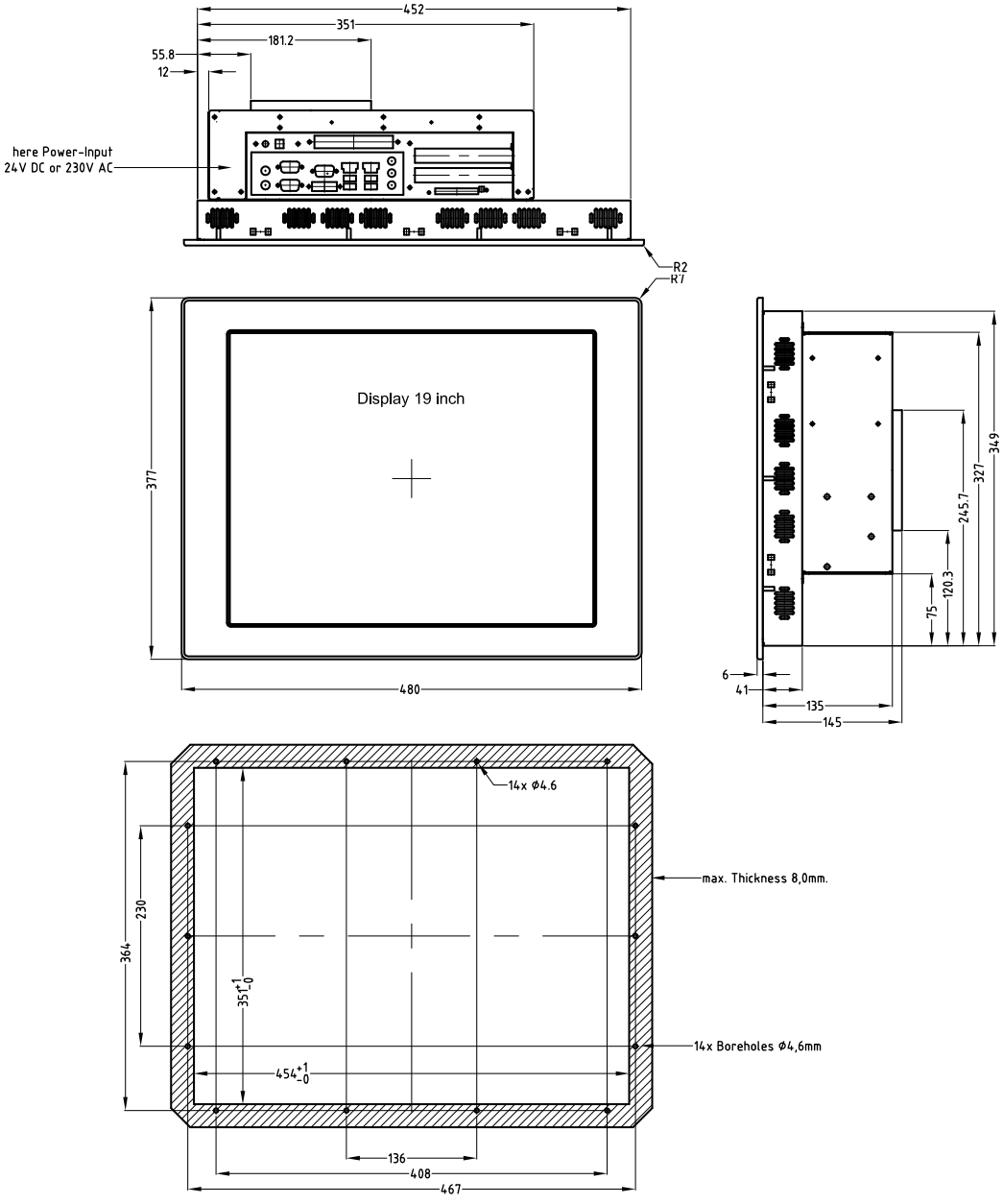

EPC Box C2D

TECHNICAL DATA - EPC C2D Box (for further data, see page 2.12)	
Panel	
Degree of protection	IP 20 from all sides
General information	
External dimensions in mm W x H x D	389 x 276 x 114
Panel profile in W x H in mm	-
Weight	ca. 3.5 kg
Order information	
Description of item	EPC Box C2D

Dimensional drawings in mm

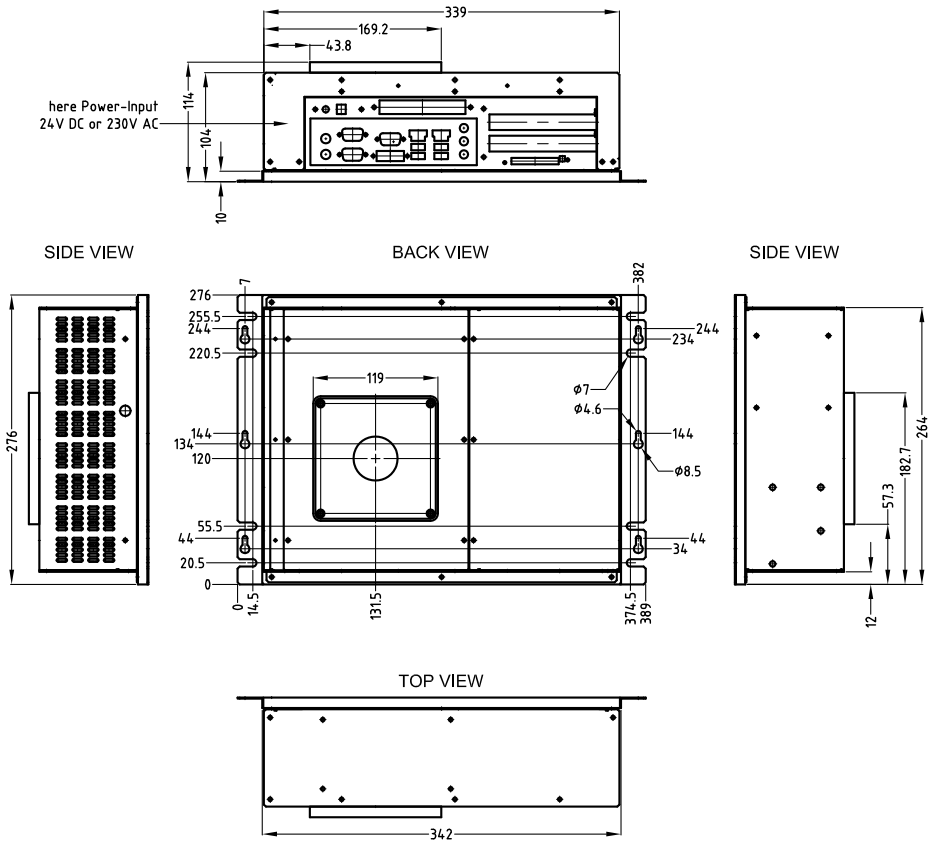

1. To allow for adequate air circulation in the switch cabinet / control panel, there must be an open area of at least 50mm around the PC-backside.

BUTTON-VIEW INTERFACES

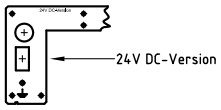

Industrial PC EPCe

Characteristics

- Open PC architecture
- Scalable processor performance up to Intel® Core Quad
- Large number of ports
- PCI extension slots
- RAID mass memory
- DVD-RW internal
- Form factor of previous models
- Available display sizes: 15" and 17"

TECHNICAL DATA - EPCe PRODUCT GROUP	
Front panel	
Type of data entry	Resistive touch
MTBF backlight	> 40,000 hrs
Degree of protection	IP 65 (front) / IP 20 (back)
Power supply	
Operating voltage	115 - 230 VAC +/- 15%
Power consumption	ca. 1.0 A
System	
Processor	Intel® Core 2 Quad / Intel® Core 2 Duo / Intel® Core Solo
System chipset	Intel® Q35 Express
Main memory	1 - 8 GB
Internal mass memory(HDD)	3.5" or 2.5" on removable carrier / Raid 1
Drive (optional)	DVD-RW
Operating system	Windows XP, Win 2000
Interfaces	
Serial	2 x RS232
Printer	LPT
Ethernet	2 x 10/100/1000 Mbit/s
Keypad / Mouse	2 x PS/2
Monitor	VGA / DVI
Slots	5 x PCI
USB	6 x USB 2.0
General information	
Frame material	Aluminum
Foil	Acid-resistant polyester Foil
Operating temperature	0 to 45° C
Storage temperature	-20 to 60° C

EPCe T150

TECHNICAL DATA - EPCe T150 (for further data, see page 2.18)	
Front panel	
Size in inches	15”
Resolution in pixels	1024 x 768
Coloration	16 million colors TFT
Light intensity (typical)	250 cd/m²
General information	
External dimensions in mm W x H x D	452 x 357 x 242
Weight	ca. 12.0 kg
Order information	
Description of item	EPCe T150

Dimensional drawings in mm

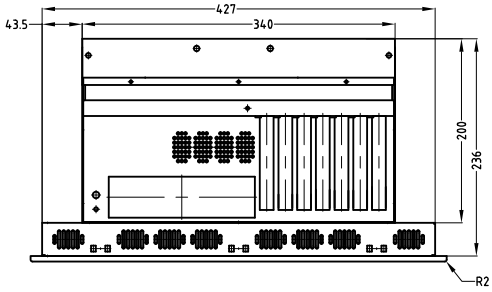

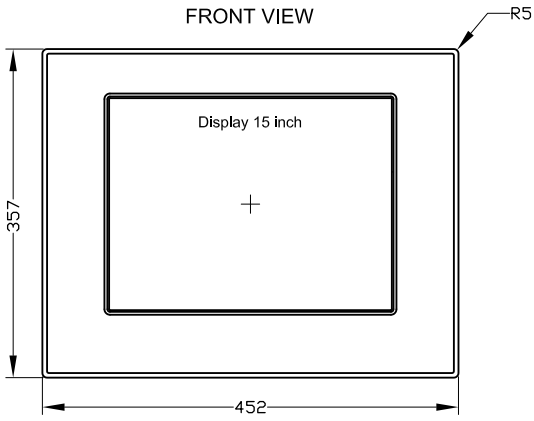

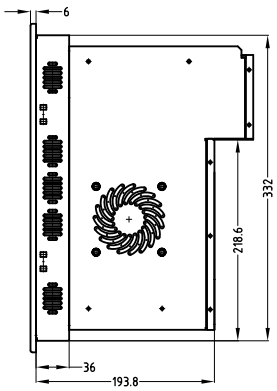

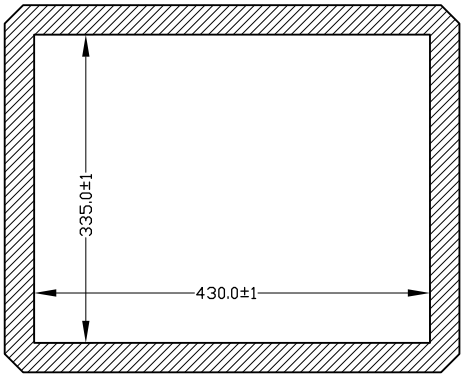

EPCe T170

TECHNICAL DATA - EPCe T170 (for further data, see page 2.18)	
Front panel	
Size in inches	17”
Resolution in pixels	1280 x 1024
Coloration	16 million colors TFT
Light intensity (typical)	250 cd/m²
General information	
Panel profile in W x H in mm	480 x 377 x 246
Weight	ca. 13.5 kg
Order information	
Description of item	EPCe T170

Dimensional drawings in mm

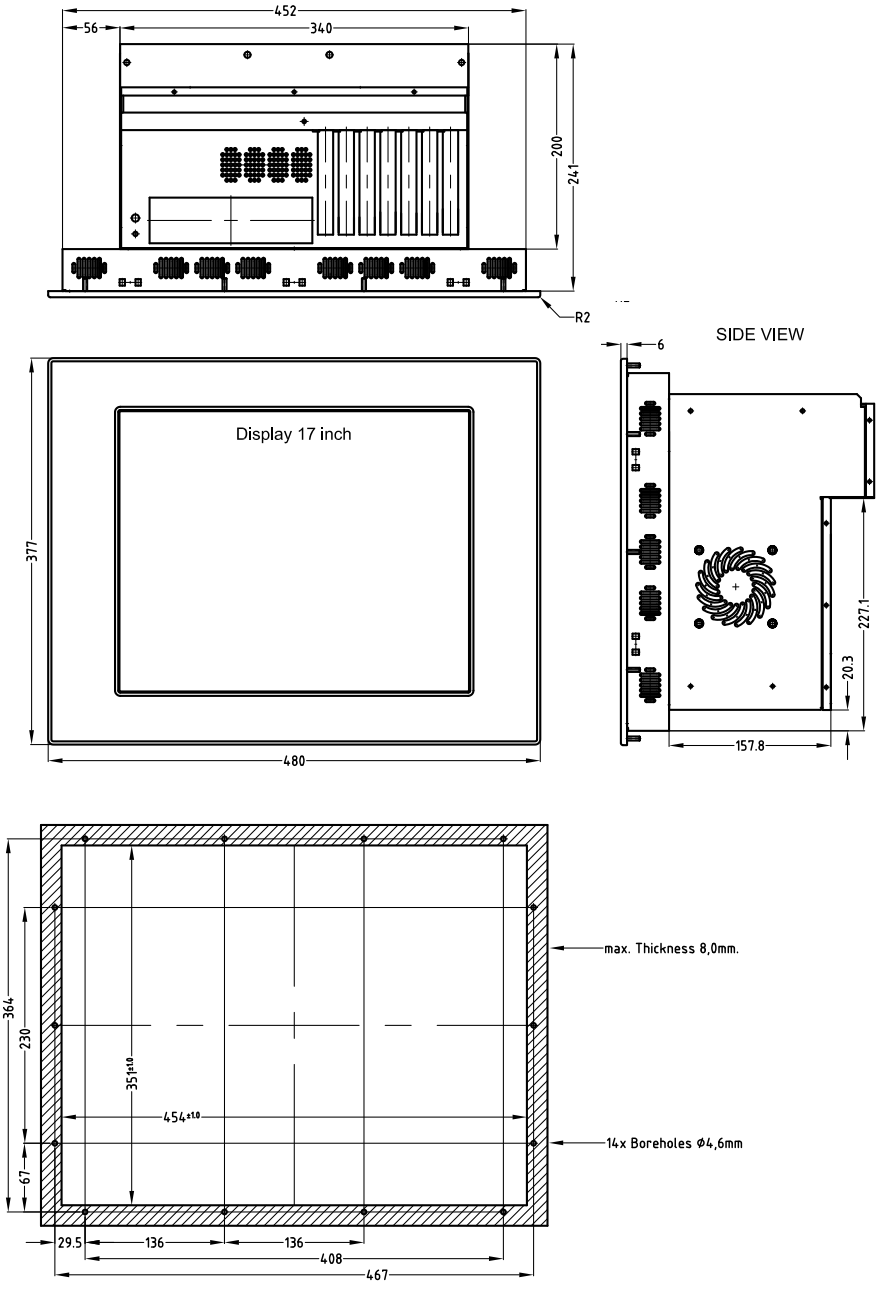

EPCe Box

TECHNICAL DATA - EPCe Box (for further data, see page 2.18)	
Panel	
Degree of protection	IP 20 from all sides
General information	
Panel profile in W x H in mm	370 x 308.2 x 218
Weight	ca. 8.5 kg
Order information	
Description of item	EPCe Box

Dimensional drawings in mm

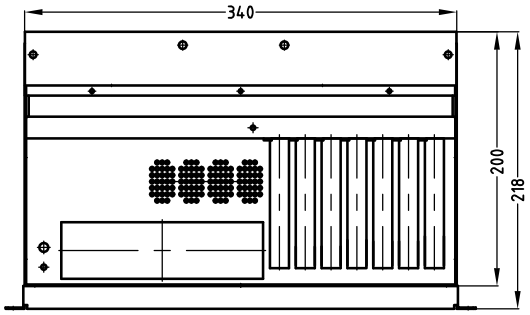

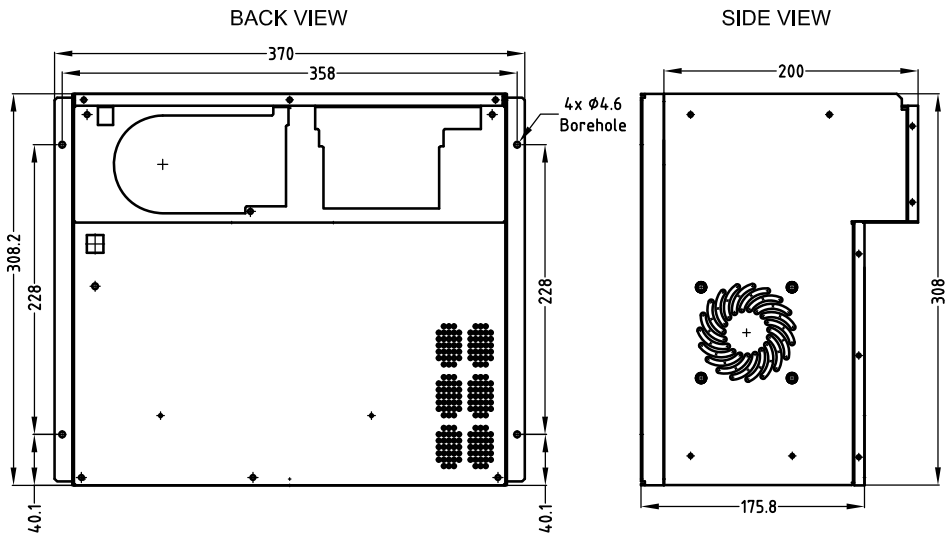

MT series industrial monitors - Flat design and brilliant display

The flat screen monitors from the MT series are used in many applications, from standalone through to remote access systems. Together with a box PC from Beijer Electronics (see page 2.17 or 2.21) or a third-party supplier the monitors are used depending on design as an input and display medium in industrial processes. Typical applications are machine visualization on site, as well as all production and control processes that require clearly arranged user interfaces.

Optimized for industrial use

The robust monitors meet the same high industrial requirements as the panel PCs from Beijer Electronics. The MT series devices have a resistive touchscreen interface and are optimized for use in the industrial environment. Thanks to their low installation depth, they are suitable for both installation in control cabinets and operator consoles. With displays from 12 to 19 inches, the most frequent process applications are optimally covered.

Image transmission to the PC takes place via the VGA or DVI interface. An industrial 24 VDC voltage supply means the touchscreen monitors are universally applicable. There is thus no need for separate power supplies in the control cabinet; a voltage source already available can be used.

Industrial MT monitors

Characteristics

- TFT color display
- Resistive touchscreen interface
- Video transmission via VGA + DVI
- Low installation depth
- Suitable for control cabinet and operator panel
- Front USB (optional)
- Available sizes: 12", 15", 19"

TECHNICAL DATA - MT PRODUCT GROUP	
Front panel	
Type of data entry	Resistive touch
MTBF backlight	> 40,000 hrs
Degree of protection	IP 65 front-mounted
Power supply	
Operating voltage	24 VDC +/- 15%
Power consumption	See detailed description
Interfaces	
Serial	-
Ethernet	-
USB	Front USB (optional) - See detailed description
Graphics	VGA + DVI (depending on model)
Input	Touch via USB
General information	
Frame material	Aluminum
Foil	Acid-resistant polyester Foil
Operating temperature	0 to 45° C
Storage temperature	-20 to 60° C

MT T120

TECHNICAL DATA - MT T120 (for further data, see page 3.2)	
Front panel	
Size in inches	12”
Resolution in pixels	800 x 600
Coloration	256,000 colors TFT
Power supply	
Power consumption	max. 2.5 A
General information	
External dimensions in mm W x H x D	364 x 296 x 64
Panel profile in W x H in mm	345 x 277
Weight	ca. 5.5 kg
Order information	
Description of item	MT T120

Dimensional drawings in mm

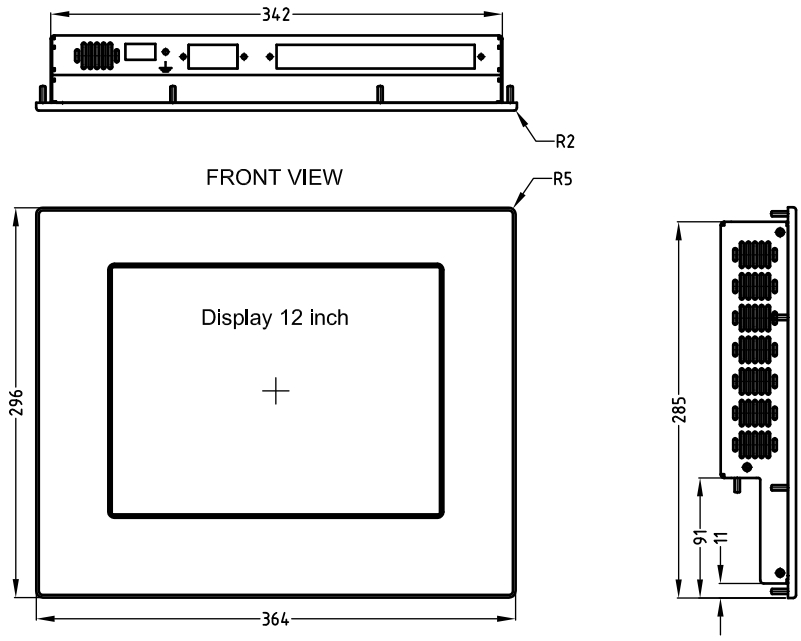

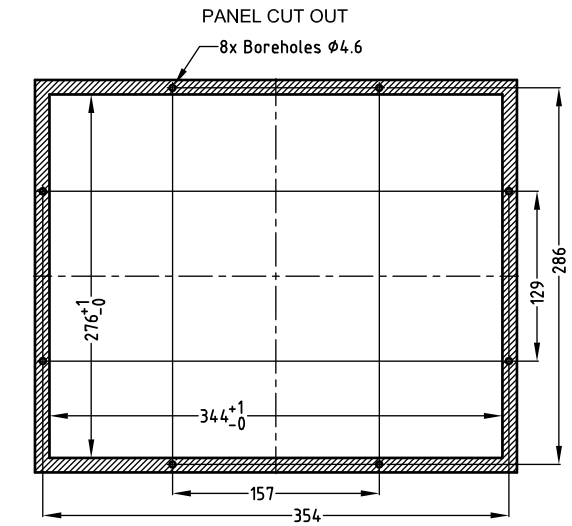

MT T150

TECHNICAL DATA - MT T150 (for further data, see page 3.2)	
Front panel	
Size in inches	15"
Resolution in pixels	1024 x 768
Coloration	16 million colors TFT
Power supply	
Power consumption	max. 2.5 A
Interfaces	
USB	Front USB (optional)
General information	
External dimensions in mm W x H x D	452 x 357 x 51
Panel profile in W x H in mm	430 x 335
Weight	ca. 6.0 kg
Order information	
Description of item	MT T150

Dimensional drawings in mm

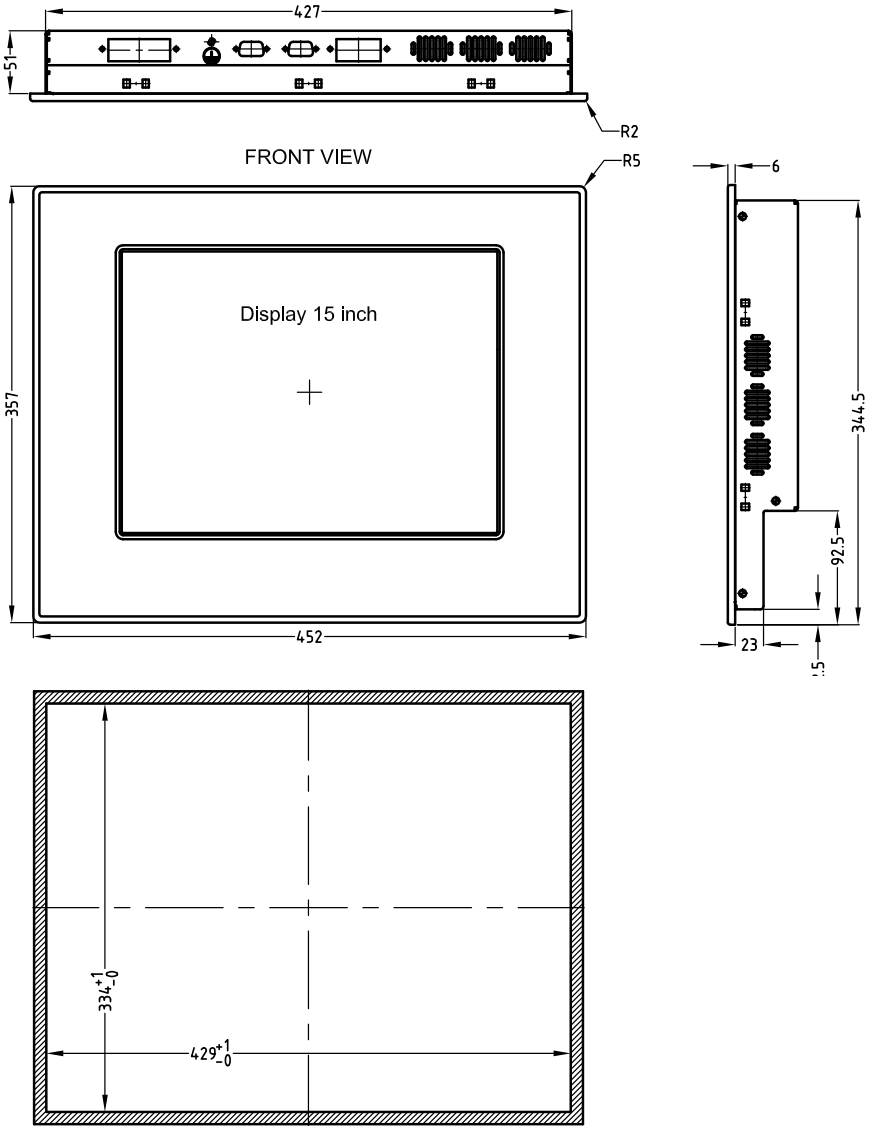

MT T190

TECHNICAL DATA - MT T190 (for further data, see page 3.2)	
Front panel	
Size in inches	19”
Resolution in pixels	1280 x 1024
Coloration	16 million colors TFT
Power supply	
Power consumption	max. 3.0 A
Interfaces	
USB	Front USB (optional)
General information	
External dimensions in mm W x H x D	480 x 377 x 90
Panel profile in W x H in mm	455 x 352
Weight	ca. 8.0 kg
Order information	
Description of item	MT T190

Dimensional drawings in mm

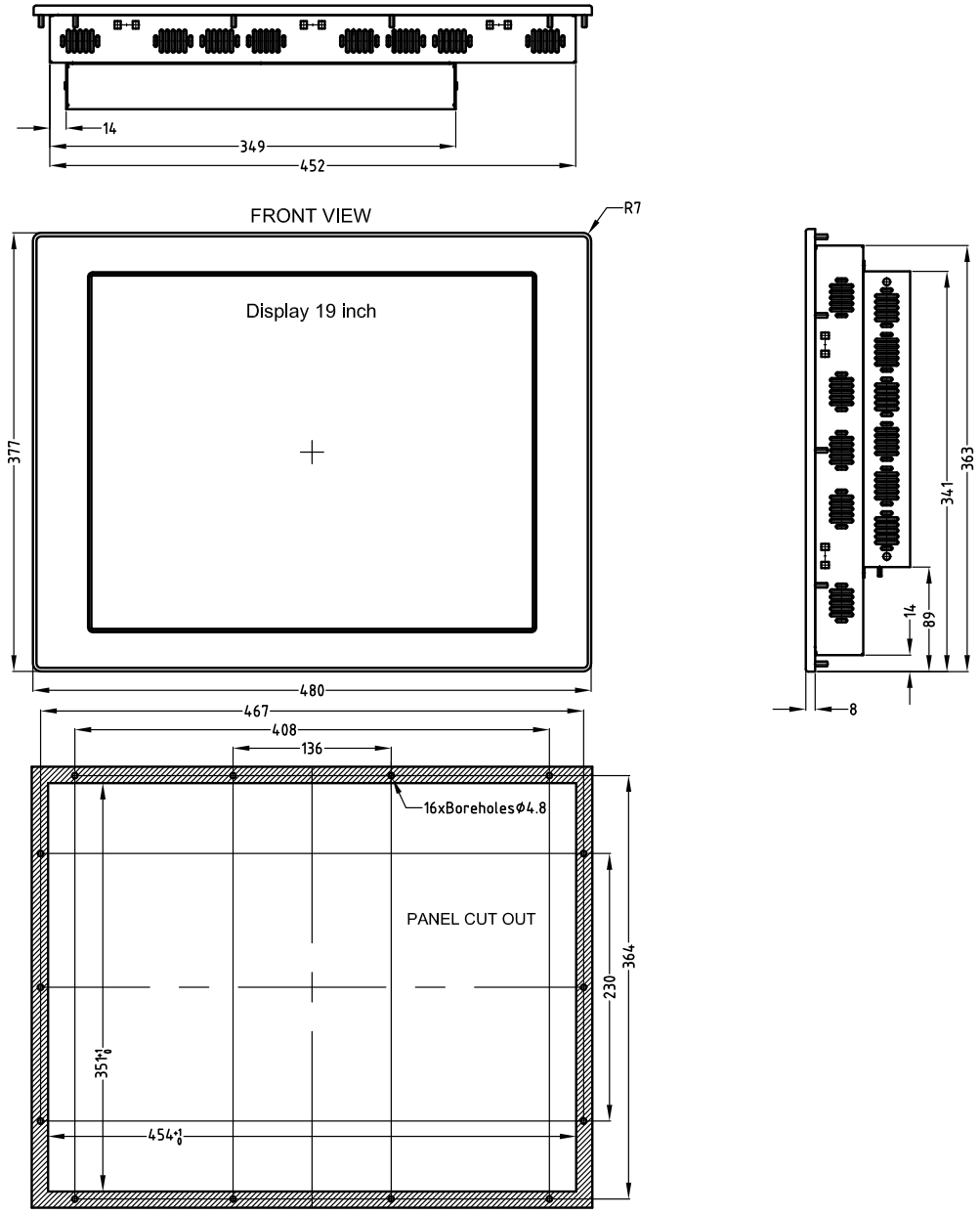

DT150

TECHNICAL DATA - DT T150 (for further data, see page 3.2)	
Front panel	
Size in inches	15.1"
Resolution in pixels	1024 x 768
Coloration (depending on the display)	64,000 colors TFT
Degree of protection	IP 66 front-mounted
Power supply	
Operating voltage	12 VDC
Power consumption	max. 2.25 A
Interfaces	
Input	USB
General information	
External dimensions in mm W x H x D	398 x 304 x 56
Panel profile in W x H in mm	354 x 277
Weight	ca. 3.7 kg
Order information	
Description of item	DT150

Dimensional drawings in mm

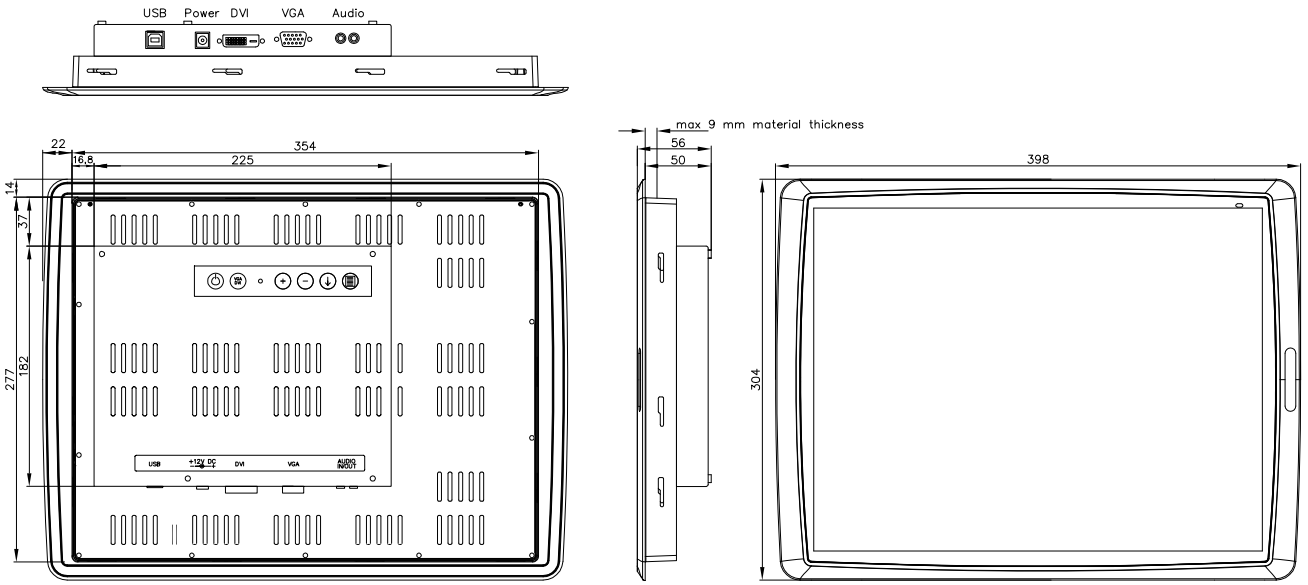

Cut out
355.5±1 x 278.5±1 mm
(14±0.04 x 10.96±0.04 inch)

EXTER operator panel - Top functionality in an elegant design

The EXTER product group offers high-performance operator panels which can be used in almost all production processes. Typical applications are machine visualization on site with networking to a guidance system, or production processes that require a convincing user interfaces.
Choose from a variety of devices, all equipped with keypads or touch screens with 3- to 15-inch displays. A selection that offers the right model for almost any application.

Reliability in all environments

The EXTER series products come into use when intuitive operation and ergonomic design is required. From pure installations to food production to even transport equipment, packaging plants or water treatment and offshore applications, these compact panels can be relied on to do their job anywhere. With their low installation depth, they can be used in the most restrictive of areas, such as the operator panel or directly in the machine. The background lighting is 100 % dimmable. And with an IP66 protection rating for the front panel, jets of water have little effect.

Projection made easy

With the Information Designer, impressive user interfaces are created quickly and efficiently for the entire EXTER series. Finished masks and graphic objects are integrated into the interface through simple drag and drop. The Designer also creates detailed documentation. This means that accompanying project documents are quickly prepared for the machine description.

EXTER means for you: A multitude of operator panels, equipped with extensive functionalities, as a comprehensive HMI solution for your special visualization tasks.

Operator panel EXTER

Characteristics

- Resistive touchscreen interface
- Text display with keypad
- IP66 degree of protection
- LAN interface
- Compact design
- Available sizes: 3" - 15"

TECHNICAL DATA - EXTER PRODUCT GROUP	
Display	
Degree of protection	IP66 / NEMA 4 front-mounted
Voltage supply	
Operating voltage	24 VDC
Power consumption	See detailed description
System	
Processor	XScale
Application memory	500 kB / 12 MB
External storage medium (CFC)	See detailed description
Operating system	Windows CE
Interfaces	
Serial	1 x RS232 1 x RS222/485
Ethernet	10/100 Mbit/s RJ45
USB	See detailed description
Communications module	Profibus DP, MPI, CAN J1939
General information	
Frame material	Aluminum
Foil	Acid-resistant polyester Foil
Operating temperature	0 to 50° C
Storage temperature	-20 to 60° C

EXTER K10

TECHNICAL DATA - EXTER K10 (for further data, see page 4.2)	
Display	
Size in inches	3.6
Resolution in pixels	160 x 32
Coloration	FSTN Monochrome
Type of data entry	Numerical keypad
Voltage supply	
Power consumption	max. 0.3 A
System	
Application memory	500 KB
External storage medium (CFC)	-
Interfaces	
Ethernet	10 Mbit/s RJ45 (as extension module)
USB	-
General information	
External dimensions in mm W x H x D	155 x 114 x 49
Panel profile in W x H in mm	121 x 80
Weight	ca. 0.9 kg
Order information	
Description of item	EXTER K10m

Dimensional drawings in mm

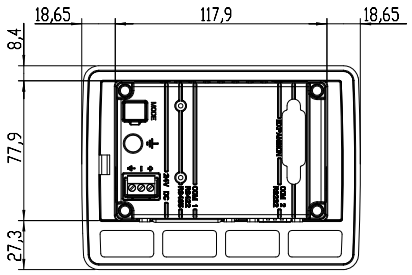

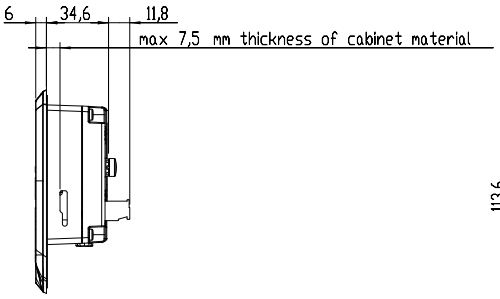

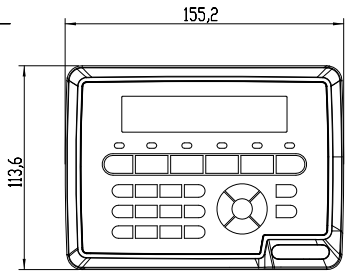

Cut out
121±1 x 80±1 mm
(4.76±0.04 x 3.15±0.04 inch)

EXTER K20

TECHNICAL DATA - EXTER K20 (for further data, see page 4.2)	
Display	
Size in inches	3.6”
Resolution in pixels	240 x 64
Coloration	FSTN monochrome
Type of data entry	Alphanumeric keypad
Voltage supply	
Power consumption	max. 0.3 A
System	
Application memory	500 KB
External storage medium (CFC)	-
Interfaces	
Ethernet	10 Mbit/s RJ45 (as extension module)
USB	-
General information	
External dimensions in mm W x H x D	155 x 155 x 50
Panel profile in W x H in mm	120 x 138
Weight	ca. 0.9 kg
Order information	
Description of item	EXTER K20m

Dimensional drawings in mm

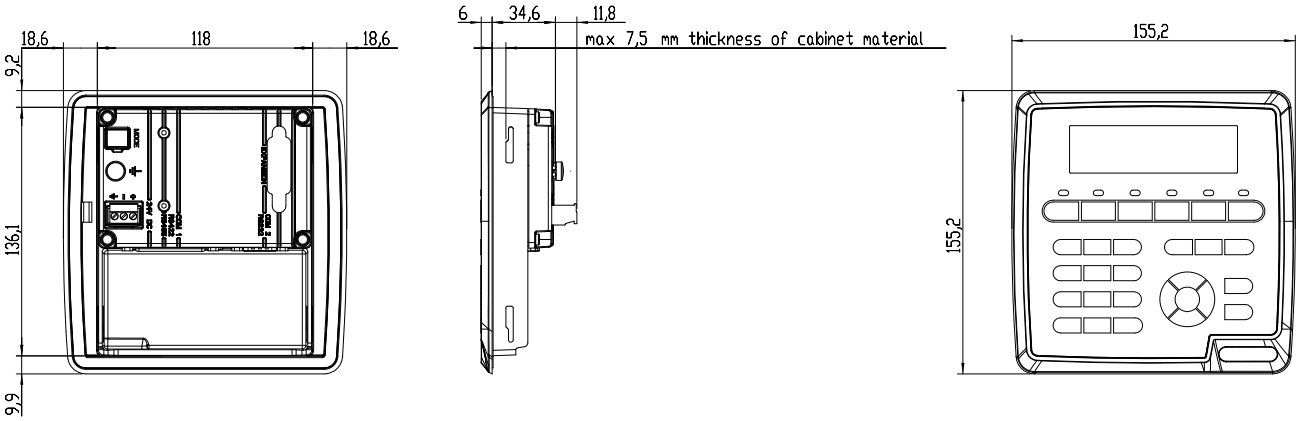

Cut out
138±1 x 120±1 mm
(5,44±0.04 x 4,73±0.04 inch)

EXTER K30

TECHNICAL DATA - EXTER K30 (for further data, see page 4.2)	
Display	
Size in inches	5.2”
Resolution in pixels	240 x 64
Coloration	FSTN monochrome
Type of data entry	Alphanumeric keypad
Voltage supply	
Power consumption	max. 0.35 A
System	
Application memory	12 MB
External storage medium (CFC)	-
Interfaces	
USB	USB host
General information	
External dimensions in mm W x H x D	202 x 187 x 63
Panel profile in W x H in mm	166 x 149
Weight	ca. 0.9 kg
Order information	
Description of item	EXTER K30m

Dimensional drawings in mm

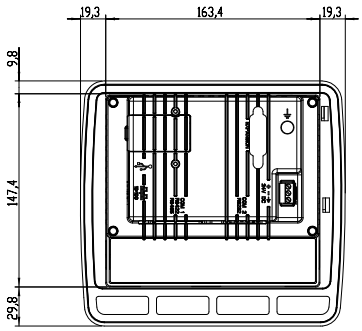

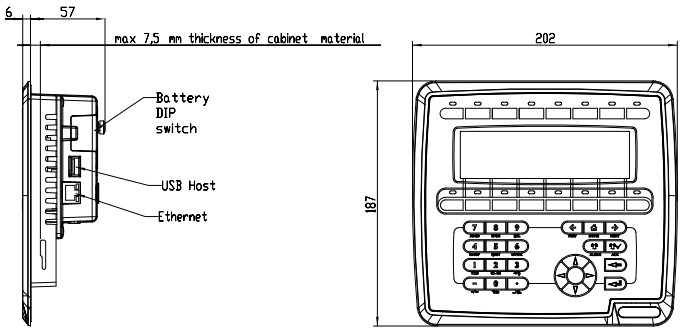

Cut out
166±1 x 149±1 mm
(6.54±0.04 x 5.87±0.04 inch)

EXTER T40

TECHNICAL DATA - EXTER T40 (for further data, see page 4.2)	
Display	
Size in inches	3.5 "
Resolution in pixels	320 x 240
Coloration	65,000 colors TFT / B/W
MTBF backlight	> 10,000 hrs
Type of data entry	Resistive touch
Voltage supply	
Power consumption	max. 0.35 A
System	
Application memory	12 MB
External storage medium (CFC)	-
Interfaces	
USB	USB host
General information	
External dimensions in mm W x H x D	155 x 119 x 63
Panel profile in W x H in mm	139 x 105
Weight	ca. 0.6 kg
Order information	
Description of item	EXTER T40 / EXTER T40m

Dimensional drawings in mm

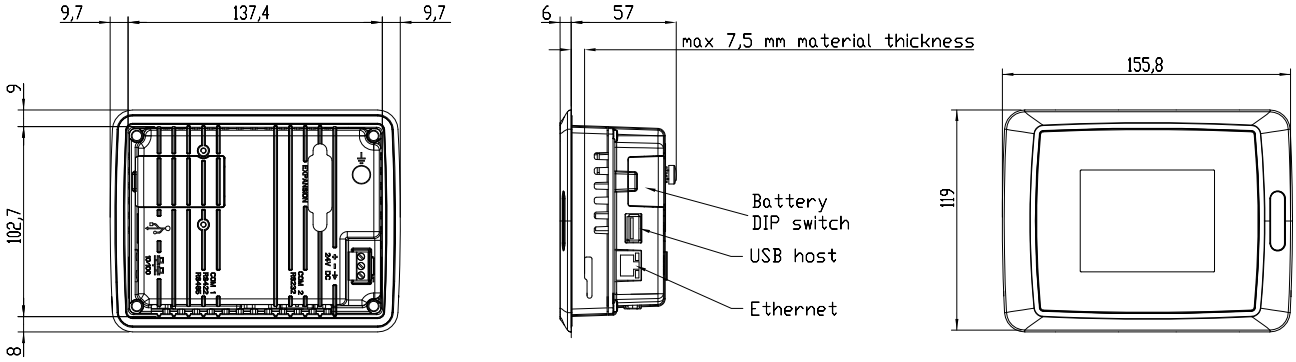

Cut out
139±1 x 105±1 mm
(5.47±0.04 x 4.13±0.04 inch)

EXTER T60

TECHNICAL DATA - EXTER T60 (for further data, see page 4.2)	
Display	
Size in inches	5.7"
Resolution in pixels	320 x 240
Coloration	65,000 colors TFT / B/W
MTBF backlight	> 40,000 hrs
Type of data entry	Resistive touch
Voltage supply	
Power consumption	max. 0.45 A
System	
Application memory	12 MB
External storage medium (CFC)	-
Interfaces	
USB	USB host
General information	
External dimensions in mm W x H x D	201 x 152 x 63
Panel profile in W x H in mm	180 x 130
Weight	ca. 0.9 kg
Order information	
Description of item	EXTER T60 / EXTER T60m

Dimensional drawings in mm

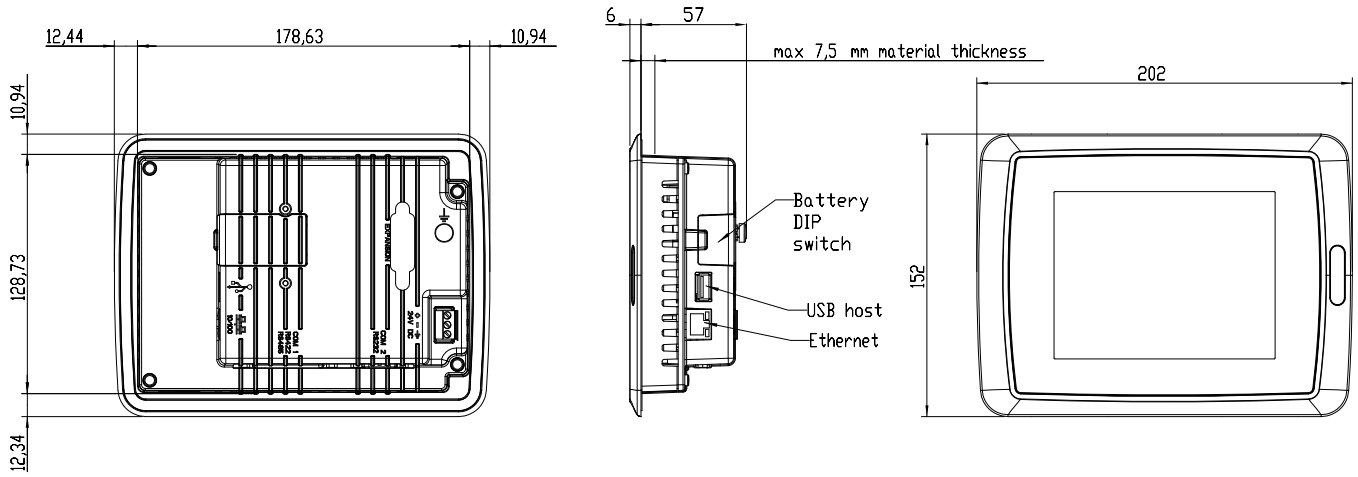

Cut out
180±1 x 130±1 mm
(7.09±0.04 x 5.12±0.04 inch)

EXTER T70

TECHNICAL DATA - EXTER T70 (for further data, see page 4.2)	
Display	
Size in inches	6.5"
Resolution in pixels	640 x 480
Coloration	65,000 colors TFT
MTBF backlight	> 40,000 hrs
Type of data entry	Resistive touch
Voltage supply	
Power consumption	max. 0.9 A
System	
Application memory	12 MB
External storage medium (CFC)	yes
Interfaces	
USB	USB host
General information	
External dimensions in mm W x H x D	219 x 154 x 61
Panel profile in W x H in mm	189 x 138
Weight	ca. 1.3 kg
Order information	
Description of item	EXTER T70

Dimensional drawings in mm

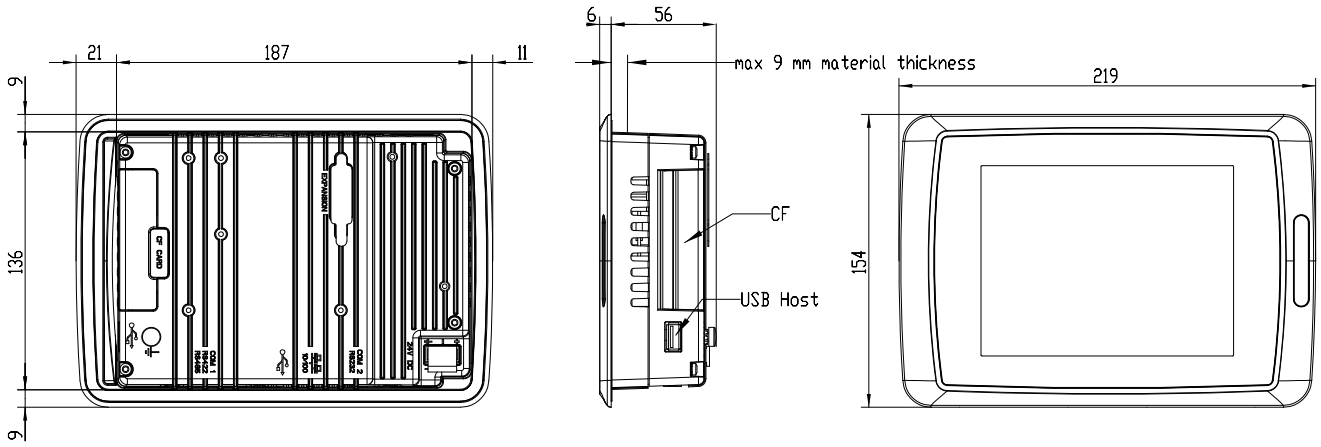

Cut out
188.5±1 x 137.5±1 mm
(7.42±0.04 x 5.41±0.04 inch)

EXTER T100

TECHNICAL DATA - EXTER T100 (for further data, see page 4.2)	
Display	
Size in inches	10.4"
Resolution in pixels	800 x 600
Coloration	65,000 colors TFT
MTBF backlight	> 40,000 hrs
Type of data entry	Resistive touch
Voltage supply	
Power consumption	max. 1 A
System	
Application memory	12 MB
External storage medium (CFC)	yes
Interfaces	
USB	USB host
General information	
External dimensions in mm W x H x D	302 x 228 x 64
Panel profile in W x H in mm	265 x 206
Weight	ca. 2.5 kg
Order information	
Description of item	EXTER T100

Dimensional drawings in mm

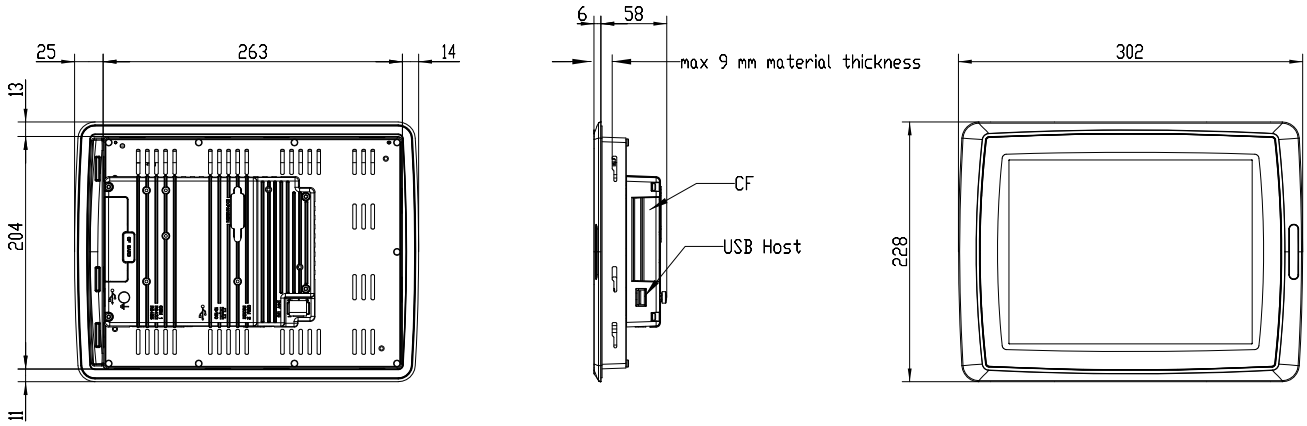

Cut out
264.5±1 x 206±1 mm
(10.4±0.04 x 8.1±0.04 inch)

EXTER T150

TECHNICAL DATA - EXTER T50 (for further data, see page 4.2)	
Display	
Size in inches	15"
Resolution in pixels	1024 x 768
Coloration	65,000 colors TFT
MTBF backlight	> 40,000 hrs
Type of data entry	Resistive touch
Voltage supply	
Power consumption	max. 1.7 A
System	
Application memory	12 MB
External storage medium (CFC)	yes
Interfaces	
USB	USB host
General information	
External dimensions in mm W x H x D	398 x 304 x 66
Panel profile in W x H in mm	356 x 279
Weight	ca. 4 kg
Order information	
Description of item	EXTER T150

Dimensional drawings in mm

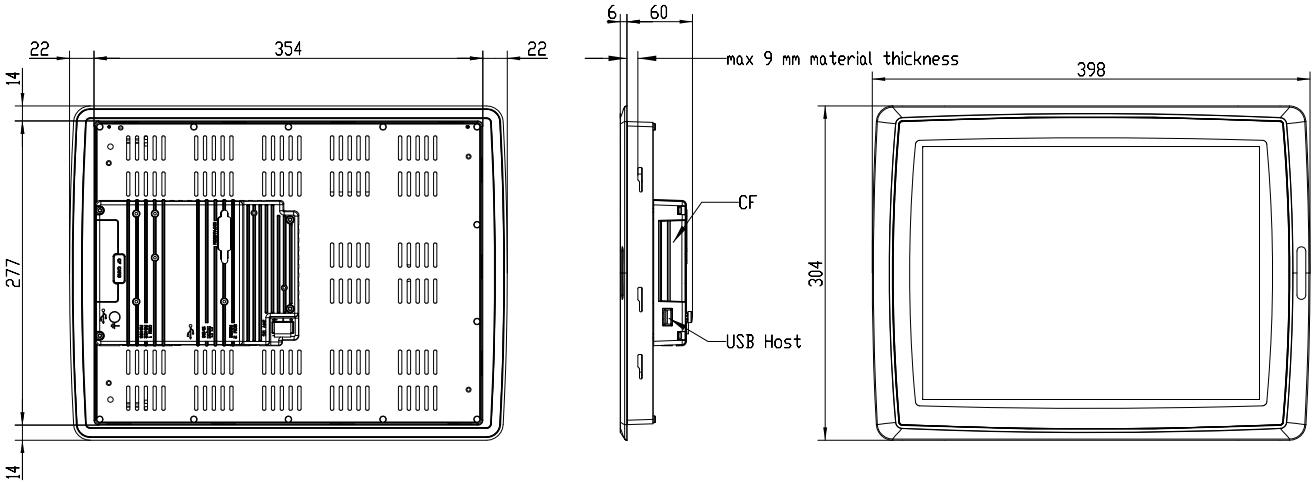

Cut out
355.5±1 x 278.5±1 mm
(14±0.04 x 10.96±0.04 inch)

H series operator panel - Compact operation at a small price

The H-series operator panels can be used anywhere essential operating functionalities are required. Customers only pay for the features that they need for their applications. With an ideal price/performance ratio, these products help reduce the costs for machine operation, in serial machines for example. The graphic operator panels demonstrate their strengths for smaller and medium sized applications, such as mobile packers, industrial washing machines and baking ovens, die casting systems, automated soldering machines and other small machines.

Fits everywhere

The H-series products include panels with keypads and touchscreen entry in six different sizes between 3 to 10.4 inch display size. Thanks to their compact dimensions and low installation depth, the panels are also suitable for use in restricted spaces such as to the front of the operator console or directly in the machine.

The versatile panels are brought to life with the help of the H Designer, an intuitively used project planning tool with a broad functional scope and comprehensive object library. Thanks to flexible help programs that facilitate project creation in just a few minutes the H Designer is the perfect tool for simple to intermediate applications.

Grows with requirements

A large number of communication drivers allow for the easy connection to almost any conventional control system. Currently, there are more than 100 different driver protocols for PLC's, frequency converters and servo controllers available. The extended network version boasts a larger memory for the data/recipe handling, a printer port and an additional USB host and device connection. Using the integrated CF card slot, an external backup of the log and recipe memory is possible.

Operator panel H-series

Characteristics

- Economical visualization
- Resistive touchscreen interface
- Compact design
- Real-time clock
- Low installation depth
- Available sizes: 3" - 10"

TECHNICAL DATA - H-series PRODUCT GROUP	
Display	
Degree of protection	IP65 / NEMA 4
Voltage supply	
Operating voltage	24 VDC +/- 15%
System	
Processor	ARM
Main memory	See detailed description
External storage medium (CFC)	See detailed description
Interfaces	
Serial	RS232/422/485
Ethernet	See detailed description
USB	See detailed description
General information	
Foil	Acid-resistant polyester Foil
Operating temperature	0 to 50° C
Storage temperature	-20 to 60° C

H-K30

TECHNICAL DATA - H-K30 (for further data, see page 5.2)	
Display	
Size in inches	3"
Resolution in pixels	160 x 80
Coloration	STN-LCD-B/W
Type of data entry	Alphanumeric keypad
Voltage supply	
Power consumption	0.34 A
System	
Main memory	4 MB
External storage medium (CFC)	-
Interfaces	
Serial	RS232/422/485
Ethernet	-
USB	-
General information	
External dimensions in mm W x H x D	173 x 106 x 52
Panel profile in W x H in mm	161 x 94
Weight	ca. 0.37 kg
Order information	
Description of item	H-K30m-S

Dimensional drawings in mm

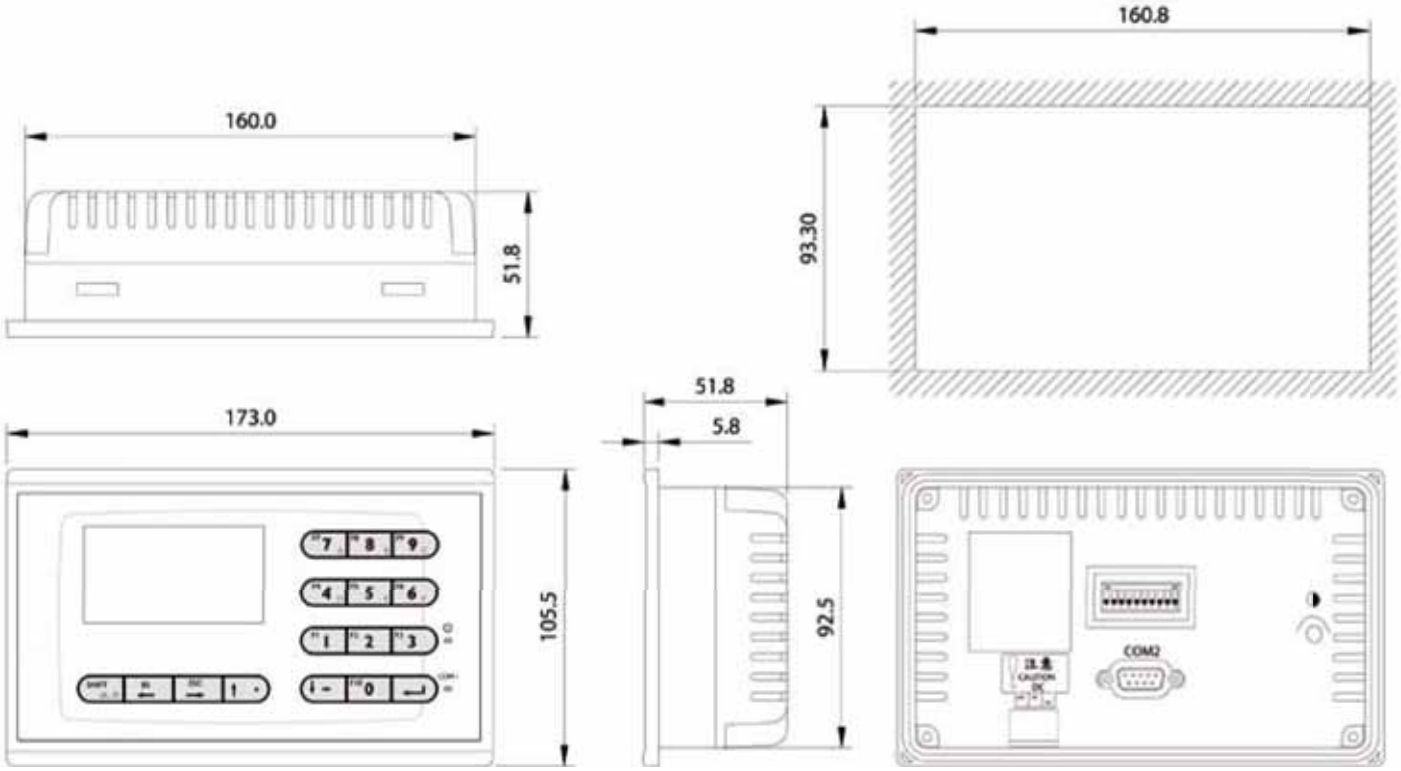

H-T40

TECHNICAL DATA - H-T40 (for further data, see page 5.2)	
Display	
Size in inches	3.5"
Resolution in pixels	240 x 240
Coloration	FSTN B/W
Type of data entry	Resistive touch
Voltage supply	
Power consumption	0.17 A
System	
Main memory	4 MB
External storage medium (CFC)	-
Interfaces	
Serial	RS232/422/485
Ethernet	-
USB	-
General information	
External dimensions in mm W x H x D	96 x 96 x 41
Panel profile in W x H in mm	90 x 90
Weight	ca. 0.21 kg
Order information	
Description of item	H-T40m-S / H-T40m-P

Dimensional drawings in mm

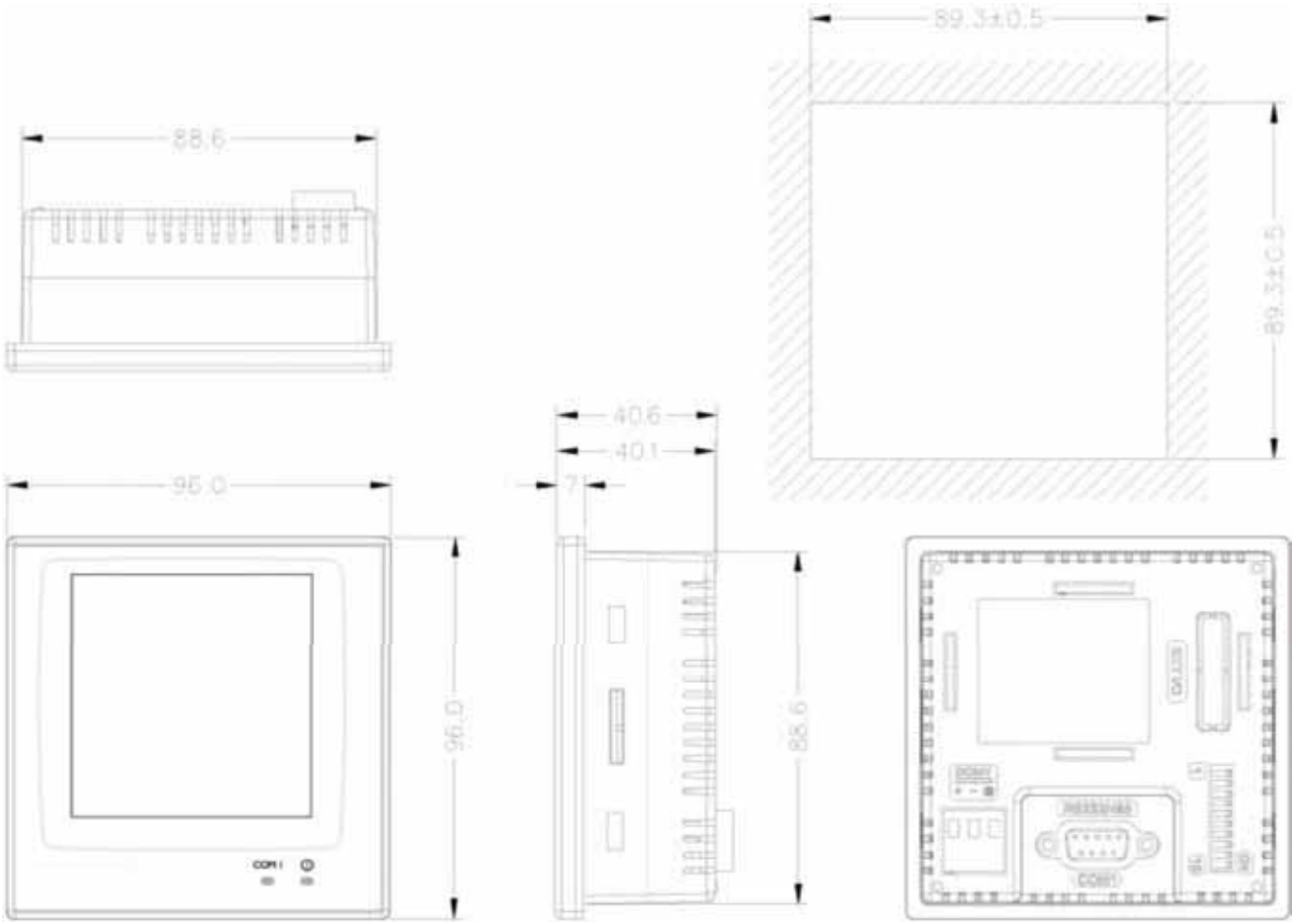

H-T50

TECHNICAL DATA - H-T50 (for further data, see page 5.2)	
Display	
Size in inches	4.7”
Resolution in pixels	240 x 128
Coloration	STN-LCD-blue
Type of data entry	Resistive touch
Voltage supply	
Power consumption	0.5 A
System	
Main memory	4 MB
External storage medium (CFC)	-
Interfaces	
Serial	2x RS232/422/485
Ethernet	-
USB	-
General information	
External dimensions in mm W x H x D	171 x 103 x 46
Panel profile in W x H in mm	161 x 93
Weight	ca. 0.47 kg
Order information	
Description of item	H-T50b-S

Dimensional drawings in mm

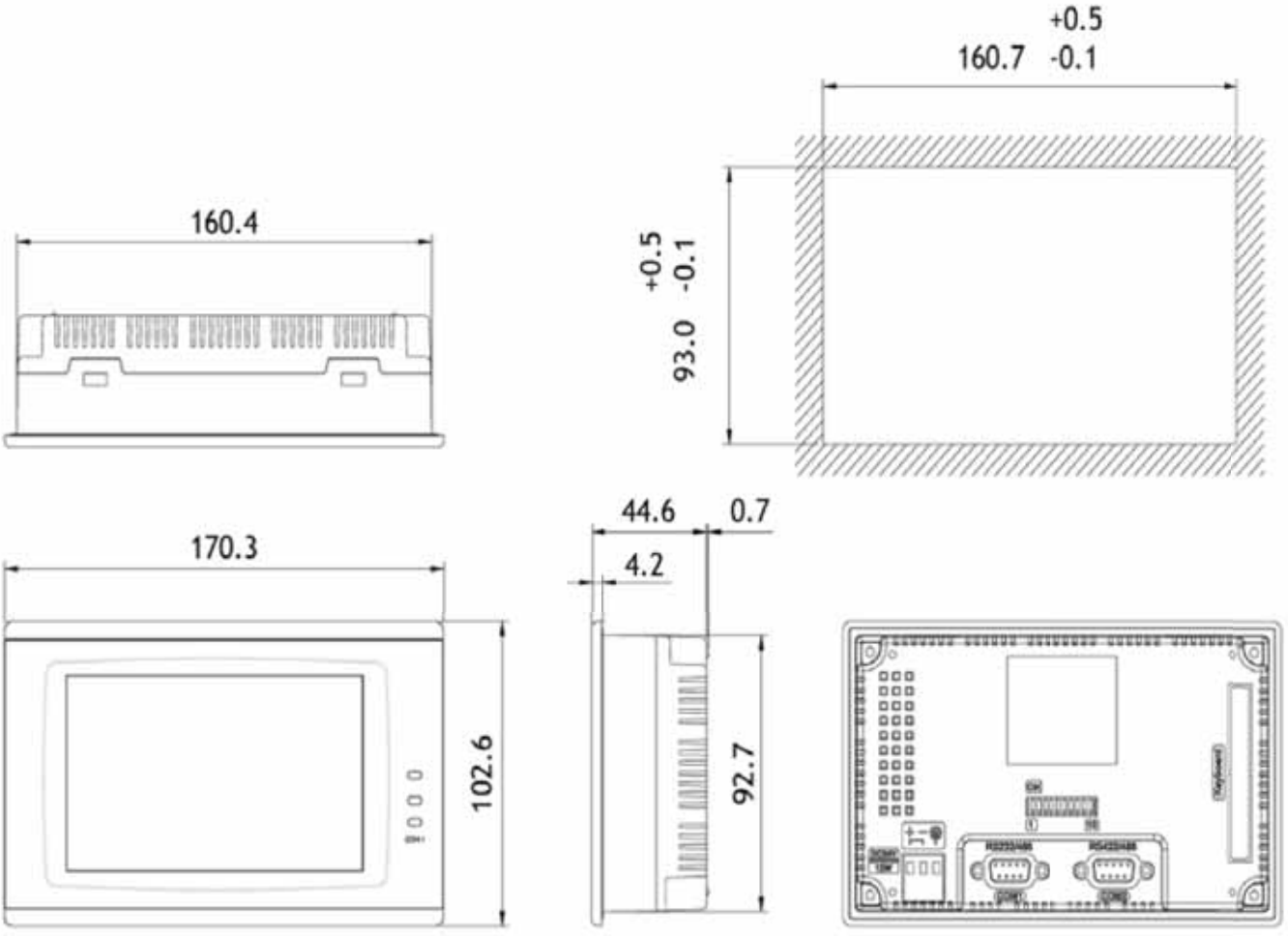

H-T60

TECHNICAL DATA - H-T60 (for further data, see page 5.2)	
Display	
Size in inches	5.7”
Resolution in pixels	320 x 240
Coloration	TFT LCD color display
Type of data entry	Resistive touch
Voltage supply	
Power consumption	0.84 A
System	
Main memory	4 MB
External storage medium (CFC)	yes
Interfaces	
Serial	2x RS232/422/485
Ethernet	10/100 Mbit/s
USB	USB host / USB device
General information	
External dimensions in mm W x H x D	195 x 145 x 60
Panel profile in W x H in mm	186 x 136
Weight	ca. 0.86 kg
Order information	
Description of item	H-T60t-Ne

Dimensional drawings in mm

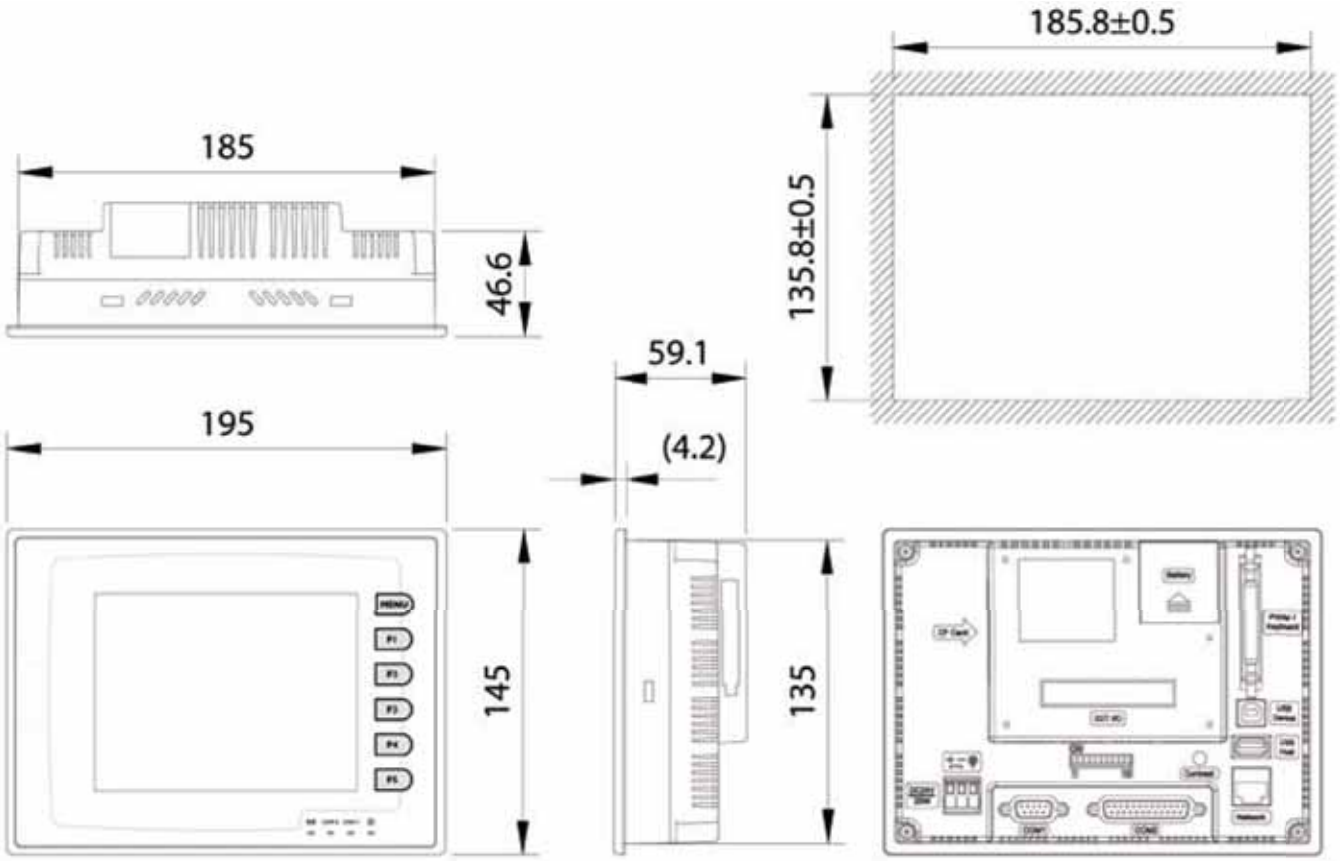

H-T70

TECHNICAL DATA - H-T70 (for further data, see page 5.2)	
Display	
Size in inches	7”
Resolution in pixels	800 x 480
Coloration	TFT LCD color display
Type of data entry	Resistive touch
Voltage supply	
Power consumption	1.0 A
System	
Main memory	8 MB
External storage medium (CFC)	yes
Interfaces	
Serial	3x RS232/422/485
Ethernet	10/100 Mbit/s
USB	2x USB host / USB device
General information	
External dimensions in mm W x H x D	231 x 176 x 47
Panel profile in W x H in mm	221 x 166
Weight	ca. 1.2 kg
Order information	
Description of item	H-T70t-Ne

Dimensional drawings in mm

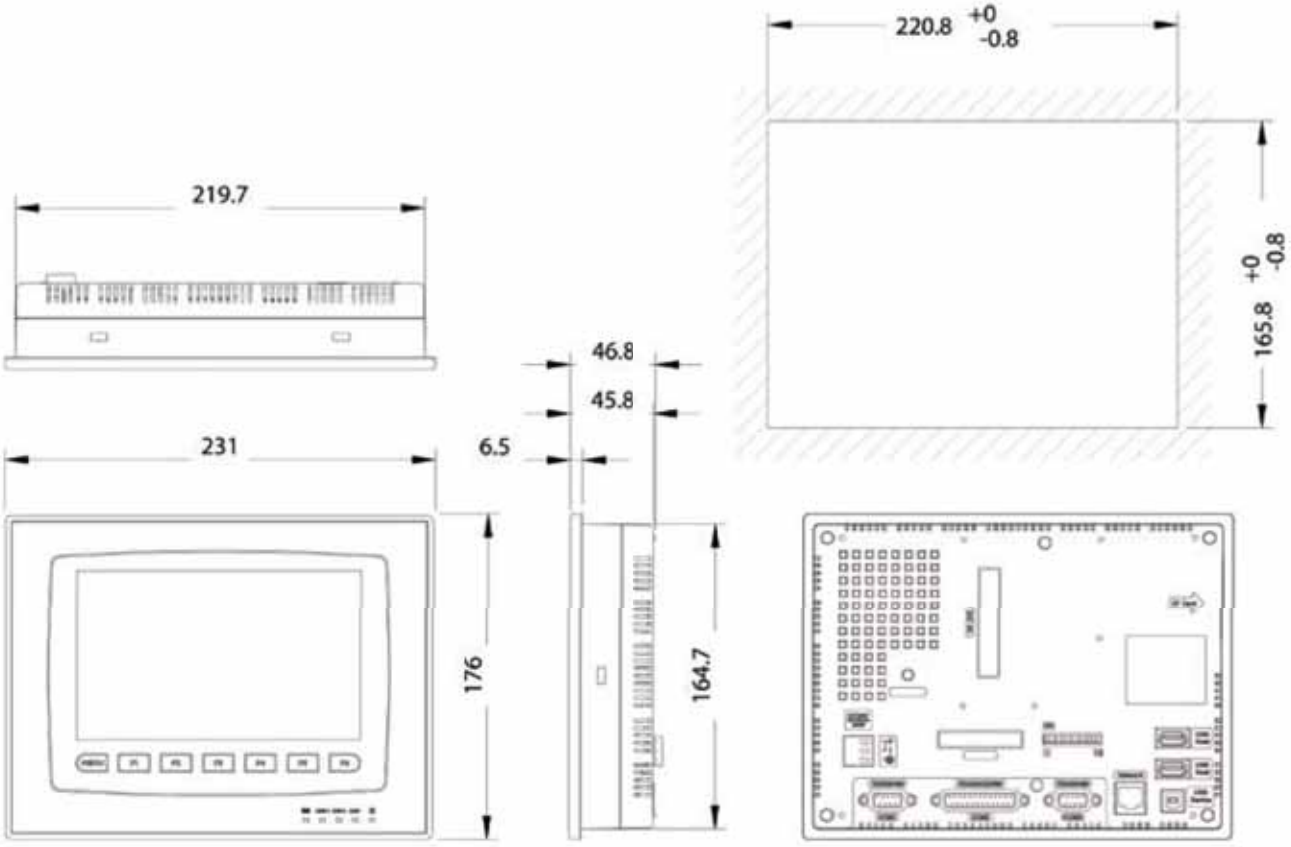

H-T80

TECHNICAL DATA - H-T80 (for further data, see page 5.2)	
Display	
Size in inches	7.5”
Resolution in pixels	640 x 480
Coloration	STN-LCD color display
Type of data entry	Resistive touch
Voltage supply	
Power consumption	1.25 A
System	
Main memory	8 MB
External storage medium (CFC)	yes
Interfaces	
Serial	3x RS232/422/485
Ethernet	10/100 Mbit/s
USB	2x USB host / USB device
General information	
External dimensions in mm W x H x D	231 x 176 x 46.8
Panel profile in W x H in mm	220.8 x 165.8
Weight	ca. 1.2 kg
Order information	
Description of item	H-T80c-Ne

Dimensional drawings in mm

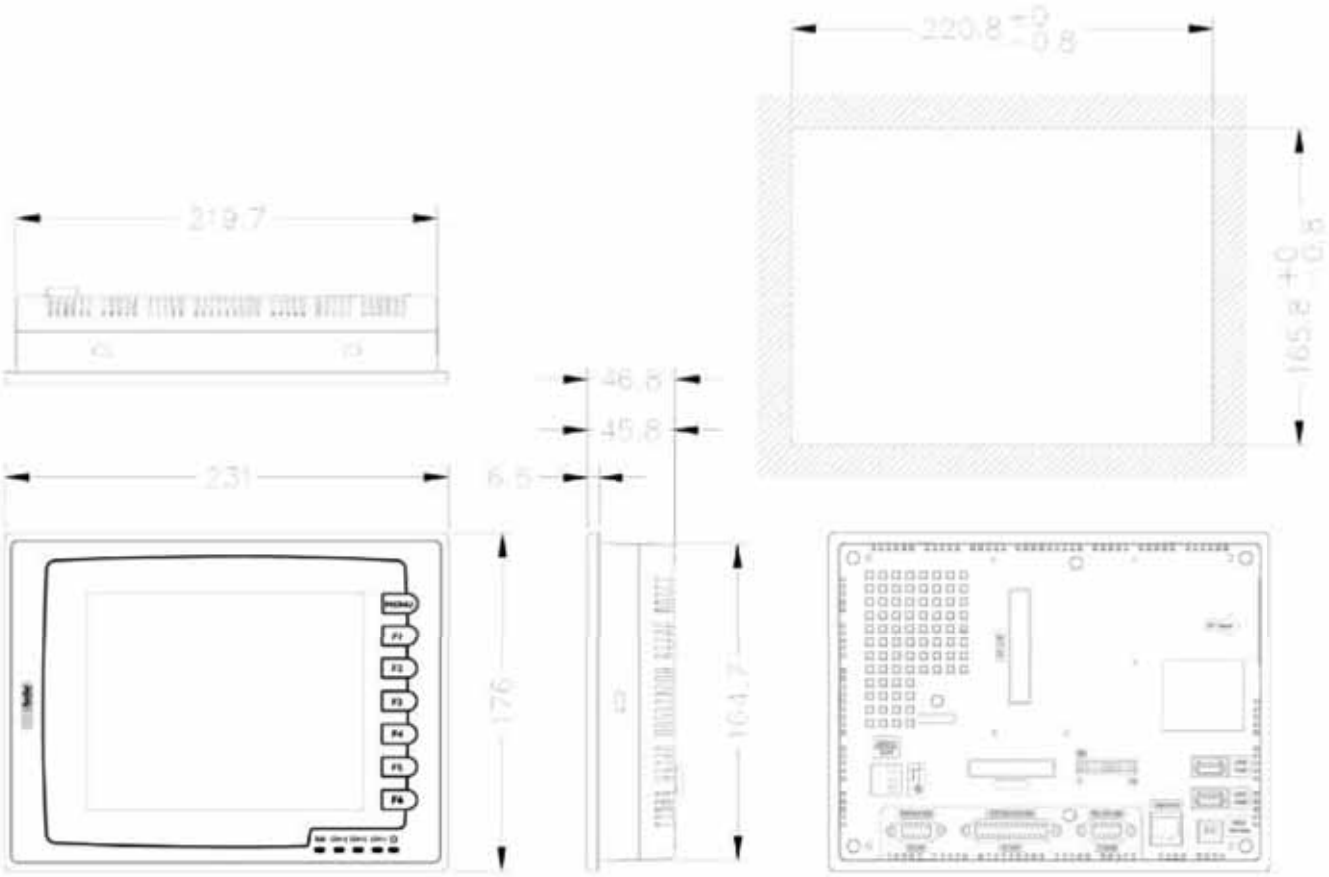

H-T100

TECHNICAL DATA - H-T100 (for further data, see page 5.2)	
Display	
Size in inches	10.4”
Resolution in pixels	640 x 480
Coloration	TFT LCD color display
Type of data entry	Resistive touch
Voltage supply	
Power consumption	1.25 A
System	
Main memory	8 MB
External storage medium (CFC)	yes
Interfaces	
Serial	3x RS232/422/485
Ethernet	10/100 Mbit/s
USB	2x USB host / USB device
General information	
External dimensions in mm W x H x D	297 x 222 x 53
Panel profile in W x H in mm	286 x 211
Weight	ca. 1.9 kg
Order information	
Description of item	H-T100t-Ne

Dimensional drawings in mm

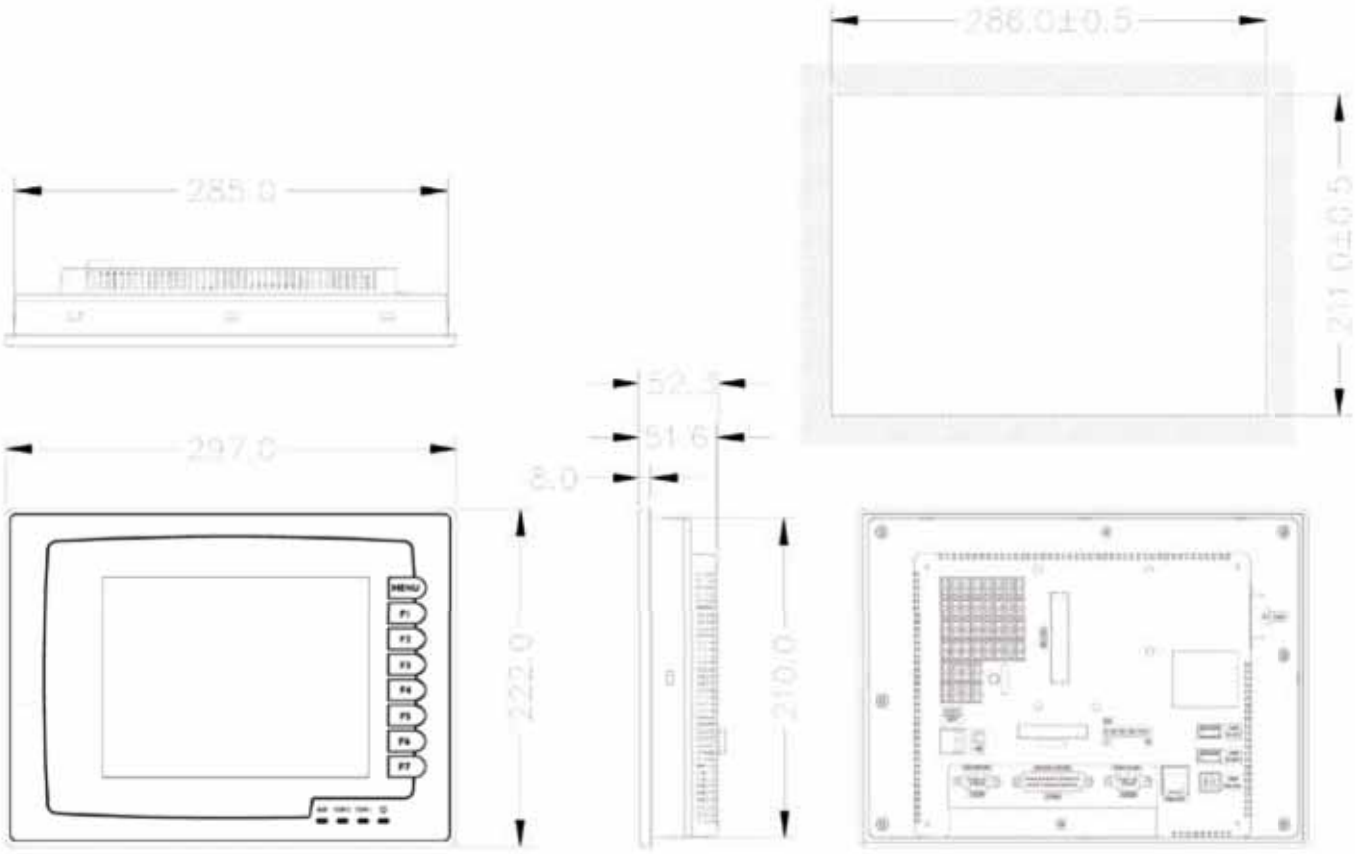

Industrial solutions

What is required of machine controls and operator panels is as varied as the applications themselves. In addition to the standard mounted operator console and control cabinet, there is huge demand for further installation options covering every kind of industry. This may be the "open frame panel" for rear installation, the special stainless steel fronts with planar surface or the mobile input devices for all-round operation of production processes. They each have their own special properties which the operator can use for a clear visualization of the plant.

Beijer Electronics, as the world's largest independent HMI specialist, provides comprehensive industry solutions which optimally meet the requirements of the respective environments, as well as generate crucial competitive advantages. But don't just take our word for it, see for yourself how our devices can best meet your particular requirements.

Industrial PC Open Frame

Characteristics

- TFT color display
- Resistive touch
- Noiseless
- Operating voltage
  24 VDC internal
- Suitable for wall mounting
- Passively cooled
- Without rotating media
- Available sizes:
  10", 12", 15"

TECHNICAL DATA EPC LX - OF	
Front panel	
Size in inches	10.4"; 12.1"; 15"
Resolution in pixels	depends on display size
Type of data entry	Resistive touch
Degree of protection	Front: IP 20/54 (with/without front frame)
Power supply	
Operating voltage	24 VDC +/- 20%
Power consumption	ca. 0.7 - 1.0 A
System	
Processor	AMD LX 800
Main memory	256 / 1,024 MB
External storage medium (CFC)	2 - 8 GB
Internal mass memory (CFC)	2 - 8 GB
Operating system	Windows CE.NET, Windows XP embedded
Interfaces	
Serial	RS232
Ethernet	2 x 10/100 Mbit/s
Keypad / Mouse	1 x PS/2
Monitor	VGA
USB	2 x USB 2.0 front-mounted
Slots	-
Communications module	-
General information	
Frame material	Aluminum
Foil	Depends on individual front frame
Operating temperature	0 to ca. 50°C open, 0 to 35°C with wall insert
Storage temperature	-20 to 60° C

Mobile panel- EXTER M70

Characteristics

- TFT color display
- Control keys
- Mobile machine operation
- Grip for left- and right-handed users
- 3x acknowledgement key on reverse
- Emergency button to front
- Impact-resistant frame material

TECHNICAL DATA - EXTER M70	
Display	
Size in inches	6.5
Resolution in pixels	640 x 480
Coloration	65,536 colors TFT
Type of data entry	Resistive touch + keypad
Degree of protection	IP 65 on front in accordance with DIN EN60529
Voltage supply	
Operating voltage	24 VDC +/- 20%
Power consumption	ca. 500 mA
System	
Processor	XScale
Main memory	12 MB
Storage medium (CFC)	-
Operating system	Windows CE.net
Interfaces	
Serial	RS232
Ethernet	10 Mbit/s
USB	USB host
Communications module	-
General information	
Frame material	Double-walled ABS
Foil	ABS
Outer dimensions in mm W x H x D	Ø 250 x 114
Panel profile in mm WxH	-
Weight	ca. 1.25 kg
Operating temperature	0 to 50° C
Storage temperature	-20 to 70° C

Hygiene solutions

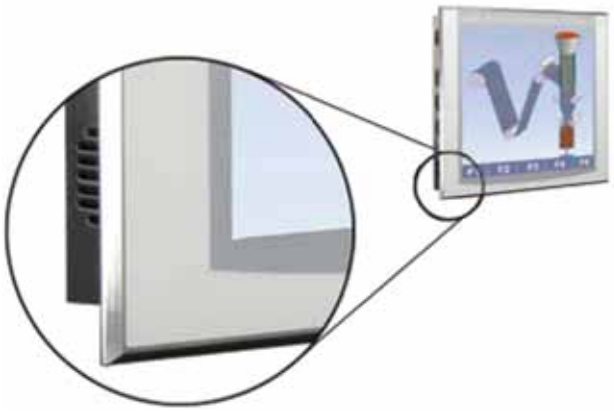

Characteristics

- Choice between operator panel, PC and monitor
- Hygienic stainless steel frame
- Planar surface
- Resistive touchscreen
- Available display sizes: 15" and 19"

TECHNICAL DATA			
Display	**EXTER T150**	**EPC C2D**	**MT**
Size in inches	15”	19”	19”
Resolution in pixels	1024 x 768	1280 x 1024	1280 x 1024
Coloration	TFT color display		
Type of data entry	Resistive touch		
Degree of protection	IP66 front-mounted; IP 20 rear-mounted	IP65 front-mounted; IP 20 rear-mounted	
Voltage supply			
Operating voltage	24 VDC (20-30V)	24 VDC +/- 15%, optional 230 VAC +/- 15%	
Power consumption	max. 1.7 A	ca. 4.0 A / 1.0 A	
System			
Processor	XScale	C2D 2.2 GHz	-
Main memory	12 MB	2 GB / 4 GB	-
Storage medium (CFC)	-	SSD / HDD (SATA) or CFC	-
Operating system	Windows CE.net	Win XP, XP embedded	-
Interfaces			
Serial	2 x RS232 / RS422 / RS485	2 x RS232	-
Ethernet	10/100 Mbit/s	2 x GLAN 10/100/1000	-
USB	USB host / USB device	4 x USB 2.0	USB Touch
Monitor	-	VGA, DVI	VGA + DVI
Keypad / Mouse	-	2 x PS-2	-
Communications module	Profibus optional	MPI, Profibus, CAN optional	-
General information			
Frame material	Stainless steel		
Foil	-	Acid-resistant polyester Foil	
Operating temperature	0 to 50° C		0 to 45° C
Storage temperature	-20 to 60° C		

INDUSTRIES

National and international companies from the most diverse industries build on the products, the know-how and support from Beijer Electronics. Beijer Electronics' innovative products are used in the following industries:

Machine construction

Automobile manufacturing

Packaging technology

Automotive

Textile industry

Pharmaceutical & Food

Assembly technology

Industry automation

Shipping automation

Off shore plants

Water supply technology

Environmental technology

Plastics processing

Machine tool manufacturing

Conveyor technology

Energy

Headoffice
Beijer Electronics AB
Box 426
201 24 Malmö, Schweden
Tel.: +46 40 358600
www.beijerelectronics.com

EMEA
Beijer Electronics GmbH & Co. KG
Kelterstraße 59
72669 Unterensingen, Deutschland
Tel.: +49 (0) 7022 9660 0
info@beijerelectronics.de

USA
Beijer Electronics Inc.
939 N. Plum Grove Road, Suite F
Schaumburg IL 60173, USA
Tel. +1 847 619 6068
Fax +1 847 619 6674
info.usa@beijerelectronics.com

CHINA
Beijer Electronics Co. Ltd.
Room 201, Building B, No. 1618,
Yishan Road, Shanghai 201103, China
Tel. +86 21 6145 0400
Fax: +86 21 6145 0499
info@beijerelectronics.cn

TAIWAN R.O.C.
Beijer Electronics Corp.
7 & 8 F, No 108 Min-Quan Road.
Shin-Tien, Taipei Shien, Taiwan, R.O.C.231
Tel. +886-2-2218-3600
Fax +886-2-2218-9547
info@beijerelectronics.com.tw

About Beijer Electronics

Beijer Electronics is a fast growing technology company with extensive experience of industrial automation and robust data communication, developing and marketing competitive products and solutions with focus on the user. Since its start-up in 1981, Beijer Electronics has evolved into a multinational group present in 16 countries and sales of 110 Mio. € in 2009. The company is listed on the Nasdaq OMX Nordic Exchange Stockholm's Small Cap list under the ticker BELE.

Further information can be found at www.beijerelectronics.com.

Beijer ELECTRONICS

Headoffice
Beijer Electronics AB
Box 426
201 24 Malmö, Schweden
www.beijerelectronics.com
+46 40 358600

Order nr: BREN508B
Copyright © 2010 Beijer Electronics. All rights reserved.

The information provided here corresponds to the most up-to-date information at the time of print. Beijer Electronics reserves the right to change any information without updating this publication. Beijer Electronics shall assume no responsibility for errors or omissions in this publication.